Beamline Enabling: Phase 3

Project Manual & Specifications

November 17th, 2023

Owner

Cornell University
Ithaca, New York 14853

Architect

SWBR
387 East Main Street
Rochester, New York 14604

TECHNICAL SPECIFICATIONS

DIVISION 26 — ELECTRICAL

DIVISION 27 — COMMUNICATIONS

DIVISION 28 — ELECTRONIC SAFETY AND SECURITY

DRAWINGS

END OF DOCUMENT

INSTRUCTIONS TO BIDDERS

Project:	Beamline Enabling: Phase: 3
Owner:	Cornell University Ithaca, New York 14853
Architect:	SWBR 387 East Main Street Rochester, New York 14604

1. BID DOCUMENTS

The Bid Documents provided electronically by the Owner will consist of the following:

(1) Instructions to Bidders.

(2) Bid Proposal Certification Form.

(3) General Conditions of the Contract and Division 1 - "General Requirements", and Supplemental Conditions.

(4) Drawings and Specifications.

(5) Addenda and/or bulletins issued prior to date of opening of Proposals.

Bid Documents are available electronically in the eBuilder Bid Portal under the Bid Package Invitation – Invitation Documents Tab.

Dataflow, Inc. maintains the current set of Documents and all addenda and is the contracted supplier for printed plans and specifications for this project. Contact Dataflow at CUProjects@goDataflow.com.

Bid Documents Terms of Use / Disclaimer - By accessing and/or using the Cornell University Document Files, You accept without limitation or qualifications, the following Terms of Use:

a. Cornell University grants You the permission to use and view the Document Files subject to these Terms of Use.

b. Except in connection with preparing your bid, You may not modify, copy, transmit, display, reproduce, publish, license, create derivative works from, transfer, or sell any information, materials, drawings, content, products or services from the Document Files (together "Content") in any form without Cornell University's prior written permission. You may print out a copy or download Content solely for Your internal use. In doing so, you may not remove or alter, or cause to be removed or altered, any copyright, trademark, trade name, service mark, or any other proprietary notice or legend appearing on any of the Content.

c. You may not provide parts of or full sets of Document Files to any planhouse or online document repositories.

d. The trademarks, logos, and service marks (collectively the "Trademarks") displayed on the Document Files are registered and unregistered Trademarks of Cornell University and others. Nothing contained on the Document Files should be construed as granting, by implication, estoppel, or otherwise, any license or right to use any Trademark displayed on the Document Files without the written permission of Cornell University or such party that may own the Trademark. Your use of the Trademarks displayed on the Document Files, or any other content, except as provided in these Terms of Use, are strictly prohibited.

2. EXAMINATION OF SITE AND CONTRACT DOCUMENTS

a. Each Bidder shall acquaint themselves with location conditions as they exist, as well as the character of the necessary work to be carried out under the proposed Contract. A Pre-Bid Zoom meeting will be scheduled and include: a review of project related information, an opportunity to ask and receive responses to Bidder questions, and make such inquiries as are necessary to fully understand the subject facilities, physical conditions and/or restrictions attendant to the work under the Contract.

b. Boring information, water levels, indications of sub-surface conditions and similar information given on the Drawings or in the Specifications are furnished only for the convenience of the Bidders. The Owner, Architect and Consulting Engineer make no representation regarding the character and extent of the soil data or other sub-surface conditions to be encountered during the work and no guarantee as to the accuracy or validity of interpretation of such data or conditions is made or intended.

c. Each Bidder shall also thoroughly examine and become familiar with the Drawings, Specifications and associated Bid Documents.

d. By submitting a Bid, the Bidder covenants and affirms that the Bidder has carefully examined all of the Bid Documents including Drawings, Specifications, and the Addenda and Bulletins, if any, as well as posed any questions associated with the Site, and that Bidder is satisfied as to the nature and location of the work, the general and local conditions, and all matters which may in any way affect the work or its performance.

3. DISCREPANCIES

a. Should a Bidder find discrepancies in or omissions from the Drawings, Specifications and associated Bid Documents, or be in doubt as to their meaning, Bidder shall at once enter the item in the Q&A Board of the eBuilder Bid Portal and an Addenda with written instructions will be sent to all bidders. Neither the Owner nor the Architect will be responsible for oral instructions. Every request for such interpretation should be in writing and entered into the eBuilder Bid Portal Q&A Board. Inquiries received in advance of the deadline established at the Pre-Bid conference will be given consideration.

4. PRE-BID CONFERENCE

a. A pre-bid conference has been scheduled for 10:00AM, January 3, 2024, in Room 133 of Humphreys Service Building or via Zoom at:

https://cornell.zoom.us/j/96004648497?pwd=cnlzWVJ1MFprYXA3UmxlM0diZ1BuUT09&from=addon.

A Pre-bid walkthrough will follow, please assemble at Wilson Lab Loading Dock, 161 Synchrotron Drive, Ithaca, NY.

The Pre-Bid Conference is designed to assist Bidders in understanding the Contract Documents, the opportunity to pose clarifying questions or make inquiries regarding Contract Documents. Results will be published in an Addendum.

5. BID SUBMISSION

Bid Submissions must include the following:

a. Base Bid entered into the eBuilder Portal broken down per the Bid Scope Tab Schedule of Values (Step 1: Bid Form of the Response Form tab).

b. Additional Required Information:

1. Bid Proposal Certification Form
2. Bid Bond
3. Bond Surety Company
4. Bonding Rate for Change Orders
5. Proposed Project Team and Resumes
6. Proposed Project Schedule
7. Substitutions

c. Bid Proposal Certification Form: The Bid Proposal Certification Form shall be signed by the Principal(s) or Officer(s) legally authorized to bind the Bidder, and to execute such documents on behalf of their respective firms or organizations, and the Certificates included in the Bid Proposal Certification Form shall be completed accordingly. Bidder's legal name should be fully and accurately stated. Completed form shall be without interlineation, alterations, or erasures unless initialed and dated by the signer; Owner expressly reserves the right to accept or reject any or all bids, and to waive irregularities or informalities in its sole and reasonable discretion.

d. Bid Bond: Each Bidder will be required to furnish a Bid Bond electronically via the eBuilder Bid Portal in the amount of 10% of the Bid Amount. Such Bid Bond shall guarantee that the Bidder will execute the Contract if it is awarded to him in conformity with his Proposal. Such Proposal Guarantee Bond shall include a statement that the Insurer shall, at the option of the Bidder, be willing to provide to the Bidder the Contract Bonds as described in 13 below.

6. SALES AND USE TAX EXEMPTION

a. The Owner, Cornell University, a non-profit educational institution, is exempt from payment of certain Sales and Use Taxes.

7. FEDERAL EXCISE TAX

a. The Owner, Cornell University, a non-profit educational institution, is exempt from payment of certain Federal Excise Taxes.

8. TAX EXEMPT STATUS

a. Bidders shall inform all prospective subcontractors and suppliers from whom they expect to obtain proposals or quotations of the tax-exempt status of the Owner as set forth above and request that they reflect anticipated tax credits in their proposals or quotations.

9. EXEMPTION CERTIFICATES

a. At the Contractor's request, following the award of a Contract, Contractor exempt purchase certificates will be furnished by the Owner to the Contractor with respect to such tax-exempt articles or transactions as may be applicable under the Contract.

10. TRADE SUBCONTRACTORS, MATERIAL SUPPLIERS

a. Each portion of the work shall be performed by an organization equipped and experienced to do work in that particular field, and no portion of the work shall be reserved by the Bidder to himself unless he is so equipped and experienced. Subcontracts shall be awarded only to parties satisfactory to the Owner and the Architect. Each subcontractor and materials supplier shall be approved individually.

b. In the spaces provided in the eBuilder Bid Portal Bid Scope form, the Bidder shall list all portions of the work he proposes to perform directly with his own forces.

c. A list of names from which the Bidder proposes to select subcontractors, materials suppliers, and/or manufacturers for the principal trades or subdivisions of the work is required as part of the Proposal.

d. In the Bid Scope Tab in the eBuilder Bid Portal, a list of the principal trades or subdivisions of the work for which such a listing is required, together with the provisions which govern the listing, selection and approval of principal subcontractors.

11. UNIT PRICES

The Bidder agrees, if awarded the Contract, to perform work "In addition to" or "deducted from" the scope of the Contract Documents as directed by the Owner and/or Architect, computed in accordance with the unit prices, which prices include all overhead, profit and other expense items in connection therewith, subject to the terms of the Contract Documents.

a. Certain Unit Prices may be requested. If requested, a form will be attached to these instructions and will need to be completed and uploaded to the eBuilder Bidding Portal Response Form – Step 3 – Additional Required Information Custom Fields. All Bidders are required to bid on all Unit Prices without exception.

b. All unit prices include the installation or omission, complete for each item, together with all work in connection therewith and shall include all shoring, bracing, dewatering and other incidental work.

c. Unit prices shall be the total compensation for the item and includes all overhead, profit and any other charges of the Contractor and/or subcontractor in connection therewith.

d. Adjustments will be computed on net variation of total quantities of like items.

e. The Owner reserves the right to accept or reject any or all of the unit prices listed below prior to the execution of the Contract.

12. SUBSTITUTIONS

a. Proposals shall conform to the requirements of the Bid Documents.

b. The Bidder may offer substitutions for any item of material or equipment, element of work, or method of construction set forth in the Bid Documents, with the exception of Form of Contract, General Conditions and General Requirements - Division 1, are to be entered into the eBuilder Bid Portal Response Form – Step 3 – Additional Required Information Custom Fields by listing each proposed substitution, together with the amount to be deducted from the Base Bid if the substitution is accepted on the form supplied with these instructions. However, the Bidder is cautioned to make his base proposal on the materials and items specified by name or other particular reference.

13. ALTERNATE PROPOSALS

a. Certain Alternate Proposals may be requested by the Owner and are included in the General Requirements. They will be listed in the Bid Scope Tab in the eBuilder Bid Portal. All Bidders are required to bid on all Alternates without exception.

b. Alternate Proposals shall include all overhead, profit and other expenses in connection therewith.

14. METHOD OF SUBMISSION

a. Base Bid shall be prepared and electronically submitted via the eBuilder Bid Portal. All required fields and attachments in the eBuilder Bid Portal must be completed.

b. Bid Proposal Certification Form shall be prepared electronically submitted as an attachment via the eBuilder Bid Portal Response Form – Step 3 – Additional Required Information Custom Fields.

c. Completed and responsive Bid Proposals shall be submitted through the eBuilder Bid Portal no later than 2:00PM on January 23, 2024.

d. Bid Proposals shall not contain any recapitulation of the work to be done. No oral, written, electronic or telephonic proposals, or modifications will be considered.

15. BID OPENING

a. Completed and responsive Bid Proposals will be opened electronically via eBuilder Bid Portal. Responsive Bid results will be posted to the Facilities Contracts website at: https://finance.fs.cornell.edu/contracts/pob/projects.cfm The Owner reserves the right to postpone the date and time of opening of proposals at any time prior to the date and time announced in this Instruction to Bidders or amendments thereto.

16. AWARD OF CONTRACT

a. It is the intent of the Owner to enter into a Contract with one General Contractor for the entire project. All labor and services and materials and supplies, etc. are to be provided in accordance with the Contract.

b. Award of the Contract shall be made to the bidder submitting the lowest responsive and responsible base bid who, in the opinion of the Owner, is qualified to perform the work. The competence and responsibility of the Bidders' proposed principal subcontractors will be considered in making the Award.

c. The Owner reserves the right to reject any or all Proposals, and to waive any informalities in Bidding. Contract award shall be subject to approval of Cornell University's Contractors Qualification Statement.

d. Bidder expressly warrants and commits that its Proposal shall remain unchanged and in full force and effect at the Owner's option for a period of not less than ninety (90) calendar days following the bid opening date.

e. Bidders may submit, recall, modify, resubmit or withdraw their Bids through the eBuilder Bid Portal up until the Bid Due Date and Time.

f. The Owner reserves the right to accept any of the Alternate Proposals listed within thirty (30) calendar days following the award of a construction contract or such other time as may be agreed to by the Owner and Contractor.

17. SCHEDULE OF VALUES

a. The successful Bidder shall submit a complete "Schedule of Values" showing the amounts allocated to the various trades, suppliers, subcontractors, installers and General Contractor's work, aggregating the total sum of the Contract. If requested by the Owner or Architect, the complete "Schedule of Values" shall be submitted prior to award of Contract.

18. PERFORMANCE AND LABOR AND MATERIALS PAYMENT BONDS

Prior to commencement of on-site construction activities, the successful Bidder shall furnish the Owner with "Performance" and “Labor and Material Payment Bonds", each in the amount of 100% of the Contract Price. Each of these Bonds are to be in a form with such sureties as the Owner may approve. The cost of such bonds shall be included in the Bidders Proposal.

19. START OF WORK

a. Work at the site shall be started within seven (7) calendar days from the date of issuance of written authorization to proceed and shall achieve substantial completion of the project no later than July 31, 2024.

1. NOTE: Prior to commencement of any on-site construction activities, the successful Bidder shall:
   i. Furnish the Owner with fully executed and satisfactory Payment and Performance bonds. No on-site construction activities may commence until executed and satisfactory bonds are in place for the subject project.
   ii. Furnish the Owner with safety plan related to COVID-19 pandemic.

b. The construction schedule and completion are critical. The Contractor shall provide adequate labor and equipment in the Bid to ensure that no slippage of the schedule will occur.

20. ADDENDA AND BULLETINS

a. Bidders must acknowledge in Step 3 of the Bid Response in the eBuilder Bid Portal each Addendum and/or Bulletin issued during the bidding period.

21. REQUIRED POST-AWARD SUBMISSIONS BY THE APPARENT LOW BIDDER

a. Within fourteen days after bid opening:

(1) Six-Month Workforce Projection

b. Upon Execution of Contract:

(1) Insurance Certificate
(2) Performance Bond
(3) Labor and Material Payment Bond
(4) Schedule of Work (bar chart)
(5) Federal Tax Identification Number

END OF SECTION

BEAMLINE ENABLING: PHASE 3

Cornell University, Ithaca, New York

BID PROPOSAL CERTIFICATION FORM

Vendor Name:	
Type of Firm, State of Incorporation if Applicable	
Street Address, City, State, Zip	

Having carefully examined the Instructions to Bidders, the "Conditions of the Contract" (General, Division 1 - "General Requirements"), Supplemental Conditions, the Drawings, Specifications and associated Bid Documents dated November 17, 2023 prepared by SWBR, 387 East Main Street Rochester, New York 14604, as well as the premises and conditions affecting the work, proposes to furnish all material, equipment, labor, plant, machinery, tools, supplies, services, applicable taxes and specified insurance necessary to perform the entire work, as set forth in, and in accordance with the said documents.

1. Receipt of the Addenda to the Terms and Conditions, Drawings or Specifications has been acknowledged in the eBuilder Bid Portal.

2. Minority and Women's Business Enterprises (M/WBEs)

   Facilities and Campus Services supports Cornell University's ongoing commitment to encourage business opportunities and diversity among its vendor community by promoting minority owned and controlled business' development as a shared responsibility. The University's intention is to create and expand opportunities for minority, women, veteran, LGBTQ, small and locally owned businesses through construction labor opportunities and the procurement of goods and services.

   Positive good faith efforts to advance the University's objectives shall be made by all Contractors, engaging, and maximizing these diverse enterprise goals, and to positively drive Cornell's economic impact.

   Cornell University Diversity Council Statement:
   "Cultivate partnerships with the widest spectrum of Off-Campus entities and include a fully diverse range of Off-Campus participants in Cornell's events, contracts, services, and initiatives."

3. Milestone Dates

   a. The undersigned agrees, if awarded the Contract, to commence work at the site within seven (7) calendar days after date of issuance of written notice to proceed and to achieve substantial completion of the project no later than July 31, 2024.

   b. The Contractor shall provide adequate labor and equipment in the Bid to ensure that no slippage of the schedule will occur. Contractor shall attach a Project Duration Schedule to this form that meets the duration established.

c. Following are additional Milestone Dates:

a. The undersigned agrees, if awarded the Contract, to furnish a "Construction Progress Schedule" consistent with the agreed upon Construction Duration showing the starting and completion dates for all principal trades and subdivisions of the Work, together with such additional information related thereto as may reasonably be required. Such a schedule shall be in conformance with General Requirements, Section 01 32 16, 1.3, A.

4. Proposed Principal Subcontractors

a. The undersigned agrees, if awarded the Contract, to employ subcontractors from the list submitted in the eBuilder Bid Portal Response Form – Step 3 – Additional Required Information Custom Fields subject to the following provisions:

i. The Owner and Architect reserve the right to review the list of "Proposed Principal Subcontractors" prior to the award of the Contract, and to delete from it the name or names of any to whom they may have a reasonable objection. The Contractor may make the final selection of principal subcontractors at his option from the resulting list after the award of the Contract.

5. Contractor Team:

a. The Owner reserves the right to reject the names of any Project Manager or Superintendent provided in the eBuilder Bid Portal submission to whom they have a reasonable objection.

6. Bonds

a. Bid Bond. A Bid Bond in the amount of a minimum of 10% of Bid Amount is attached to the eBuilder Bid Portal Response Form – Step 3 – Additional Required Information Custom Fields.

b. Performance and Payment Bonds. Prior to commencement of any on-site construction activities, the undersigned expressly agrees if awarded the Contract, to deliver to Owner executed "Performance" and "Labor and Material Payment Bonds" in such forms as are acceptable to the Owner and in an amount equal to 100% of the Contract Sum.

c. Such bonds will be furnished by the Surety entered into the eBuilder Bid Portal Response Form – Step 3 – Additional Required Information Custom Fields

d. Bonding Rate for Change Orders has been entered into the eBuilder Bid Portal Response Form – Step 3 – Additional Required Information Custom Fields

7. Bid Scope - Schedule of Values

    a. The undersigned agrees, prior to the award of a construction contract and upon the request of the Architect or Owner, to submit a complete, itemized and detailed "Schedule of Values" including Alternates elected, if any, showing the amount allocated to the various trades and subdivisions of the work, aggregating to the total Contract Sum submitted in the eBuilder Bid Portal.

8. Substitutions

    a. The Base Bid is predicated on compliance with the Drawings and Specifications without substitutions.

    b. The Bidder may offer substitutions for any item noted in the Specifications, with the exception of Form of Contract, General Conditions and General Requirements - Division 1.

    c. Any Substitutions are to be entered into the eBuilder Bid Portal Response Form – Step 3 – Additional Required Information Custom Fields by listing each proposed substitution, together with the amount to be deducted from the Base Bid if the substitution is accepted.

    d. The Owner reserves the right to accept or reject any proposed substitution.

    e. The sum stated includes any modifications of work or additional work that may be required by reason of acceptance of substitution. Substitute materials must be approved and accepted by the Owner in writing before same may be used in lieu of those named in the Specifications.

9. Unit Price Schedule

    a. The undersigned agrees, if awarded the Contract, to perform work "In addition to" or "deducted from" the scope of the Contract Documents as directed by the Owner and/or Architect, computed in accordance with the unit prices form uploaded in the eBuilder Bid Portal Response Form – Step 3 – Additional Required Information Custom Fields, which prices include all overhead, profit and other expense items in connection therewith, subject to the terms of the Contract Documents.

    b. All unit prices include the installation or omission, complete for each item, together with all work in connection therewith and shall include all shoring, bracing, dewatering and other incidental work.

    c. Adjustments will be computed on net variation of total quantities of like items.

    d. The Owner reserves the right to accept or reject any or all of the unit prices entered into the eBuilder Bid Portal Response Form – Step 3 – Additional Required Information Custom Fields prior to the execution of the Contract.

10. Acceptance

a. The undersigned agrees that the amount submitted for the Base Bid and any Alternates and Unit Pricing along with the required attachments in the Response Form – Step 3 – Additional Required Information Custom Fields submitted in the eBuilder Bid Portal have been reviewed and are accurate.

b. It is understood and agreed that the Owner expressly reserves the right to accept or reject any or all bids, and to waive irregularities or informalities in its sole and reasonable discretion.

c. Upon acceptance of Bidder's Proposal, Bidder expressly agrees and affirms to hold its unchanged Bid Proposal for ninety (90) calendar days. The undersigned will execute an Agreement between Contractor and Owner, amended and/or supplemented, if required, in accordance with the Proposal as accepted. Nothing contained herein shall preclude Bidder and Owner from mutually agreeing upon a Contract based upon the unchanged Bid Proposal if the time elapsed from Award is in excess of ninety (90) calendar days.

d. The undersigned acknowledges the following Addendum(s) (if applicable):

Addendum No. __ dated ____.

e. It is understood and agreed that award of the Contract shall be made to the bidder submitting the lowest responsive and responsible bid who, in the opinion of the Owner, is qualified to perform the work.

f. The undersigned agrees to furnish Owner satisfactory and executed Performance and Payment Bonds prior to the commencement of any Work on-site.

g. The undersigned acknowledges as Contractor to be and remain exclusively in control of the Project site and Work, as well as the Project's Health & Safety Plan, measures, and/or protocols, for the duration of construction activities.

   i. The undersigned acknowledges receipt of **Supplemental Conditions** to the Contract surrounding Contractor Response and Health & Safety Protocols for COVID-19, or other viral, bacterial, or microbial presence (as applicable).

   ii. The undersigned acknowledges that no one will be permitted on the job site until the Health & Safety Plan has been submitted.

h. Alternates:

   1. The undersigned, if awarded the Contract, proposes to perform work in addition to or in place of the scope of the work shown and specified herein associated with the Base Bid in accordance with the Alternate Proposals, which amounts are to be added or deducted to the amount of the Base Bid as indicated for the Alternates specified in Division 1 of the Specifications.

2. It is understood that the Owner reserves the right to accept or reject any of the Alternate Proposals provided in the eBuilder Bid Portal within thirty (30) calendar days following the award of a construction contract or such other time as may be agreed to by the Owner and Contractor.

The following documentation is required to be submitted electronically in the eBuilder Bidding Portal Response Form – Step 3 – Additional Required Information Custom Fields

- ☐ This Form with Proposed Milestone Schedule – signed and executed
- ☐ Bid Bond
- ☐ Proposed Project Team Resumes
- ☐ Bidder Project Qualifications

_____
(Bidder)

By: _____

Title: _____

Business Address: _____

Dated: _____

CERTIFICATE OF NON-COLLUSION

By submission of this bid, each bidder and each person signing on behalf of any bidder certifies, and in the case of a joint bid each party thereto certifies as to its own organization, under penalty of perjury, that to the best of its knowledge and belief:

a. The prices in this bid have been arrived at independently without collusion, consultation, communication, or agreement, for the purpose of restricting competition, as to any matter relating to such prices with any other bidder or with any competitor.

b. Unless required by law, the prices that have been quoted in this bid have not been knowingly disclosed, directly or indirectly, by the bidder and will not knowingly be disclosed by the bidder to any other bidder or any competitor prior to opening.

c. No attempt has been made or will be made by the bidder to induce any other persons, partnership, or corporation to submit or not submit a bid for the purpose of restricting competition.

_____
(Bidder)

By: _____

Title: _____

Dated: _____

CERTIFICATE AS TO CORPORATE BIDDER

I, _____, certify that I am the _____ of the Corporation named as Bidder within this Bid Form for General Contractors; that _____, who signed said Bid Form on behalf of the bidder was then _____ of said Corporation; that I know his signature; that his signature thereto is genuine and that said Bid Form and attachments thereto were duly signed and executed for and on behalf of said Corporation by authority of its governing body.

_____
(Secretary-Clerk)

Dated: _____

G E N E R A L C O N D I T I O N S

FOR

BEAMLINE ENABLING: PHASE 3

CORNELL UNIVERSITY
ITHACA, NEW YORK

GENERAL CONDITIONS

Table of Contents **Page**

EXHIBITS

ARTICLE 1 -- INTERPRETATION OF CONTRACT DOCUMENTS

Section 1.01 - Owner

A. The Owner is Cornell University as identified in the Agreement and referred to throughout the Contract Documents as the "Owner" or "Cornell University".

B. Ownership of Documents: All drawings, specifications, computations, sketches, test data, survey results, photographs, renderings and other material relating to the Work, whether furnished to or prepared by the Contractor, are the property of Cornell University. The Contractor shall use such materials or information therefrom only in connection with the Work of this Contract. When requested, the Contractor shall deliver such materials to Cornell University.

C. The Owner shall give all orders and directions contemplated under the Contract relative to the execution of the Work. The Owner shall determine the amount, quality, acceptability, and fitness of the Work and shall decide all questions which may arise in relation to said Work. The Owner's estimates and decisions shall be final except as otherwise expressly provided.

D. Any differences or conflicts concerning performance which may arise between the Contractor and other Contractors performing Work for the Owner shall be adjusted and determined by the Owner.

E. The table of contents, titles, captions, headings, running headlines, and marginal notes contained herein and in said documents is intended to facilitate reference to various provisions of the Contract Documents and in no way affect the interpretation of the provisions to which they refer.

Section 1.02 - Meaning and Intent of Specifications, Plans and Drawings

The meaning and intent of all specifications, plans and drawings shall be determined in a manner approved by the Owner.

Section 1.03 - Order of Precedence

A. Should a conflict occur in or between or among any parts of the Contract Documents that are entitled to equal preference, the more expensive way of doing the Work, the sounder technique or workmanship, or better quality or greater quantity of material shall govern, unless the Owner directs otherwise so directs in writing.

B. Drawings and specifications are reciprocal. Anything shown on the plans and not mentioned in the specifications, or mentioned in the specifications and not shown on the plans, shall have the same effect as if shown or mentioned in both.

C. Requirements of reference standards form a part of these specifications to the extent indicated by the reference thereto. When provisions of reference standards conflict with provisions in these specifications, the specifications shall govern.

ARTICLE 2 -- CONTRACTOR

Section 2.01 - Contractor's Obligations

A. The Contractor shall, in good workmanlike manner, perform all the Work required by the Contract within the time specified in the Contract. The Contractor shall comply with all terms of the Contract, and shall do, carry on, and complete the entire Work to the satisfaction of the Owner.

1. All labor for this project which is normally under the jurisdiction of one of the local unions as covered in the contract between the Tompkins-Cortland Building Trades Council, Maintenance Division and Cornell University shall be performed by Union labor.

B. The Contractor shall furnish, erect, maintain, and remove such construction plant and such temporary Work as may be required.

C. The Contractor shall provide and pay for all labor, material, tools, equipment, machinery, as well as utility connections, transportation, and all other facilities and services necessary for the proper execution and completion of the Work, except as otherwise specified elsewhere in the Contract Documents.

D. Whenever a provision of the Specifications conflicts with agreements or regulations in force among members of trade associations, unions, or councils which regulate or distinguish what work shall or shall not be included in the work of a particular trade, the Contractor shall make all necessary arrangements to reconcile such conflict without delay, damage, or cost to the Owner and without recourse to the Architect or the Owner. In case progress of the Work is affected by undue delay in furnishing or installing items of material or equipment required under the Contract because of a conflict involving such agreement or regulations, the Owner or the Architect may require that other material or equipment of equal kind and quality be provided at no additional cost to the Owner.

Section 2.02 - Contractor's Title to Materials

A. The Contractor warrants that the Contractor has full, good and clear title to all materials and supplies used by the Contractor in the Work, free from all liens, claims or encumbrances.

B. All materials, equipment and articles which become the property of the Owner shall be new unless specifically stated otherwise.

Section 2.03 - "Or Equal" Clause

A. Whenever a material, article or piece of equipment or method is identified on the plans or in the specifications by reference to manufacturers' or vendors' names, trade name, catalogue number, or make, no others or alternatives may be substituted. Any and all other "Or Equal" considerations will be handled under this Section in accordance with General Requirements, Section 01 25 00.

B. Where the Architect approves a product proposed by the Contractor and said proposed product requires a revision or redesign of any part of the Work covered by this Contract, or the Work covered by other contracts, all said revision(s) or redesign(s), and all new drawings and details required thereto shall be provided by the Contractor and shall be approved by the Architect. All time spent by the Architect or its agents to evaluate the proposed substitution and or necessary engineering cost to accommodate the requested change shall be reimbursed to the Owner by the Contractor via the Change Order procedure.

Section 2.04 - Quality, Quantity and Labeling

A. The Contractor shall furnish materials and equipment of the quality and quantity specified in the Contract. Unless otherwise provided, all materials and articles incorporated into the Work shall be new and of the most suitable grade of their respective kinds for the purpose. When required by the Contract Documents or when directed by the Owner, the Contractor shall supply the Owner's Representative, for their acceptance, full information concerning any material which the Contractor contemplates incorporating into the Work. Materials and articles installed or used without such acceptance shall be at the risk of subsequent rejection.

B. When materials are specified to conform to any standard, the Owner may require that the materials delivered to the Site shall bear manufacturer's labels stating that the materials meet said standards.

C. The above requirements shall not restrict or affect the Owner's right to test materials as provided in the Contract.

D. Whenever several alternative materials or items are specified by name or other particular reference for one use, the Owner's Representative may require the Contractor to submit in writing a list of the particular materials or items the Contractor intends to use before the Contract is executed.

Section 2.05 - Superintendence by Contractor

A. The Contractor shall employ a full-time effective, responsive and competent construction superintendent and necessary staff; the construction superintendent shall devote full time to the Work and shall have full authority to act for the Contractor at all times. The Contractor shall provide the Owner with the names and authority of such personnel in writing.

B. If at any time the superintendent is not satisfactory to the Owner, the Contractor shall, if requested by the Owner, replace said superintendent with another superintendent satisfactory to the Owner. There shall be no change in superintendent without the Owner's approval.

C. The Contractor shall remove from the Work any employee of the Contractor or of any Subcontractor when so directed by the Owner.

Section 2.06 - Subsurface or Site Conditions

A. The Contractor acknowledges that it has assumed the risk and that the Contract consideration includes such provision as the Contractor deems appropriate and adequate to account for all subsurface conditions as the Contractor could reasonably anticipate encountering from the provisions of the Contract Documents, borings, rock cores, topographical maps and such other information as the Owner made available to the Contractor or from their own inspection and examination of the site prior to the Owner's receipt of Contractor bids.

B. In the event that the Contractor encounters subsurface physical conditions at the site differing substantially from those shown on or described or indicated in the Contract Documents and which could not have been reasonably anticipated from the aforesaid information made available by the Owner or from the Contractor's inspection and examination of the site, the Contractor shall give immediate notice to the Owner of such conditions before they are disturbed. Such notice shall include probable cost and/or any impact to the Project Schedule. The Owner will thereupon promptly investigate the conditions and if Owner finds that they do substantially differ from that which should have been reasonably anticipated by the Contractor, the Owner shall make such changes in the drawings and specifications as may be necessary and a change order shall be issued.

Section 2.07 - Representations of Contractor

The Contractor represents and warrants:

A. That the Contractor is financially solvent, sufficiently stable to secure the required payment and performance bonds, and is sufficiently experienced in and competent to perform the subject Work or retain qualified subcontractors to perform elements of the Work pursuant to the Project’s plans and specifications;

B. That the Contractor is familiar with all Federal, State, or other laws, ordinances, orders, building codes, rules and regulations, which may in any way affect the Work;

C. That any temporary and permanent Work required by the Contract can be safely and satisfactorily constructed.

D. That the Contractor has carefully examined the Contract and the Site of the Work and that, from the Contractor's own investigations is satisfied as to the nature and location of the Work, the character, quality and quantity of surface and subsurface materials likely to be encountered, the character of equipment and other facilities needed for the performance of the Work, accounted for weather days, the general and local conditions, and all other materials or items which may affect the Work. The Contractor has correlated those observations with the requirements of the Contract Documents and has made all other investigations essential to a full understanding of the Work and the difficulties which may be encountered in performing the Work.

Section 2.08 - Verifying Dimensions and Site Conditions

A. The Contractor shall take all measurements at the Site and shall verify all dimensions and site conditions at the Site before proceeding with the Work. If said dimensions or conditions are found to be in conflict with the Contract, the Contractor immediately shall refer said conflict to the Owner.

B. During the progress of Work, the Contractor shall verify all field measurements prior to fabrication of building components and equipment, and proceed with the fabrication to meet field conditions.

C. The Contractor shall consult all Contract Documents to determine exact location of all Work and verify spatial relationships of all Work. Any question concerning said location or spatial relationships shall be submitted in a manner approved by the Owner.

D. Specific locations for equipment, pipelines, ductwork and other such items of Work, where not dimensioned on plans, shall be determined in consultation with the Owner and other affected Contractors and Subcontractors.

E. The Contractor shall be responsible for the proper fitting of the Work in place.

F. Should Contractor's failure to perform services under this section result in additional costs to the Owner, the Contractor shall be responsible for such additional costs.

Section 2.09 - Copies of Contract Documents for Contractors

A. The Contractor will have access to view and download the Bid Documents in eBuilder.

B. All drawings, specifications, and copies thereof furnished by the Owner are the property of the Owner. They are not to be used on other work with the exception of the signed Contract Set, are to be returned to the Owner along with the As-Builts at the completion of the Work.

Section 2.10 - Meetings

The Contractor and all subcontractors as requested shall attend all meetings as directed by the Owner or the Owner's Representative.

Section 2.11 - Related Work

The Contractor shall examine the Contract for related work to ascertain the relationship of said work to the Work under the Contract.

Section 2.12 - Surveys and Layout

Unless otherwise expressly provided in the Contract, the Owner shall furnish the Contractor all surveys of the property necessary for the Work, but the Contractor shall lay out the Work.

Section 2.13 - Errors, Omissions or Discrepancies

The Contractor shall examine the Contract thoroughly before commencing the Work and report in writing any errors or discrepancies to the Owner or the Owner's Representative.

Section 2.14 - Project Labor Rates

The Contractor shall submit to the Owner, for review and approval, within thirty (30) days after Contract is awarded all trade labor rates inclusive of fringe benefits, taxes, insurance for the duration of the individual craft agreement in accordance with Exhibit. Revised rates shall be provided within thirty (30) days of signing any new agreements with the individual crafts during this project.

Section 2.15 – Daily Reports

The Contractor's Construction Superintendent shall submit a Daily Report to the Cornell University Project Manager or the Resident Field Engineer at the job site. Such reports shall, at a minimum, contain the following information:

Name of Project
Project Number
Date of Report
Weather Conditions
Equipment on the site
Contractors on site including name and number of employees on site for each contractor
Work/area and activity for each contractor
Overtime worked and planned work progress
Environmental problems and corrections
Other information, such as special events, occurrences, materials delivered, accidents or injuries, recommendations, suggestions, visitors, inspections, equipment start-up and check out, occupancy, etc.

ARTICLE 3 -- INSPECTION AND ACCEPTANCE

Section 3.01 - Access to the Work

The Owner and Architect, or their duly authorized representatives, assistants, or inspectors shall at all times and for any purpose have access to the Work and the premises used by the Contractor, and the Contractor shall provide safe and proper facilities therefor. In addition, the Contractor shall, whenever so requested, give the Owner and Architect or their duly authorized representatives access to the proper invoices, bills of lading, specifications, etc., which may be required in determining the adequacy and/or quantity of materials used in completion of the Work.

Section 3.02 - Notice for Testing

If the Contract Documents, laws, ordinances, rules, regulations, or orders of any public authority having jurisdiction require any Work to be inspected, tested, accepted, or approved, the Contractor shall give the Owner timely notice of its readiness and of the date arranged so the

Owner may observe such inspection, testing, or approval. The Contractor shall bear all costs of such inspection, tests, and approvals unless otherwise provided.

Section 3.03 - Inspection of Work

A. The Contractor will cooperate in all ways to facilitate the inspection and examination of the Work. The inspections and examinations will be carried out in such a manner that the Work will not be delayed.

B. All Work, all materials whether or not incorporated in the Work, all processes of manufacturer, and all methods of construction shall be, at all times and places, subject to the inspection of the Owner and the Owner shall be the final judge of the quality and suitability of the Work. Any Work not approved by the Owner shall immediately be reconstructed, made good, replaced or corrected by the Contractor including all Work of other Contractors destroyed or damaged by said removal or replacement.

C. Required certificates of inspection, testing, acceptance, or approval shall be secured by the Contractor and promptly delivered to the Owner.

Section 3.04 - Inspection and Testing

All materials and equipment used in the Work shall be subject to inspection and testing in accordance with accepted standards to establish conformance with specifications and suitability for uses intended, unless otherwise specified in the Contract. If any Work shall be covered or concealed without the approval or consent of the Owner, said Work shall, if required by the Owner, be uncovered for examination. If any test results are below specified minimums, the Owner may order additional testing. The cost of said additional testing, any additional professional services required, and any other expenses incurred by the Owner as a result of said additional testing shall be paid by the Contractor. Reexamination of any part of the Work may be ordered by the Owner, and if so ordered the Work must be uncovered by the Contractor. If said Work is found to be in accordance with the Contract, the Owner shall pay the cost of reexamination and replacement. If said Work is found not to be in accordance with the Contract, the Contractor shall pay the cost of reexamination and replacement.

Section 3.05 - Defective or Damaged Work

If, in the opinion of the Owner, it is undesirable to replace any defective or damaged materials or to reconstruct or correct any portion of the Work injured or not performed in accordance with the Contract Documents, the compensation to be paid to the Contractor shall be reduced by an amount which, in the judgment of the Owner, shall be deemed to be equitable.

Section 3.06 - Acceptance

No previous inspection shall relieve the Contractor of the obligation to perform the Work in accordance with the Contract Documents. No payment, either partial or full, by the Owner to the Contractor shall excuse any failure by the Contractor to comply fully with the Contract Documents. The Contractor shall remedy all defects, paying the cost of any damage to other Work resulting therefrom.

ARTICLE 4 -- CHANGES IN WORK

Section 4.01 - Changes

A. The Owner, without invalidating the Contract, may order and approve changes within the general scope of the Contract and the Contractor shall promptly comply with such change orders.

B. A change order is a written direction to the Contractor signed by the Owner, issued after execution of the Contract, authorizing a change in the Work, extra work, or an adjustment in the Contract price or time of performance.

C. No claims for changes, extra work or additional time to complete the Contract or an adjustment in the Contract price shall be allowed unless such change is ordered in writing by the Owner.

D. The Owner shall determine the amount by which the Contract consideration is to be increased or decreased by a change order by one (1) or more of the following methods:

1. By agreement with the Contractor.

2. By applying the applicable price or prices previously bid and approved.

   (i) To the extent that Unit Prices are applicable, as determined by the Owner, work shall be priced and paid for or credited in accordance with such Unit Prices; except that a Unit Price shall not apply to any portion of work which is either reduced or increased by more than 25%. Said Unit Prices shall be valid for the duration of the project as applicable, unless stipulated elsewhere in the Contract Documents.

   (ii) For Unit Price items, additions and deletion of like items shall be algebraically summed and then multiplied by the applicable Unit Prices. For Direct Labor and Material items, all additions and deletions shall be algebraically summed for each subcontractor and then multiplied by the applicable markup.

   (iii) Unit Prices are for work complete, measured in place and cover profit and all other costs and expenses. Unit Prices include, without limit, all conditions of the contract and all general requirements such as layout, reproduction of Drawings and Specifications, testing and inspection, shop drawing and sample coordination, supervision (field and home office), small tools and expendable items, insurance, taxes, temporary facilities and services, including access and safety, "as-built" drawings, and general and administrative overhead and profit.

3. By estimating the fair and reasonable cost of:

   (i) Labor, including all wages, required wage supplements and insurance required by law paid to employees below the rank of superintendent directly employed at the Site.

   (ii) Materials

   (iii) Equipment, excluding hand tools, which in the judgment of the Owner, would have been or will be employed exclusively and directly on the Work. When submitting change orders, equipment which is common to the project scope at hand is expected to be previously paid for as overhead / general conditions to the project. Special rental equipment or tools not common to the project that are required to perform the change order will be accepted as additional costs.

4. By determining the actual cost of the extra work in the same manner as in Subsection 3 except the actual costs of the Contractor shall be used in lieu of estimated costs.

E. Mark-up Percentages

1. Work performed by the Contractor: Where the Work is performed directly by the Contractor by adding to the total of such estimated costs a sum equal to fifteen percent (15%) thereof.

2. Work performed by a Subcontractor: Where the change order work is performed by a Subcontractor under contract with the Contractor, by adding a sum equal to fifteen (15%) of said costs for the benefit of said Subcontractor, and by adding for the benefit of the Contractor an additional sum equal to ten percent (10%) of said costs.

3. Work performed by a Sub-Subcontractor: Where work is performed by a Sub-Subcontractor, by adding the sum equal to fifteen percent (15%) of said costs for the benefit of said Sub-Subcontractor, by adding for the benefit of the Subcontractor an additional sum equal to five percent (5%) of said cost and by adding for the benefit of the Contractor an additional sum equal to five percent (5%) of said cost. The maximum aggregate of all mark-up percentages may not exceed twenty five percent (25%).

4. No Markup on Bonds and Insurance Costs: Change Order cost adjustments due to increases or decreases in bond or insurance costs (if applicable) shall not be subject to any Markup Percentage.

5. Overtime Pay: No mark-up shall be paid on the premium portion of overtime pay.

6. Direct and Indirect Costs Covered by Markup Percentages: As a further clarification, the agreed upon Markup Percentage is intended to cover the Contractor's profit and all indirect costs and expenses associated with the change order work. Items intended to be covered by the Markup Percentage include, without limit: home office expenses, branch office and field office overhead expense of any kind; project management; superintendents, general foremen; estimating, engineering; coordinating; expediting; purchasing; detailing; legal, accounting, data processing or other administrative expenses; reproduction of drawings and specifications; shop drawings and sample coordination; "as-built" drawings; permits; auto insurance and umbrella insurance; pick-up truck costs; parking permits; cellular phones; testing and inspection; temporary facilities; access and safety provisions; and warranty expense costs. The cost for the use of small tools and/or tools already in use on site are also to be considered covered by the Markup Percentage. Small tools shall be defined as tools and equipment (power or non-power) with an individual purchase cost of less than $750

7. Deduct Change Orders and Net Deduct Changes: The application of the markup percentage will apply to both additive and deductive change orders. In the case of a deductive change order, the credit will be computed by applying the percentage so that a deductive change order would be computed in the same manner as an additive change order. In those instances where a change involves both additive and deductive work, the additions and deductions will be netted and the markup percentage adjustments will be applied to the net amount

F. Regardless of the method used by the Owner in determining the value of a change order, the Contractor, within thirty (30) calendar days after a request for the estimate of value shall submit to the Owner a detailed breakdown of the Contractor's estimate, including all subcontractors details, of the value of the Change Order Work, in the format detailed in Exhibit A. Each submission shall include an electronic .pdf format of all documentation.

G. Unless otherwise specifically provided for in a change order, the compensation specified therein includes and shall constitute a full payment for both the Work covered or arising from the order and for any damage or expense incurred by the Contractor by any delays, including any and all impacts, known or unknown, or delays to other Work to be done under the Contract resulting from said change order. The Contractor expressly waives all rights to any other compensation for said damage or expense.

H. The Contractor shall furnish satisfactory bills, payrolls and vouchers covering all items of cost and when requested by the Owner shall give the Owner access to accounts and records relating thereto.

Section 4.02 – Claims for Extra Work

If the Contractor claims (i) that any work it has been ordered to do is extra work or (ii) that it has performed or is going to perform extra work or (iii) that any action or omission of the Owner or the Architect is contrary to the terms and provisions of the Contract, the Contractor shall:

A. Promptly comply with such order;

B. Notwithstanding the provisions of this Agreement, Article 4 of these General Condition and any other provisions of the Contract documents to the contrary, file with the Owner, within fourteen (14) calendar days after being ordered to perform the work claimed by it to be extra work or within fourteen (14) calendar days after commencing performance of the extra work, whichever date shall be the earlier, or within fourteen (14) calendar days after the said action or omission on the part of the Owner or the Architect occurred, a written notice of the basis of its claim and request a determination thereof;

C. Notwithstanding the provisions of this Agreement and any other provisions of the Contract documents to the contrary, file with the Owner, within thirty (30) calendar days after said alleged extra work was required to be performed or said alleged extra work was commenced, whichever date shall be the earlier, or said alleged action or omission by the Owner or the Architect occurred, a verified detailed statement, with documentary evidence, of the items and basis of its claim;

D. Produce for the Owner's examination, upon notice from the Owner, all its books of account, bills, invoices, payrolls, subcontracts, time books, progress records, daily reports, bank deposit books, bank statements, checkbooks and cancelled checks, showing all of its actions and transactions in connection with or relating to or arising by reason of its claim, and submit persons in its employment and in its subcontractors' employment for examination under oath by any person designated by the Owner to investigate any claims made against the Owner under the Contract, such examination to be made at the offices of the Contractor; and

E. Proceed diligently, pending and subsequent to the determination of the Owner with respect to any such disputed matter, with the performance of the Contract and in accordance with all instructions of the Owner and the Architect.

F. The Contractor's failure to comply with any or all parts of Section 4.02 shall be deemed to be: (i) a conclusive and binding determination on its part that said order, work, action or omission does not involve extra work and is not contrary to the terms and provisions of the Contract; and (ii) a waiver by the Contractor of all claims for additional compensation or damages as a result of said order, work, action or omission. The provisions of Section 4.02 is to promptly afford the Owner opportunity to cancel or revise any order, change its plans, mitigate or remedy the effects or circumstances giving rise to a claim or take such other action as may seem desirable and to verify any claimed expenses or circumstances as they occur. Compliance with such provisions is essential whether or not the Owner is aware of the circumstances of any order or other circumstances which might constitute a basis for a claim and whether or not the Owner has indicated it will consider a claim in connection therewith.

G. No person has power to waive or modify any of the foregoing provisions and, in any action against the Owner to recover any sum in excess of the sum certified by the Owner to

be due under or by reason of the Contract, the Contractor must allege in its complaint and prove compliance with the provisions of this Section.

Section 4.03 - Form of Change Orders

All change orders shall be processed, executed and approved via the Owner's E-Builder Change Order Process. No payment for change order Work shall be due the Contractor unless a change order has been issued and approved as noted above and processed via E-Builder.

ARTICLE 5 -- TIME OF COMPLETION

Section 5.01 - Time of Completion

A. The Work shall be commenced at the time stated in the written order of the Owner and shall be completed no later than the dates of completion specified in the Contract. All required overtime to maintain progress schedule is included in the Base Bid.

B. The date of beginning and the times for completion of the Work, as specified in the Contract, are essential conditions of the Contract.

C. The Work shall be prosecuted diligently at such rate of progress as shall insure substantial and full completion within the time specified. It is expressly understood and agreed, that the times for the completion of the Work described herein is a reasonable time, taking into consideration the average climatic range and usual business and labor conditions prevailing in the locality of the Site.

D. Time is of the essence on each and every portion of the Work. In any instance in which additional time is allowed for the completion of any Work, the new time of completion established by said extension shall be of the essence. If in the Architect's or Owner's judgment, it becomes necessary at any time during construction to accelerate and/or complete certain areas of the project, the Contractor shall concentrate efforts and manpower on designated areas.

E. Where Work occurs within occupied areas, perform same only on the approved schedule, so as not to interfere with normal operation of occupied areas.

F. The Contractor shall not be charged with damages or any excess cost if the Owner determines that the Contractor is without fault and the Contractor's reasons for the time extension are acceptable to the Owner. The Contractor shall not be charged with damages or any excess cost for delay in completion of the work if the Owner determines that the delay is due to:

1. any preference, priority or allocation order duly issued by the Government of the United States or the State of New York;

2. unforeseeable cause beyond the control and without the fault or negligence of the Contractor, and approved by the Owner, including, but not limited to, acts of God or of public enemy, acts of the Owner, fires, epidemics, quarantine, restrictions, strikes, freight embargoes and unusually severe weather.

G. The time for completion can only be extended by change order and may be extended for:

1. all of the Work, or

2. only that portion of the Work altered by the change order.

H. Any claim for extension of time shall be made in writing to the Owner not more than ten (10) days after the commencement of the delay; otherwise it shall be waived.

ARTICLE 6 -- TERMINATION

Section 6.01 - Termination for Cause

In the event that any provision of this Contract is violated by the Contractor or by any Subcontractor of the Contractor, the Owner may serve written notice upon the Contractor, and upon the Contractor's surety, if any, of the Owner's intention to terminate the Contract. The notice shall briefly state the reasons for the termination and shall specify a termination date. If arrangements satisfactory to the Owner are not made to remove and remedy the violation, the Contract shall terminate upon the date specified by the Owner in the notice. In the event of termination, the Owner may take over and complete the Work at the expense of the Contractor. The Contractor and Contractor's surety shall be liable to the Owner for all costs thereby incurred by the Owner. In the event of such termination the Owner may take possession of and may utilize such materials, appliances, and plant as may be located on the Site and which may be necessary or useful in completing the Work.

Section 6.02 - Termination for Convenience of Owner

The Owner, at any time, may terminate the Contract in whole or in part. Any said termination shall be effected by delivering to the Contractor a notice of termination specifying the extent to which performance of Work under the Contract is terminated and the date upon which said termination becomes effective. Upon receipt of the notice of termination, the Contractor shall act promptly to minimize the expenses resulting from said termination. The Owner shall pay the Contractor for costs actually incurred by the Contractor up to the effective date of said termination, but in no event shall the Contractor be entitled to compensation in excess of the total consideration of the Contract. In the event of said termination the Owner may take over the Work and prosecute same to completion.

Section 6.03 - Owner's Right to do Work

The Owner may, after notice to the Contractor, without terminating the Contract and without prejudice to any other right or remedy the Owner may have, perform or have performed by others all of the Work or any part thereof and may deduct the cost thereof from any monies due or to become due the Contractor.

ARTICLE 7 -- DISPUTES

Section 7.01 - Disputes Procedure

A. If the Contractor claims that any Work which the Contractor has been ordered to perform will be Work which should have been authorized or directed by change order, or that any action or omission of the Owner is contrary to the terms of the Contract, the Contractor shall:

1. File a notice with the Owner which sets forth the basis of the Contractor's claim and requests a resolution of the dispute. Such notice shall be filed within fifteen (15) working days after being ordered to perform the disputed work or within fifteen (15) working days after commencing performance of the disputed work, whichever is earlier, or within fifteen (15) working days after the act or omission of the Owner which the Contractor claims is contrary to the terms of the Contract.

2. Proceed diligently with the performance of the work in accordance with the instructions of the Owner pending the resolution of the dispute by the Owner.

3. Promptly comply with the order of the Owner regarding the disputed matter.

4. Any such decision, or any other decision of the Owner in respect to a dispute, shall be final unless the Contractor, within ten (10) working days after such decision, shall deliver to the Owner a verified written statement which sets forth the Contractor's contention that the decision is contrary to a provision of the contract. Pending the decision of the Owner, the Contractor shall proceed in accordance with the original decision. The Owner shall determine the validity of the Contractor's claim and such determination shall be final. The Contractor may file a notice with the Owner reserving its rights in connection with the dispute but shall comply with the Owner's decision and complete the work as directed.

B. No claim for additional costs regarding changed or extra work shall be allowed unless the work was done pursuant to a written order of the Owner.

C. The value of claims for extra work, if allowed, shall be determined by the methods described in the Contract. Refer to Article 4 of these General Conditions.

D. The Contractor's failure to comply with any or all parts of Article 7 shall be deemed to be:

1. a conclusive and binding determination on the part of the Contractor that the order, work, action or omission is not contrary to the terms and provisions of the Contract;

2. a waiver by the Contractor of all claims for additional compensation, known or unknown, including time extensions, or damages as a result of said order, work, action, or omission.

ARTICLE 8 -- SUBCONTRACTS

Section 8.01 - Subcontracting

A. The Contractor may utilize the services of Subcontractors.

B. The Contractor shall submit to the Owner, in writing, the name of each proposed Subcontractor and Sub-Subcontractor, as required by the Contract. The Contractor shall not award any Work to any Subcontractor or Sub-Subcontractor without the prior written approval of the Owner.

C. The Contractor shall be fully responsible for the Work, acts and omissions of Subcontractors, and of persons either directly or indirectly employed by Subcontractors.

D. The Contractor shall cause appropriate provisions to be inserted in all subcontracts relative to the Work to bind Subcontractors to the Contractor by the terms of the Contract insofar as applicable to the Work of Subcontractors, indemnification and to give the Contractor the same power to terminate any subcontract that the Owner may exercise over the Contractor.

E. The Contractor's use of Subcontractors shall not diminish the Contractor's obligation to complete the Work in accordance with the Contract. The Contractor shall control and coordinate the Work of Subcontractors.

F. Nothing contained in the Contract shall create any contractual relationship between Subcontractors and the Owner.

ARTICLE 9 -- COORDINATION AND COOPERATION

Section 9.01 - Cooperation with Other Contractors

A. Normally, the Work will be performed by a single Contractor. However, the Owner reserves the right to perform work related to the Work with its own forces or award separate contracts. In that event, the Contractor shall coordinate its operations with the Owner's forces or separate Contractors.

B. The Owner cannot guarantee the responsibility, efficiency, unimpeded operations or performance of any contractor. The Contractor acknowledges these conditions and shall bear the risk of all delays including, but not limited to, delays caused by the presence or operations of other contractors.

C. The Contractor shall keep informed of the progress and workmanship of other contractors and shall notify the Owner immediately of lack of progress or defective workmanship on the part of other contractors where said delay or defective workmanship may interfere with the Contractor's operations.

D. Failure of a Contractor to keep so informed and failure to give notice of lack of progress or defective workmanship by others shall be construed as acceptance by the Contractor of said progress and workmanship as being satisfactory for proper coordination with the Work.

E. If the Contractor notifies the Owner, in writing, that another contractor on the Site is failing to coordinate the work of said contractor with the Work, the Owner shall investigate the charge. If the Owner finds it to be true, the Owner shall promptly issue such directions to the other contractor with respect thereto as the situation may require. The Owner shall not be liable for any damages suffered by the Contractor by reason of the other contractor's failure to promptly comply with the directions so issued by the Owner, or by reason of another contractor's default in performance.

F. If the Owner shall determine that the Contractor is failing to coordinate the Work with the work of other contractors as the Owner has directed:

1. the Owner shall have the right to withhold any payments due under the Contract until the Owner's directions are complied with by the Contractor; and

2. the Contractor shall indemnify and hold the Owner harmless from any and all claims or judgments for damages and from any costs or damages to which the Owner may be subjected or which the Owner may suffer or incur by reason of the Contractor's failure promptly to comply with the Owner's directions.

G. Should the Contractor sustain any damage through any act or omission of any other contractor having a contract with the Owner or through any act or omission of any Subcontractor of said other contractor, the Contractor shall have no claim against the Owner for said damage.

H. Should any other contractor having a Contract with the Owner sustain damage through any act or omission of the Contractor or its Subcontractor, the Contractor shall reimburse said other contractor for all said damages and shall indemnify and hold the Owner harmless from all said claims.

ARTICLE 10 -- PROTECTION OF RIGHTS, PERSONS AND PROPERTY

Section 10.01 - Accidents and Accident Prevention

A. The Contractor shall at all times take reasonable precautions for the safety of persons engaged in the performance of the Work. The Contractor shall comply fully with all applicable provisions of federal, state, and local law. The Contractor alone shall be responsible for the safety, efficiency and adequacy of the Contractor's Work, plant, appliances and methods, and for any damage which may result from the failure or the improper construction, maintenance, or operation of said Work, plant, appliances and methods.

B. The Contractor shall maintain an accurate record of all cases of death, occupational disease, public health statistics or information, and injury requiring medical attention, pursuant to government authority, or causing loss of time from work, arising out of or in the course of employment on Work under the Contract, and shall immediately notify the Owner in writing of any injury which results in hospitalization or death, or significant near miss incidents that had the potential to result in serious injury or death. The Contractor shall upload all

completed Contractor and Subcontractor incident investigation forms and reports within five (5) working days of the incident. The report shall include the extent of damage or injury, the persons involved and their employers, the number of days persons are hospitalized, and any other pertinent information required by Cornell University. Such reporting shall be submitted on the e-Builder Accident Form.

C. The Contractor shall provide to the Project Manager, Material Safety Data Sheets (OSHA Form 20 or the equivalent) for all chemicals to be used on site. All chemicals requiring any precautionary measures (e.g., special storage or disposal requirements, personal protective equipment, or additional ventilation), shall be brought to the attention of Cornell University for review and approval, prior to their use on site.

1. All chemicals brought on site by the Contractor shall be clearly labeled. The label shall state the identity of the chemical, any associated hazards, and the Contractor's name.

2. All Contractor employees who are using chemicals shall be made aware of the hazards associated with their use. Safe chemical handling procedures in accordance with OSHA or other governmental agencies, and manufacturer's recommendations shall be used at all times.

3. The Contractor shall dispose of all chemicals in accordance with EPA and Cornell University requirements, regardless of the size of the container or the quantity of waste, and must receive prior approval of Cornell University.

4. A Contractor's Waste Material Disposal Plan form is required (with or without waste) to be submitted with submission of the first payment. The form can be found at:
   https://ehs.cornell.edu/sites/default/files/FRM-CWMDP-Contractor-Waste-Material-Disposal-Plan-IPDF.pdf

D. The Contractor shall be responsible for the initiation, maintenance and supervision of safety precautions and programs in connection with the Work.

E. The Contractor shall, at all times, guard the Owner's property from injury or loss in connection with the Work. The Contractor shall, at all times, guard and protect the Contractor's Work. The Contractor shall replace or make good any said loss or injury unless said loss or injury is caused directly by the Owner.

F. The Contractor shall have full responsibility to install, protect and maintain all materials and supplies in proper condition and forthwith repair, replace and make good any damage thereto until Final Acceptance.

Section 10.02 - Adjoining Property

A. The Contractor shall be required to protect all the adjoining property and to repair or replace any such properties damaged or destroyed by the Contractor, its employees or subcontractors thereof, by reason of, or as a result of activities under, for or related to the Contract.

Section 10.03 - Emergencies

A. In case of an emergency which threatens loss or injury to persons or property, the Contractor will be allowed to act, without previous instructions from the Owner, in a diligent manner, to the extent required to avoid or limit such loss or injury, and the Contractor shall notify the Owner immediately thereafter of the action taken.

Section 10.04 - Bonds

A. Before commencing the performance of any work covered by the Contract, the Contractor shall furnish to the Owner any required Bonds. The failure of the Contractor to supply the required Bonds within ten (10) days after the Contract signing shall constitute a default on the part of the Contractor.

Section 10.05 - Risks Assumed by the Contractor

A. Indemnification. The Contractor shall defend, indemnify and hold harmless the Owner and its trustees, officers, agents and employees from and against all claims, damages, losses, fines, and expenses, including reasonable attorneys' fees, arising out of or resulting from the performance of the Work including, but not limited to, bodily or personal injury, sickness, disease, death, or injury or damage to tangible property, to the extent they arise out of or result from:

1. any negligent act or omission, or intentional or willful misconduct, violation of law, or breach of this Contract by the Contractor, or any of its subcontractors, anyone directly or indirectly employed by any of them, or anyone for whose acts any of them may be liable, or

2. any injury to an employee of the Contractor, its subcontractors, anyone directly or indirectly employed by them. The indemnification obligation under this section shall not be limited by the amount or type of damages, compensation or benefits payable by or for the Contractor under workers' compensation, disability benefit or other employee benefit laws.

B. In the event that Contractor is requested but refuses to fully comply with and honor its indemnification obligations hereunder, then the Contractor shall, in addition to all other obligations, pay the cost, including reasonable attorneys' fees, of bringing an action to enforce such indemnification obligations.

C. Neither the Owner's final acceptance of the work to be performed hereunder nor the making of any payment shall release the Contractor from its obligations under this Section. The enumeration elsewhere in the Contract of particular risks assumed by the Contractor or of particular claims for which the Contractor is responsible shall not be deemed to limit the effect of the provisions of this Section or to imply that the Contractor assumes or is only responsible for risk or claims of the type enumerated.

Section 10.06 - Contractor's Compensation and Liability Insurance

A. The Contractor shall procure and maintain, at its own cost and expense, until final acceptance by the Owner of all the work covered by this Contract, the following kinds of insurance:

1. Worker's Compensation Insurance. A policy complying with the requirements of the laws of the State of New York and any other laws that may be applicable thereto, including Coverage B - Employer's Liability with a limit of not less than $1,000,000.

2. Contractor's Comprehensive General Liability Insurance. A standard comprehensive general liability insurance policy, with contractual, completed operations, explosion, collapse and underground property damage coverage's issued to and covering the liability of the Contractor for all work and operations under this Contract, all obligations assumed by the Contractor under this Contract and all damage to work performed by subcontractors on your behalf. The Contractor shall provide Broad Form Comprehensive General Liability Insurance, and the Owner shall be an additional insured in the policy. The policy shall include cross liability coverage and shall be endorsed to indicate that it is primary coverage. The completed operations coverage's shall be maintained for not less than two years after acceptance of the work. The coverage under such policy shall be not less than a combined single limit for Bodily Injury and Property Damage as follows, or such limits carried by the Contractor, whichever is greater:

BODILY INJURY AND PROPERTY DAMAGE LIABILITY (BROAD FORM)	
$ 5,000,000	Each Occurrence
$ 5,000,000	Aggregate

3. Automobile Liability Insurance. A policy covering the use in connection with the Work covered by the Contract Documents of all owned, non-owned and hired vehicles bearing, or, under the circumstances under which they are being used, required by the Motor Vehicle Laws of the State of New York to bear license plates. The coverage under such policy shall be not less than a combined single limit for Bodily Injury and Property Damage of:

BODILY INJURY AND PROPERTY DAMAGE LIABILITY	
$ 1,000,000	Each Person
$ 1,000,000	Each Accident

B. In addition to maintaining all of the above insurances, the Contractor shall indemnify and hold harmless the Owner and its agents and employees from and against liability, including additional premium due because of the Contractor's failure to maintain coverage limits as required under this section.

C. Insurance similar to that required of the Contractor shall be provided by or on behalf of all subcontractors to cover their own operations performed under this Contract. The Contractor shall be held responsible for any modifications in these insurance requirements as they apply to subcontractors.

D. Before commencing the performance of any work covered by the Contract, the Contractor shall furnish to the Owner a current certificate or certificates, in duplicate, of the insurance required under the foregoing provisions including copies of subcontractor's certificates. Such certificates shall be on a form prescribed by the Owner, shall list the various coverage's and shall contain, in addition to any provisions hereinbefore required, a provision that the policy shall not be changed or cancelled and that it will be automatically renewed upon expiration and continued in force until final acceptance by the Owner of all the work covered by the Contract, unless the Owner is given thirty (30) days written notice to the contrary. Upon renewal of each of the Contractor's insurance coverage's, the Owner shall be provided with a new certificate of insurance showing such renewal. Certificates and written notices shall be directed to the Office of Facilities Contracts. The Contractor shall furnish the Owner with a certified copy of each policy including any and all exclusions to such policy.

E. If at any time any of the above required insurance policies should be cancelled, terminated or modified so that insurance is not in effect as above required, then, if the Owner shall so direct, the Contractor shall suspend performance of the work covered in the Contract. If the said work is so suspended, no extension of time shall be due on account thereof. The Owner may, at its option, obtain insurance affording coverage equal to that above required, at the Contractor's expense.

Section 10.07 - Liability Insurance of the Owner

A. The Owner, at its own cost and expense, shall procure and maintain such liability insurance as will, in its opinion, protect the Owner from its contingent liability to others for damages because of bodily injury, including death, and property damage which may arise from operations under this Contract.

Section 10.08 - Owner's and Contractor's Responsibilities for Fire and Extended Coverage Insurance Hazards

A. The Contractor shall purchase and maintain in force a builders risk insurance policy on the entire work. Such insurance shall be written on a completed value form and in an amount equal to the initial contract sum and modified by any subsequent modifications to the contract sum. The insurance shall name Cornell University and the State of New York, all subcontractors and sub- subcontractors. The insurance policy shall contain a provision that the insurance will not be cancelled or allowed to expire until the Contractor has given at least thirty (30) days prior written notice to Cornell University. The insurance shall cover the entire work at the site, including reasonable compensation for Architect's services and expenses made necessary by an insured loss. Insured property shall include portions of the work located away from the site and in transit to the site. The policy shall cover the cost of removing debris and demolition as may be legally necessary. The policy shall cover any boiler or machinery loss which may be suffered during installation and until final acceptance. The insurance required shall be written to cover "all risk" of physical loss including a loss due to collapse. Any deductible shall be the responsibility of the Contractor but in no case shall the deductible be more than $10,000 unless Cornell University has agreed to a higher deductible. The Contractor shall provide to Cornell University a certificate of insurance and a summary of coverage's including all endorsements and exclusions prior to commencement of the work. Once the policy is received, the Contractor shall provide a copy of such policy to Cornell University. There shall be a mutual waiver of recovery between Cornell University, the Contractor and all other parties to the extent such losses are covered by the builders risk policy. If Cornell University wishes to occupy the building prior to final acceptance and if the policy contains a provision which limits coverage for such partial

occupancy, the parties agree work together to obtain consent of the insurance company for such partial occupancy or use under mutually acceptable terms.

B. Losses, if any, under such insurance shall be payable to the Owner.

C. The Contractor shall be responsible for any and all loss of materials connected with the construction due to unexplainable disappearance, theft or misappropriation of any kind or nature.

D. The foregoing provisions shall not operate to relieve the Contractor and subcontractors of responsibility for any loss or damage to their own or rented property or property of their employees, of whatever kind or nature, or on account of labor performed under the Contract incidental to the repair, replacement, salvage, or restoration of such items, including but not limited to tools, equipment, forms, scaffolding, and temporary structures, including their contents, regardless of ownership of such contents, except for such contents as are to be included in and remain a part of the permanent construction. The Owner shall in no event be liable for any loss or damage to any of the aforementioned items, or any other property of the Contractor, subcontractors and the Architect, or employees, agents, or servants of same, which is not to be included in and remain a part of the permanent construction. The Contractor and subcontractors severally waive any rights of recovery they may have against the Owner and the Architect for damage or destruction of their own or rented property, or property of their employees of whatever kind or nature.

Section 10.09 - Effect of Procurement of Insurance

A. Neither the procurement nor the maintenance of any type of insurance by the Owner or the Contractor shall in any way be construed or be deemed to limit, discharge, waive or release the Contractor from any of the obligations and risks imposed upon the Contractor by the Contract or to be a limitation on the nature or extent of such obligations and risks.

Section 10.10 - No Third Party Rights

A. Nothing in the Contract shall create or give to third parties; any claim or right of action against the Contractor, the Architect, and the Owner beyond such as may legally exist irrespective of the Contract.

ARTICLE 11 -- USE OR OCCUPANCY PRIOR TO ACCEPTANCE BY OWNER

Section 11.01 – Substantial Completion

A. The term "substantial completion" means the completion of the Work to the extent that Cornell University may have uninterrupted occupancy or use of the facility or specified portion thereof for the purpose for which intended. The Contractor shall obtain all certificates of occupancy required prior to occupancy, and any electrical, mechanical and plumbing certificates, or other certificates or required approvals and acceptances by City, County, and State governments or other authority having jurisdiction.

Section 11.02 - Occupancy Prior to Acceptance

A. If, before Final Acceptance, the Owner desires Beneficial Occupancy of the Work, or any part thereof, which is completed or partly completed, or to place or install therein equipment and furnishings, the Owner shall have the right to do so, and the Contractor shall in no way interfere with or object to said Beneficial Occupancy by the Owner.

B. Said Beneficial Occupancy (1) shall not constitute acceptance of space, systems, materials or elements of the Work, nor shall said Beneficial Occupancy affect the start of any guarantee period, and (2) shall not affect the obligations of the Contractor for Work which is not in accordance with the requirements of the Contract or other obligations of the Contractor under the Contract.

C. The Contractor shall continue the performance of the Work in a manner which shall not unreasonably interfere with said use, occupancy and operation by the Owner.

ARTICLE 12 -- PAYMENT

Section 12.01 - Provision for Payment

A. The Owner agrees to pay the Contract Price to the Contractor for the performance of this Contract and the fulfillment of all the Contractor's obligations. The Contract Price means all costs reimbursable under the Contract Documents.

B. The final certificate of the Architect shall certify that the Contract has been completed within the stipulated time, and shall not be issued until all drawings and specifications have been returned to the Owner. The issuance of said certificates, however, or any payments made thereon shall not lessen the total responsibility of the Contractor to complete the work to the satisfaction of the Owner in accordance with the Contract.

C. Payments on the Contract Price shall be made each month as the work progresses in accord with the following procedure:

1. The Contractor's schedule of values, including quantities, aggregating the total Contract Price, divided so as to facilitate payments to subcontractors as specified herein, shall be the basis for monthly progress payments. This schedule, as shown in the E-Builder Schedule of Values Process, when approved by the Owner shall be used as a basis for progress payments. In applying for payments, the Contractor shall submit a statement based upon this approved schedule.

2. (a) On a date agreed upon by the Owner, Architect, and Contractor, a meeting shall be held by the Owner to review the work completed and materials on hand. This meeting shall review each item to be submitted by the Contractor in the requisition for payment.

   (b) On the first day of each month, or as soon thereafter as practicable, the Contractor shall submit via the E-Builder Payment Application Process, a statement and all applicable documentation setting forth in detail the cost of the work done and materials delivered to the job site up to and including the last day of the previous month and shall make

application for payment of ninety percent (90%) of the amount of said statement, less the aggregate of all previous payments made by the Owner against the Contract Price.

(c) Each statement and application shall be accompanied by an affidavit, executed by the Contractor, certifying that the statement is true and correct, and that all bills for labor, and materials incorporated in or delivered to the job, due and payable at the time of the preceding progress payment, have been paid. The Contractor shall attach a single .pdf file of certified payrolls for all employees on the project as indicated in the E-Builder Payment Application Process. Before final payment is made, the Contractor shall submit evidence that all payrolls, material bills and other indebtedness incurred in connection with the Contract have been paid, including final waivers of any liens.

3. Each such application for payment shall be subject to the review and approval of the Architect. If the Architect finds that the affidavit and application for payment are acceptable and that all the above requirements in connection therewith have been complied with, the Architect shall, within seven (7) calendar days after receiving such application for payment, certify to the Owner that the payment applied for is due and payable to the Contractor.

4. The issuance of a Certificate for Payment constitutes a representation by the Architect to the Owner, based on the date of the Application for Payment, that the work has progressed to the point indicated, that, to the best of their knowledge, information, and belief, the quality of the work is in accordance with the Contract Documents and that the Contractor is entitled to payment in the amount certified.

The Owner shall make payment in the manner provided in the Agreement within thirty (30) calendar days of receipt of the approved Certificate in E-Builder.

Approval of the Payment Application by the Architect shall not be deemed to represent that the Architect has made exhaustive or continuous on-site inspections to check the quality or quantity of the work or that the Architect has reviewed the construction means, methods, techniques, sequences, or proceedings or that the Architect has made any examination to ascertain how or for what purpose the Contractor has used the monies previously paid on account of the Contract Sum.

Section 12.02 – Stored Materials & Equipment

A. The Contractor may submit, no more than thirty (30) calendar days after contract approval and prior to the first application for payment, a written request to Cornell University for permission to invoice for critical materials and equipment ready, but not yet incorporated into the work. For the purpose of this paragraph, "critical materials and equipment" eligible for payment are defined as those items affecting project schedule or budget as determined by Cornell University's evaluation of the project schedule. This includes finished goods normally shipped to the job site in a condition ready for incorporation into the work that require significant time for delivery. Raw materials or work-in-process at a manufacturer's plant location shall not be eligible

for such consideration unless the Contractor can demonstrate that Cornell University can save money by purchasing material in bulk quantities at the beginning of the project.

B. Cornell University will be under no obligation to accept such requests.

C. Payment authorized by Cornell University for such "long-lead" critical materials and equipment not yet incorporated in the work will be made provided the Contractor submits Exhibit H and complies with the following:

1. Items shall be listed in the “Total Materials Presently Stored” column on the Application for Payment.

2. Transfer of Title shall be executed and included in the Application for Payment.

3. The method used to store off-site items shall be described in the Contractor's request to invoice for such materials and equipment. Cornell University shall give prior approval of the location of off-site storage. Items requiring special environmental conditions to protect their integrity (temperature, humidity, etc.) shall be continuously stored in such an environment.

4. Items in storage shall be identified as property of Cornell University, and a description of the identification method used shall be submitted in the Application for Payment. Contractor shall maintain all necessary insurance on items in storage.

5. A written and photographic inventory of items and method used to verify such inventory, including Contractor's certification that all quantities have been received in good condition at the job site or other location acceptable to Cornell University shall be submitted with the Application for Payment.

6. A copy of the vendor's invoice is included with the Contractor's invoice. Packing lists will not be accepted.

D. Cornell University retains the right to verify storage by physical inspection prior to payment approval and at any time thereafter. Such payment shall not relieve the Contractor of the responsibility for protecting, safeguarding, and properly installing the equipment or materials. The Warranty and Guarantee period shall not commence until installation and final acceptance of the completed work by Cornell University. The Contractor shall bear the cost of transporting materials stored off-site to the site

E. Each subsequent invoice will restate the prior months' materials and equipment not incorporated in the Work and current month additions and deletions for materials and equipment incorporated into the Work.

F. Upon the making of partial payment by Cornell University, all work, materials, and equipment covered thereby shall become the sole property of Cornell University. Partial payments, however, shall not constitute acceptance of the Contractor's work by Cornell University, nor be construed as a waiver of any right or claim by Cornell University.

Section 12.03 – Retention

A. Retention in the amount of ten percent (10%) of the value of the Work done and materials furnished and installed under this Agreement shall be retained by the Owner as part security for the faithful performance of the Contractor's work within the time specified, and shall be paid as indicated in Section 12.06.

B. Cornell University in its sole discretion may, upon the Contractor's application thereof, release retention applicable to a subcontractor, provided that there are no outstanding claims associated with the subcontractor's work and the subcontractor and Contractor submit an acceptable partial or final release when submitting the payment application process. If the project is bonded, a Consent of Surety to the reduction must be attached as well.

Section 12.04 - Withholding Payments

A. The Owner may, on account of contemporaneous or subsequently discovered evidence, withhold or nullify the whole or a part of any Certificate to such extent as may be necessary to protect the Owner from loss on account of:

1. Defective work not remedied.

2. To assure payment of just claims of any persons supplying labor or materials for the work and to discharge any lien filed against the Owner's property.

3. A reasonable doubt that the Contract can be completed for the balance of the Contract Price then unpaid.

4. Damage to another Contractor.

5. Unsatisfactory prosecution of the work by the Contractor.

6. Failure to provide and maintain an acceptable Critical Path Method Network Schedule.

Section 12.05 – Documents and Conditions Precedent to Final Payment

A. As-Built Documentation

1. Prior to acceptance by the Owner of all work covered by the Contract, the Contractor shall furnish to the Owner through the Architect one (1) set of current reproducible full-size Contract Drawings on which the Contractor has recorded in a neat and workmanlike manner all instances where actual field construction differs from work as indicated on the Contract Drawings.

B. Final Documentation:

1. Prior to final payment, and before the issuance of a final certificate for payment in accordance with the provisions of these General Conditions, file the following documents with the Owner.

a. Warranties, Bonds, Service & Maintenance Contracts and any other extended guarantees stated in the technical sections of the Specifications.

b. Release or Waiver of Lien for the Contractor and Sub-Contractors in accordance with Exhibit C, attached hereto.

c. Project Record Documents as defined in General Requirements Section 01 78 39.

d. Notification that Final Punch List work has been completed.

e. Manufacturers Instruction and Maintenance Manuals as defined in General Requirements Section 01 78 23.

f. Fixed Equipment Inventory as defined in General Requirements Section 01 78 22.

2. The Contractor shall also provide a CD containing scanned .pdf format and/or Word Documents of all documentation.

Section 12.06 - Final Payment and Release

A. When the Contractor determines that the work or a designated portion thereof is substantially complete, the Contractor shall prepare for submission to the Owner a list of items to be completed or corrected. This list, prepared by the Contractor, shall constitute a complete detailed list of defects and deficiencies which, when remedied, will complete all Contract requirements. The submittal shall be accompanied by a statement to that effect.

B. The failure to include any items on such list does not alter the responsibility of the Contractor to complete all work in accordance with the Contract Documents. When the Architect, on the basis of an inspection, determines that the work is substantially complete, the Architect will then prepare a Certificate of Substantial Completion.

C. Upon receipt of written notice that the work is ready for final inspection and acceptance, the Architect will promptly make such inspection and, when the Architect finds the work acceptable under the provisions of the Contract Documents, and the Contract fully performed, and if bonds have been required, the written Consent of the Surety to the payment of the balance due, and a satisfactory Release of Lien, attached hereto as Exhibit "C" and made a part of the Contract Documents, has been submitted by the Contractor, each subcontractor and sub-subcontractor, the Contractor will promptly issue a final Certificate for Payment, stating that to the best of their knowledge, information, and belief, and on the basis of their observations and inspections the work has been completed in accordance with the terms and conditions of the Contract Documents, and that the entire balance is due and payable.

D. All prior certificates upon which progress payments may have been made, being estimates, shall be subject to correction to the final certificate.

E. The acceptance by the Contractor of the final payment aforesaid shall constitute a general release of the Owner and its agents or representatives from all claims and liability to the Contractor.

ARTICLE 13 -- TAX EXEMPTION

Section 13.01 - Tax Exemption

A. The Owner is exempt from payment of Federal, State and local taxes, including sales and compensating use taxes on all materials and supplies incorporated into the completed Work. These taxes are not to be included in bids. This exemption does not apply to tools, machinery, equipment or other property leased by or to the Contractor or a Subcontractor, or to supplies and materials which, even though they are consumed, are not incorporated into the completed Work, and the Contractor and Subcontractors shall be responsible for and pay any and all applicable taxes, including sales and compensating use taxes, on said leased tools, machinery, equipment or other property and upon all said unincorporated supplies and materials.

B. The Contractor and Subcontractor shall obtain any and all necessary certificates or other documentation from the appropriate governmental agency or agencies, and use said certificates or other documentation as required by law, rule or regulation.

ARTICLE 14 -- GUARANTEE

Section 14.01 - Guarantee

A. The Contractor, at the convenience of the Owner, shall remove, replace and/or repair at their own costs and expense any defects in workmanship, materials, ratings, capacities or characteristics occurring in or to the work covered by Contract for the period of one (1) year or within such longer period as may otherwise be provided in the Contract, the period of such guarantee to commence with the Owner's final acceptance of all work covered under the Contract, and the Contractor, upon demand, shall pay for all damage to all other work resulting from such defects and all expenses necessary to remove, replace and/or repair such work which may be damaged in removing, replacing or repairing the said defects. Acceptance means final acceptance of the entire work, early partial occupancy notwithstanding

B. In some instances the nature of the work may require the Owner to accept various components, equipment, spaces or phase of the project. In such cases the Contractor shall submit a separate guarantee for the Owner's acceptance on the form attached hereto as Exhibit "E". Upon completion of the project, the Contractor shall submit to the Owner a guarantee for the project on the form attached hereto as Exhibit "E".

ARTICLE 15 -- STANDARD PROVISIONS

Section 15.01 - Provisions Required by Law Deemed Inserted

Each and every provision of law or clause required by law to be inserted in the Contract and made a part hereof, shall be deemed to be inserted herein and, in the event any such provision is not inserted or is not correctly inserted, then upon the application of either party, this Contract shall forthwith be physically amended to make such insertion or correction.

Section 15.02 - Laws Governing the Contract

The Contract shall be governed by the laws of the State of New York, without reference to conflict of law principles. Any and all proceedings relating to the subject matter hereof shall be maintained in New York State Supreme Court, Tompkins County or the federal district court for the Northern District of New York, which courts shall have exclusive jurisdiction for such purposes.

Section 15.03 - Assignments

The Contractor shall not assign the Contract in whole or in part without prior written consent of the Owner.

Section 15.04 - No Third Party Rights

Nothing in the Contract shall create or shall give to third parties any claim or right of action against the Owner, beyond such rights as may legally exist irrespective of the Contract.

Section 15.05 - Waiver of Rights of Owner

A. None of the provisions of the Contract will be considered waived by the Owner except when such waiver is given in writing.

Section 15.06 - Limitation on Actions

No action or proceeding shall be filed or shall be maintained by the Contractor against the Owner unless said action shall be commenced within six (6) months after receipt by the Owner of the Contractor's final requisition or, if the Contract is terminated by the Owner, unless said action is commenced within six (6) months after the date of said termination.

Section 15.07 - Owner's Representative

The Owner shall designate a representative authorized to act in its behalf with respect to the Project. The Owner or its representative shall examine documents and shall render approvals and decisions pertaining thereto promptly, to avoid unreasonable delay in the progress of the Contractor's work. Only directives from Cornell University's designated representative (Alex Chevallard) shall be recognized by the Contractor.

ARTICLE 16 – MINORITY AND WOMEN BUSINESS ENTERPRISES

Section 16.01 – Definitions

The terms "Minority-owned business enterprise" ("MBE") or "Women-owned business enterprise" ("WBE") or "minority group member" shall have the same meaning as under Section 310 of the New York State Executive Law, as the same may be from time to time amended.

Section 16.02 – Participation by Minority and Women Business Enterprises

A. The Contractor shall, in addition to any other nondiscrimination provision of the Contract and at no additional cost to Owner, fully comply and cooperate with the Owner in the implementation of MBE and WBE programs. These requirements include equal employment opportunities for minority group members and women ("EEO") and contracting opportunities for certified minority and women-owned business enterprises ("MWBEs"). The Contractor's demonstration of "good faith efforts" shall be a part of these requirements. These provisions shall be deemed supplementary to, and not in lieu of, the nondiscrimination provisions required by New York State or other applicable federal, state or local laws.

B. The Contractor shall include the provisions of this Article in each and every Agreement and/or Contract in such a manner that the provisions of this Article will be binding upon each subcontractor and supplier as to work in connection with and related to this Agreement.

C. For purposes of this procurement:

Facilities and Campus Services supports Cornell University's ongoing commitment to encourage business opportunities and diversity among its vendor community by promoting minority owned and controlled business' development as a shared responsibility. The University's intention is to create and expand opportunities for minority, women, veteran, LGBTQ, small and locally owned businesses through construction labor opportunities and the procurement of goods and services.

Positive good faith efforts to advance the University's objectives shall be made by all Contractors, engaging, and maximizing these diverse enterprise goals, and to positively drive Cornell's economic impact.

<u>Cornell University Diversity Council Statement</u>:

> "Cultivate partnerships with the widest spectrum of Off-Campus entities and include a fully diverse range of Off-Campus participants in Cornell's events, contracts, services, and initiatives."

Section 16.03 – Reports and Records

A. The following forms, attached hereto as Exhibit "D" and made a part of the Contract Documents, are to be used in submitting MBE/WBE Utilization Reports when requested by the Owner.

1. MWBE Utilization Report
2. Affirmative Action Workforce Report

B. The Contractor shall submit an Affirmative Action Workforce Report on a monthly basis, or as requested by Owner. The Contractor shall provide a single monthly report, or as requested by the Owner, inclusive of all subcontractor information for the project labor and such report must document the use of MWBE businesses in the Contract.

ARTICLE 17 -- ACCOUNTINGS, INSPECTION AND AUDIT

The Contractor agrees to keep books and records showing the actual costs incurred for the Work. Such books and records (including, without limitation, any electronic data processing files used by the Contractor in analyzing and recording the Work) shall be open for inspection and audit by the Owner and its authorized representatives at reasonable hours at the Contractor's local office or at the Owner's office, if necessary, and shall be retained by the Contractor for a period of seven years after the Work has been completed, except that if any litigation, claim or audit is started before the expiration date of the seven year period, the records shall be retained until all litigation, claims or audit findings involving the records have been resolved.. Each Sub-Contractor shall be similarly obligated to maintain, for inspection and audit by the Owner, books and records respecting the Work. If requested by the Owner, the Contractor shall furnish copies of any and all subcontracts, purchase orders and/or requisitions of any nature associated with the project.

ARTICLE 18 – CONTRACTOR PERFORMANCE EVALUATION

At project completion the Owner shall schedule a meeting to review with the Contractor their performance for the project unless performance warrants additional reviews. The Owner may schedule a meeting at fifty percent (50% completion) based on project complexity and/or duration. The Owner shall present its review based on the attached "Contractor Performance Evaluation", Exhibit I. The Contractor shall be given the opportunity to provide input as to the findings of the evaluation after completion by the Owner.

ARTICLE 19 -- ROYALTIES AND PATENTS

The Contractor shall pay all royalties and license fees and shall defend all suits or claims for infringement of any patents, and shall save Cornell University harmless from loss on account thereof; except that Cornell University shall be responsible for all such loss when a particular process or product is specified by Cornell University unless the Contractor shall have reason to believe that the particular process or product infringes a patent, in which event it shall be responsible for loss on account thereof unless it promptly provides such information to Cornell University.

ARTICLE 20 -- CONFIDENTIALITY AND USE OF OWNER'S NAME

Section 20.01 - Release of Information

The Contractor shall not divulge information concerning the Work (including news releases, social media, internal house organizations, applications for permits, etc.) to anyone without Cornell University's prior written approval, except to subcontractors and suppliers to the extent that they need such information to perform their work. The Contractor shall require a similar agreement from each such subcontractor and supplier, requiring their compliance with the foregoing. Cornell University reserves the right to release all information, as well as to time its release and specify its form and content. The Contractor may obtain Cornell University's approval to release information by submitting such request to the Cornell University Project Manager.

Section 20.02 - Confidential Information

The term "Confidential Information" means all unpublished information obtained or received from Cornell University during the term of this Contract which relates to Cornell University's research, development, manufacturing and business affairs. The Contractor shall not disclose confidential information to any person, except to its employees and subcontractors to the extent that they require it in the performance of their Work, during the term of this Contract and until authorized by Cornell University in writing. The Contractor and its subcontractors shall hold all confidential information in trust and confidence for Cornell University, and shall use confidential information only for the purpose of this Contract. The Contractor and its subcontractors shall require all of their employees to whom confidential information is revealed to comply with these provisions. The Contractor shall have an agreement with each subcontractor, requiring their compliance with the foregoing. If it becomes necessary for the Contractor to defend in case of litigation related to its services rendered, permission shall be sought from Cornell University, who shall not unreasonably withhold such permission, before any disclosures are made. This Section does not apply to information which (1) is or becomes known in public domain or (2) is learned by the Contractor from third parties.

Section 20.03 - Use of Owner's Name on Non-Work Related Content

The Contractor shall not use or permit on the job site, in its external, advertising, marketing program, social media, or other promotional efforts, any date, pictures, or other content unrelated to the Contracted Work, or any representation of the Owner except on the specific written authorization in advance of the Owner's Representative.

ARTICLE 21 -- CORNELL UNIVERSITY STANDARDS OF ETHICAL CONDUCT

Cornell University expects all executive officers, trustees, faculty, staff, student employees, and others, when acting on behalf of the university, to maintain the highest standard of ethical conduct as per Cornell University's Policy 4.6 - Standards of Ethical Conduct, a copy of which is available at https://fcs.cornell.edu/project-contractors-and-consultants This includes treating equally all persons and firms currently doing business with or seeking to do business with or for Cornell University, whether as contractors, subcontractors, or suppliers. Such persons and firms are respectfully reminded that Cornell University employees and their families may not personally benefit from Cornell University's business relationships by the acceptance of gifts or gratuities, defined as a gift in excess of $75.00 given to a Cornell employee for personal use. Items not considered gifts/gratuities include occasional business meals, items of an advertising nature, and items that are generally distributed to all potential customers. In addition, it is expected that the Contractor's officers and employees shall conduct all business related to this Contract within the highest ethical standards, observing applicable policies, practices, regulations, law, and professional standards. All parties are expected to report violations of this policy to appropriate university personnel. You may file a report to on the web https://secure.ethicspoint.com/domain/en/report_custom.asp?clientid=6357 or contact Cornell University through EthicsPoint by dialing toll-free 1-866-293-3077.

CORNELL UNIVERSITY

Construction Contract Change Order Forms
Instructions to Change Order Documentation

Cornell University has several standard forms related to Changes in the Work. These forms have been prepared to comply with contract requirements related to Changes in the Work. The standard Construction Contract Change Order Request and Change Order Summary Forms shall be used to facilitate preparation of change order requests in conformity with construction contract requirements.

These forms shall be used by the Contractor and by all Subcontractors in preparing their respective cost estimates for services associated with the Changed Work for the Owner's consideration and shall include all associated back-up documentation supporting the request.

Direct Cost of the Work:

1. **Direct Labor –** Include the "wages paid" hourly direct labor and/or foreman necessary to perform the required change. "Wages paid" is the burdened labor rate documented in accordance with Section 2.14 – Project Labor Rates of the General Conditions. "Assigned Personnel or Work Crews" should be stated by trade or type of work performed not by name of person or company title. For example carpenter, mason, backhoe operator, etc. Supervisory personnel in district or home office shall not be included. Supervisory personnel on the job-site, but with broad supervisory responsibility and paid as salaried personnel, shall not be included as Direct Labor

2. **Direct Material –** Include the acquisition cost of all materials directly required to perform the required change. Examples of "Unit of Measure" include square feet, cubic yards, linear feet, days, gallons, etc.

3. **Equipment –** Include the rental cost of equipment items necessary to perform the change. For company-owned equipment items, include documentation of internal rental rates. Charges for small tools, and craft specific tools are not allowed.

Bond Premiums

The Contractor's actual documented bond premium rate as entered into the eBuilder Bid Portal Response Form – Step 3 – Additional Required Information Custom Fields at time of bid shall be added to all direct and indirect costs of the proposed change.

Overhead & Profit

The Contractor's overhead & profit rate shall be added to all direct and indirect costs of the proposed change in accordance with the Contract.

EXHIBIT "A"

CONSTRUCTION CONTRACT CHANGE ORDER REQUEST

DATE: _____ COR # _____

PROJECT TITLE: CONTRACT NO. _____

❑ Name of Contractor/Subcontractor performing Work: _____

DESCRIPTION OF WORK: _____

_____

_____

A. DIRECT COST OF WORK:

1 LABOR (Attach Supporting Documentation)

ASSIGNED PERSONNEL OR WORK CREW	HOURLY WAGE RATE PAID	HOURS WORKED	TOTAL COST
			$0
			$0
			$0
			$0
		LABOR TOTAL	$0

2 MATERIAL (Attach Supporting Documentation)

MATERIAL REQUIRED FOR CHANGE	UNIT PRICE	UNIT OF MEASURE	REQUIRED UNITS	TOTAL COST
				$0
				$0
				$0
				$0
			MATERIAL TOTAL	$0

3 EQUIPMENT (Attach Supporting Documentation)

EQUIPMENT REQUIRED FOR CHANGE	UNIT PRICE	UNIT OF MEASURE	REQUIRED UNITS	TOTAL COST
				$0
				$0
				$0
				$0
				$0
			EQUIPMENT TOTAL	$0

4	DIRECT COST (SUM 1, 2, 3)	$0
5	OH&P Rate _____	$0

6 SUBCONTRACTOR (Attach Supporting Documentation)

SUB-SUBCONTRACTOR REQD FOR CHANGE	SUB-SUB COST OF WORK	SUB-SUB MARK UP %	TOTAL COST
			$0
			$0
			$0
		SUB-SUBCONTRACTOR TOTAL	$0

7 OVERHEAD AND PROFIT	OH&P Rate _____	$0
	TOTAL COST PLUS OH&P (SUM 4, 5, 6, 7)	$0
8 BOND PREMIUM (If applicable)	Bond Premium Rate _____	$0
	TOTAL COR COST	$0
	TOTAL CONTRACT DAYS ADDED/DELETED FROM PROJECT SCHEDULE	0

EXHIBIT "A"

CONSTRUCTION CONTRACT CHANGE ORDER SUMMARY

DATE: _____

PCO # _____

PROJECT TITLE: _____

CONTRACT NO. _____

CONTRACTOR: _____

DETAILED DESCRIPTION OF WORK: _____

1 **DIRECT COST OF WORK:**

NAME OF CONTRACTOR/SUBCONTRACTORS PERFORMING WORK	TOTAL COST

TOTAL COST OF PROPOSED CHANGE ORDER ITEM $0

TOTAL CONTRACT DAYS ADDED/DELETED FROM PROJECT SCHEDULE

THIS PAGE INTENTIONALLY LEFT BLANK

EXHIBIT "B"

FINAL RELEASE

FINAL WAIVER OF CLAIMS AND LIENS AND RELEASE OF RIGHTS

Date	_____	Contract Date	_____
Project	_____	Contract Price	_____
Address	_____	Net Extras and Deductions	_____
City	_____	Adjusted Contract Price	_____
County	_____	Amount Previously Paid	_____
State	_____	Balance Due - Final Payment	_____

The undersigned hereby acknowledges that the above Balance Due when paid represents payment in full for all labor, materials, etc., furnished by the below named Contractor or Supplier in connection with its work on the above Project in accordance with the Contract.

In consideration of the amounts and sums previously received, and the payment of $_____being the f hereafter thereon, and upon the monies or other considerations due or to become due from the Owner or from any other person, firm or corporation, said claims, liens and rights of liens being on account of labor, services, materials, fixtures or apparatus heretofore furnished by the below named Contractor or Supplier to the Project. The premises as to which said claims and liens are hereby released are identified as follows:_____ _____.

The undersigned further represents and warrants that he/she is duly authorized and empowered to sign and execute this waiver on his/her own behalf and on behalf of the company or business for which he/she is signing; that it has properly performed all work and furnished all materials of the specified quality per plans and specifications and in a good and workmanlike manner, fully and completely; that it has paid for all the labor, materials, equipment and services that it has used or supplied, that it has no other outstanding and unpaid applications, invoices, retentions, holdbacks, expenses employed in the prosecution of work, chargebacks or unbilled work or materials against the Owner as of the date of the aforementioned last and final payment application; and that any materials which have been supplied or incorporated into the above premises were either taken from its fully-paid or open stock or were fully paid for and supplied on the last and final payment application or invoice.

The undersigned further agrees to defend, indemnify and hold harmless the Owner for any losses or expenses (including without limitation reasonable attorneys' fees) should any such claim, lien or right of lien be asserted by the below named Contractor or Supplier or by any of its or their laborers, material persons or subcontractors.

In addition, for and in consideration of the amounts and sums received, the below named Contractor or Supplier hereby waives, releases and relinquishes any and all claims, rights or causes of action in equity or law whatsoever arising out of through or under the above mentioned Contract and the performance of work pursuant thereto.

The below named Contractor or Supplier further guarantees that all portions of the work furnished and installed are in accordance with the Contract and that the terms of the Contract with respect to this guarantee will remain in effect for the period specified in said Contract.

_____
Corporation or Business Name

Sworn to before me this

_____ Day of _____ 20__

By: _____

_____

Title: _____

THIS PAGE INTENTIONALLY LEFT BLANK

EXHIBIT "C"

GUARANTEE

Date: _____

In accordance with plans and specifications and the terms and conditions of our contract with Cornell University dated _____, we hereby guarantee the _____ as found in the specifications for _____, Ithaca, New York to be free
(Project Title)

from defects in materials and workmanship for the period of _____ year(s) from _____, the date of acceptance by the Owner.
(Date)

_____
(COMPANY)

By: _____

Title: _____

THIS PAGE INTENTIONALLY LEFT BLANK

MWBE Utilization Report

PART I – PROJECT INFORMATION

e-Builder Project No.	Project Name:	Contract Value:
Contractor Name and Address:	Primary Contact Name, Phone Number, Email:	Bid Date:
Contractor's MWBE Contact Name, Phone Number, Email:		

PART II – MWBE LIST (*Update as MWBE firms come under contract, sign and date, resubmit)*

Subcontractor Name, Address, Contact, Email, MBE or WBE *(List your firm if also MBE or WBE)*	Federal ID Number	Dollar Value of Contract or Purchase Order	Description of Work or Supplies	Subcontractor or Supplier Start and End Dates

(Update totals as MWBE firms are added/subtracted to above list)

Print Name of Principal or Officer:	Title:
Signature:	Date:

EXHIBIT "D" – FORM I

CORNELL UNIVERSITY FOUNDED A.D. 1865

MWBE Utilization Report

PART III – Quarterly Utilization Report *(Subcontractors & Sub-subcontractors fill this out and submit to General Contractor to compile into a single form.)* Double click on table to edit.

Month/Year:

General Contractor, Subcontractor, Sub-Subcontractor, or Vendor	Trade	Dollar Value of SubContract or Purchase Order	MBE, WBE, or N/A	% of Total Contract
TOTALS		0		0

SUMMARY OF BID ACTIVITY WITH MBE AND WBE SUBCONTRACTORS AND VENDORS

Please print or type all information, except where a signature is required.

PROJECT: _____

Name of Prime Contract Bidder:

_____

Address (Street, City, State and Zip Code):

_____

Contact Person (Name, Title and Telephone Number):

_____

MBE and WBE Subcontractor/Vendor (Indicate which)	Item/ Trade	Bid Submitted: Date	Bid Submitted: Amount	Award Status Date	Award Status Amount	Date of Elimination

EXPLANATION OF ELIMINATION: Include meetings held for negotiation, etc.
(Use additional sheet if necessary)

OFFICER OF FIRM:

Name and Title: _____ Date: _____

Signature:

_____

EXHIBIT "D" - FORM III

CORNELL UNIVERSITY

Please print or type all information.

PROJECT

PRIME CONTRACTOR

AFFIRMATIVE ACTION WORKFORCE REPORT

Contract No. _____

For the period of _____ (Month/Year)

Prime Contractor, Subcontractor and Sub-Subcontractor's Name	Craft and/or Trade	Local Union #	Total of All Employee Hours By Trade	Non-Hispanic / Caucasian		Black		Hispanic		Asian / Pacific Islander		American Indian / Alaskan Native		Minority Employee Hours as a Percentage of Total Employee Hours	Total Number of Employees		Total Number of Minority Employees	
				Hours Male	Hours Female	Hours Male	Hours Female	Hours Male	Hours Female	Hours Male	Hours Female	Hours Male	Hours Female		Male	Female	Male	Female
MONTHLY PROJECT TOTALS																		

NOTE: The Prime Contractor shall provide a single monthly report inclusive of all subcontractor information for the project.

EXHIBIT "E"

LABOR RATE BREAKDOWN

PROJECT TITLE: _____ **CONTRACT NO.** _____

CONTRACTOR: _____ **TRADE:** _____

EFFECTIVE DATE: _____
EXPIRATION DATE: _____

Base Hourly Rate: $ _____

Payroll Taxes and Insurance	**% per Hour**
F.I.C.A.	_____
Federal Unemployment *(Base on 1500 hours of work)*	_____
State Unemployment *(Base on 1500 hours of work)*	_____
* Worker's Compensation	_____
* Bodity Injury & Property Damage	_____
Disability	_____
TOTAL	_____ %

Payroll Taxes and Insurance Rates: Base Rate (x) Total % = $ _____

* Rates are net Contractor cost after premium discounts and experience modifications have been applied against manual rate.

Supplemental Benefits	**$ per Hour**
Vacation	_____
Health & Welfare	_____
Pension	_____
Annuity	_____
Education / Training	_____
Industry	_____
_____	_____
_____	_____
_____	_____
_____	_____

Total Hourly Fringe Benefits $ _____

Hourly Labor Rate: Base Rate, Taxes/Insurance and Fringe Benefits $ _____

Adjustment for a composite rate which includes apprentices: $ _____

CONTRACTOR'S CERTIFICATION

I certify that the labor rates, insurance enumerations, labor fringe enumerations and expenses are correct and in accordance with actual and true cost incurred.

Signature of Authorized Representative:

_____

Print Name: _____

Print Title: _____

THIS PAGE INTENTIONALLY LEFT BLANK

EXHIBIT "F"

STORED MATERIALS INVOICING DOCUMENTATION

PROJECT TITLE: _____

CONTRACTOR: _____ **SUBCONTRACTOR:** _____ **CONTRACT NO.** _____

REASON FOR REQUEST: _____

_____

_____

APPLICATION FOR PAYMENT NO. _____ **DATE:** _____

1 **Material Identification**

Description:

_____

_____

Quantity:

_____

_____

_____

_____

_____

Provide Specific Location of Materials Stored:

_____

_____

_____

_____

2 **Material Value**

☐ Attach an Invoice or Quantified Statement of Value. $ _____

3 **Certificate of Insurance**

☐ Attach a Certificate of Insurance for the above specified materials. Certificate shall name "Cornell University" as a loss payee with respect to the specified materials.

4 **Transfer of Title**

The Contractor hereby agrees to transfer complete ownership of all listed materials to Cornell University at the time payment is made to Contractor for the above referenced Application for Payment. The Contractor remains responsible for all contractual requirements for the above listed materials including complete installation and providing of all warranties.

Signed:

_____

Date:

_____

THIS PAGE INTENTIONALLY LEFT BLANK

EXHIBIT "G"

Cornell University

Contractor Performance Evaluation

Project Information

Project Name:_____ Date Of Evaluation_____

Project Number_____ Evaluators;

Project Team_____

Campus_____

Project Start Date_____ Substantial Completion_____

Contractor_____ Prequalification Status_____

Original Contract Amount_____ Total Change Order Amount_____

Contractor Project Manager_____ Initial Evaluation_____

Contractor Superintendent_____ Final Evaluation_____

Type Of Contract

Prime Contractor___ Subcontractor___ Construction Manager___

Project Comments/Description

Performance Evaluation

Please give one rating for each category. Add comments as required to justify your rating.

Fails to Achieve Expectation	Needs Improvement	Fully Achieve Expectation	Freq Exceeds Expectation	Cons Exceed Expectation
1	2	3	4	5

1 Quality of Workmanship

Rate this contractor's performance in regards to quality of work

a. Compliance with project drawings and specifications
b. Workmanship quality and accuracy
c. Tools- quality and sufficient quantity
d. Equipment - sufficient quantity and operating condition
e. Quality of jobsite craft personnel

Comments:

2 Scheduling/Productivity

Rate this contractor's performance with regard to producing and meeting contract schedules and milestones

a. Project schedule quality and completeness
b. Controlling of project schedule
c. Manpower allocation for maintaining schedule
d. Material deliveries to support project schedule
e. Ability to meet substantial completion date and project milestones
f. Productivity of work force
g. Ability to deal with added work and unforeseen issues.

Comments:

3 Subcontractor Management

Rate this contractor's ability, effort and success in managing and coordinating subcontractors ***(if no subcontractors rate overall management performance)***

Comments:

3A Major subcontractor performance(score not added in final Contractor Evaluation

For contractor information only

a. Plumbing Contractor overall Performance

Comments:

b. HVAC Contractor overall Performance

Comments:

c. Electrical Contractor overall Performance

Comments:

Fails to Achieve Expectation	Needs Improvement	Fully Achieve Expectation	Freq Exceeds Expectation	Cons Exceed Expectation
1	2	3	4	5

4 MBE/WBE Participation

Rate this contractor's MBE/WBE solicitation effort and participation for this project for, Project Team, Subcontractors, Material Vendors

Comments:

5 Safety

Rate this contractor's performance in regards to project safety

a. Timely submission of site specific safety program
b. Knowledge of OSHA standards
c. Implementation of safety rules and regulations
d. Promotion and creation of safety awareness
e. Daily overall housekeeping
f. Safety record
g. Response to safety concerns
h. Awareness of public safety

Comments:

6 Contract Administration

Rate this contractor's performance in regards to contract administration as per criteria below

a. Timely submission of complet and correct documentation required for insurance and bond
b. Change order processing
c. Timely submission of RFI's, Shop Drawings, and change orders
d. Subcontractor payments made promptly
e. Timely submission of complete and correct payment applications
f. Quality of paperwork

Comments:

7 Working Relationships

Rate this contractor's working relationships with other parties (Cornell, Design Team, subcontractors,ect.)

Comments:

Fails to Achieve Expectation	Needs Improvement	Fully Achieve Expectation	Freq Exceeds Expectation	Cons Exceed Expectation
1	2	3	4	5

8 Supervisory Personnel Rating

Rate the overall performance of this contractor's on site supervisory personnel and project management staff

Comments:

9 Contract Close-Out

Rate this contractor's overall ability to efficiently close out the project

a. Timely completion of all punchlist items
b. Timely resolution of all outstanding change orders
c. Timely submission of all close out documents(O&M's, As-Builts, warranties, final releases and consent of surety)
d. Quality of close out documentation and timely completion of any outstanding audit questions

Comments:

Summary Sheet

Project:_____
Contractor:_____

	Performance Categories	Rating Per Category	Weight %	Scoring
1	Quality of Workmanship	0	15.00%	0
2	Scheduling	0	10.00%	0
3	Subcontractor Management	0	10.00%	0
4	MBE/WBE Participation	0	10.00%	0
5	Safety	0	10.00%	0
6	Contract Administration	0	10.00%	0
7	Working Relationships	0	10.00%	0
8	On Site Supervisory Personnel Rating	0	18.00%	0
9	Contract Close Out	0	7.00%	0

Over All Rating 0

Rating Reference	
Fails to achieve expectation	1
Needs improvement	2
Fully achieves expectation	3
Frequently exceeds expectation	4
Consistently exceeds expectatio	5

OWNER COMMENTS:

OWNER COMMENTS on 3A Ratings:

CONTRACTOR COMMENTS:
(To be completed by Contractor prior to Owner/Contractor discussion meeting)

THIS PAGE INTENTIONALLY LEFT BLANK

HEALTH AND SAFETY PLAN REQUISITES FOR CONSTRUCTION ACTIVITY APPLICABLE TO HIGH IMPACT RESPIRATORY PATHOGEN PANDEMICS AND CONTAGIONS

Contractors are required to protect the health and safety of employees, including the prevention and mitigation of high impact respiratory pathogen pandemics and contagions. One element of Contractor compliance with these obligations is the development and implementation of a **High Impact Respiratory Pathogen Pandemic Exposure Prevention, Preparedness and Response Plan** (Plan) for all project jobsites.

The Plan must be based upon information, requirements, recommendations and guidelines from civil authorities including, but not limited to, federal or New York State Executive Orders, CDC, OSHA and New York State Department of Health surrounding health and safety measures designed to eliminate or reduce the transmission of the high impact respiratory pathogen pandemics (HIRPP). Contractor may also amend the Plan based upon and consistent with articulated operational needs and requirements.

The Plan must include the following elements:

- Responsibilities of Managers and Supervisors
- Responsibilities of Subcontractors and Suppliers to the Jobsites
- Responsibilities of Employees
- Jobsite Protective Measures
- Jobsite Visitors
- Personal Protective Equipment and Work-Related Controls
- Jobsite Cleaning and Disinfecting
- Jobsite Exposure Situation and Response Protocols
- OSHA or Other Recordkeeping Related Compliance
- Confidentiality/Privacy Protocols
- Other Safety Responsibilities & Protocols Related to HIRPP

Contractors and businesses are further required to comply with any applicable and then current COVID mandatory, emergency or temporary directives, rules or health and safety practices issued by federal, state or local authorities.

1.0 Nothing contained herein shall alter or modify the Contractor's exclusive control over the job site, subcontractors, project labor, Health & Safety Plans, Protocols, Measures, or the Contractor's exclusive control over the methods and means associated with any and all of the foregoing elements.

1.1 Cornell University possesses neither control nor any right of control over the job site, project labor, health & safety practices or programs, or methods and means of advancing the Contracted Work.

1.2 These requirements are provided to the Contractor for the attainment of Contractor's fully compliant health and safety measures and practices communicated by applicable civil authorities as requirements, rules and/or guidance necessary to engage in qualifying construction activities.

2.0 Contractors, their subcontractors and suppliers, and workers are required to adhere to applicable and imposed federal, state, and/or local measures to prevent or limit the possible exposure or spread of COVID-19, pathogens, or contagions.

2.1 To that end, Contractor shall develop a written Health & Safety Plan related to the protective measures and protocols Contractor shall employ on the Project necessary to manage and mitigate the exposure or transmission of COVID-19, pathogens, or contagions (as applicable).

2.2 This Plan shall be submitted to the Owner prior to start of Construction Activity on the Campus. Owner's receipt of the subject Plan is to affirm measures and practices are in place, not for substantive review or approval.

2.3 Health and safety practices constitute a continuing compliance obligation, Contractors and their subcontractors and suppliers must remain current with, and immediately implement updated health and safety rules, protocols and practices as they are published. The Campus may request updated elements of the Contractor's written safety plan to address evolving best practices for measures and/or practices designed to prevent or limit the spread of COVID or other pathogen.

2.4 The Contractor must notify Cornell immediately upon discovery of any employees of their firm, subcontractors, or suppliers that are, or have been working on the Cornell Campus that have been confirmed to have COVID contagion.

2.5 In addition to the foregoing, these requirements may include Contractor compliance and implementation of then applicable federal, state, or local authorities' emergency and/or temporary safety precautions and protocols surrounding COVID *i.e., Federal EO 14042 and/or applicable OSHA COVID-19 Vaccination and Testing; Emergency Temporary Standard, as applicable*.

2.6 Further, Owner reserves the right to impose additional COVID or pathogen safety protocols and requirements warranted by worksite factors, including but not limited to, proximity to Cornell students, staff and faculty; activity duration; and jobsite location *(i.e., internal spaces)*. These Owner health and safety requirements may be imposed without regard to the number of Contractor employees *i.e., less than 100 employees*.

3.0 <u>Project Closure:</u>

3.1 Where work is suspended on a project, contractors are directed to follow any additional project shut-down protocols as provided by the Owner. These protocols include but not limited to photographs, securing the work site, and a project status narrative.

4.0 Contractor expressly agrees to fully comply and remain exclusively responsible for the implementation of applicable Contractor Health and Safety Protocols and Measures. Contractor expressly agrees Contractor submission of the Plan is a condition precedent to engage in on-site construction activity.

GENERAL REQUIREMENTS

FOR

BEAMLINE ENABLING: PHASE 3

CORNELL UNIVERSITY
ITHACA, NEW YORK

NOVEMBER 17, 2023

SECTION 01 11 00 SUMMARY OF WORK

1.0 GENERAL

1.1 DESCRIPTION

A. Work to be Done

1. Install mechanical infrastructure in support future beamline
2. Install electrical infrastructure in support of future beamline
3. Install plumbing infrastructure in support of future beamline
4. Fabricate and install equipment platform
5. Install life safety sprinkler/FA extensions off existing system as required
6. Install code related items as required

B. The Scope of the Work

1. The scope of the WORK in all SECTIONS of this Specification shall consist of the furnishing of all labor, materials, equipment and appliances and the performance of the Work required by the Contract Documents and/or by the conditions at the site, joining all parts of this Work with itself and the Work of others to form a complete, functioning entity.

2. Items not specifically mentioned in the Specifications or shown on the drawings, but which are inherently necessary to make a complete working installation, shall be included.

3. It is the intent and purpose of the Contract Documents to cover and include under each item all materials, machinery, apparatus, and labor necessary to properly install materials and equipment, adjust and put into perfect operation the respective portions of the installation specified and to so interconnect the various items or sections of the work as to form a complete and operating whole. Any equipment, apparatus, machinery, material and small items not mentioned in detail, and labor not hereinafter specifically mentioned, which may be found necessary to complete or perfect any portion of the installation in a substantial manner, and in compliance with the requirements stated, implied, or intended in the Contract Documents, shall be furnished without extra cost to the Owner. The Contractor shall provide the greatest quantity, highest quality, highest degree of safety, and most stringent material, equipment or Work. Should the Drawings or the Specifications disagree in themselves or with each other, the Contractor shall provide the better quality or greater quantity of work and/or materials unless otherwise directed by written addendum to the Contract.

1.2 WORK UNDER OTHER CONTRACTS

A. The Contractor shall cooperate with other contracts performing related work, including providing labor, materials and other costs necessary to satisfactorily coordinate the Contract work with work performed under others contracts.

B. Preceding Work: Installation of Hutch 5/Cave 2 in Wilson West high bay.

C. Concurrent / Future Work:

1. Customer group will be performing fit out of equipment in Caves 4/5 and Hutch 5/Cave.

D. New York State Electric & Gas (NYSEG):

1. Contractor shall be responsible for the project management of NYSEG work including coordinating any scheduling associated with the Project.

2. The Owner shall be responsible for the cost associated with the work to be performed by NYSEG. No NYSEG costs shall be carried in the Contractor's bid.

1.3 SCHEDULE OF OWNER FURNISHED ITEMS

A. Cornell will provide the building and electrical permits for this project.

B. (2) Two CESR 85 process chilled water manifolds with valves and specialties shall be furnished by the owner for installation by the contractor. Each manifold furnished shall be pre-piped with a union, pressure gauge, and isolation valve. The supply manifold will also include a balance valve and control valve and the return manifold will also include a strainer. Refer to Detail 6 on H-200 for installation requirements.

C. The Contractor shall receive, unload, store and install Owner furnished equipment as shown on the plans and called for in the Specifications.

1. The Contractor shall be responsible for logging in, checking and verifying receipt of items and shall be responsible for confirming that the quantities and condition of the materials are appropriate for installation and the completion of the Work of the project.

2. The Contractor shall note any damage and/or short count on the Bill of Loading for any Owner Furnished Equipment received at the storage facility, such listing of damages or short count being required to establish the Owner's potential claim against the carrier. The Contractor shall also notify the Owner directly on any such damage and/or short count.

3. Unload Owner Furnished Equipment at the job site using necessary care and equipment as required to handle the equipment in a safe manner.

4. Use adequate numbers of skilled workers necessary to handle, receive and install Owner Furnished Equipment.

5. Install Owner Furnished Equipment as called for in the Drawings or in these Specifications.

D. Installation

1. Install products in conformance with manufacturer's installation instructions.

2. Provide interconnecting structures, equipment, piping, electrical and instrumentation work, finish painting, and appurtenances to achieve a complete and functional system.

E. Use of Materials

1. The Contractor shall be responsible for the use of Owner provide materials in an efficient manner in accordance with industry standards and best practices to reduce waste materials.

2.0 PRODUCTS – NOT USED

3.0 EXECUTION – NOT USED

*****END OF SECTION 01 11 00*****

SECTION 01 14 00 WORK RESTRICTIONS

1.0 GENERAL

1.1 RELATED DOCUMENTS

A. Drawings and general provisions of the Contract, including General Conditions and Division 1 Specification Sections, apply to this Section.

1.2 CONTRACTOR USE OF PREMISES

A. All traffic and pedestrian control measures shall be compliant with the **National Manual on Uniform Traffic Control Devices for Streets and Highways** (MUTCD) and **17 NYCRR Chapter V** (New York Supplement), (https://www.dot.ny.gov/mutcd) and all other local laws and regulations.

B. The Contractor shall carry on the Work in the manner which will cause the least interruption to pedestrian and vehicular traffic and permit access of emergency vehicles at all times.

C. The Work shall be scheduled and performed in such a manner that at least one lane of traffic will be maintained on all public streets. Two flag persons, equipped with radio communication devices, must be provided for any activity blocking a traffic lane. One lane of traffic must be maintained at all times. Where traffic must cross open trenches, the Contractor shall provide suitable bridges and railings; including pedestrian bridges.

D. The Contractor shall maintain 20’ minimum fire lane access to all facilities in the area.

E. The Contractor shall post and maintain flag persons and suitable signs indicating that construction operations are under way and other warning signs as may be required.

F. The Contractor shall safeguard the use by the public and Owner of all adjacent highways, roadways and footpaths, outside the Contract Limit Lines (work area), and shall conform to all laws and regulations concerning the use thereof, especially limitations on traffic and the movement of heavy equipment. Access to the site for delivery of construction materials and/or equipment shall be made only at the locations shown in the Contract Documents or approved by the Owner’s Representative.

G. The Contractor shall make every effort to keep dirt and debris from making its way to roadways. The Contractor shall immediately remove dirt and debris which may collect on permanent roadways due to the Work.

H. The Contractor shall limit the extent of its activities to that area of the site defined on the Contract Drawings as being within the Contract Limit Lines.

I. For that portion of the Work required under this Contract which must be performed in other than the defined areas both on-site and off, including operations involving delivery and removal of materials, the Contractor shall schedule and coordinate its activities through the Owner's Representative, to meet the approval of the Owner and minimize disruption of the normal scheduled activities of the occupants of adjacent spaces.

J. It is the Owner's expectation that the Contractor will take protective measures to minimize damage caused by construction activities including, but not limited to, the use of personnel lifts, material handling equipment, on-site material storage, etc. All portions of the site, including the staging area and those areas affected by the work, shall be returned to their original condition after completion of Work. Such repair work shall include lawn restoration and reseeding, if required, and shall be included in the Contractor's Guarantee of Work.

K. Routes to and from the location of the Work shall be as indicated in the Contract or as directed by the Owner's Representative. Temporary roadways shall be closed only with prior approval of the Owner's Representative.

L. Parking may be made available for staging at Palm Road or other pre-determined area for the duration of the project. The Contractor will be responsible for fencing, securing and maintaining the designated area. All vehicles at Palm Road must be registered with Transportation Services. Due to ongoing work at the Palm Road lot, parking may be limited.

1.3 UNIVERSITY CLOSURES

A. In the event of University closure, the Contractor should use their judgement, follow their internal guidance on continuity of operations, and the direction of law enforcement, as to whether or not they will maintain operations on construction sites on campus. They should make this decision with the awareness that Cornell response to any project needs (shutdowns, emergencies) will not possible and the maintenance of roads and walks will not be to normal operating standards.

B. With your safety as a top priority, the Cornell University Police allows you the ability to take advantage of our Emergency Mass Notification System that enables your cellphone to become a personal safety device for you. Contractor's wishing to participate may text the following: CornellAlert to **67283** and you will be set up to receive alert messages. Be advised that you may stop receiving messages at any time by sending "stop" to CornellAlert. There will also be a system generated "stop" every year on August 1st at which point you will need to send the text CornellAlert to re-enlist.

1.4 WATER USE RESTRICTION

A. The Contractor shall adhere to any University issued Water Use Restrictions in place at the time of construction.

1.5 PARKING

A. The Owner may designate an area for parking of essential Contractor vehicles on the project site.

B. The Contractor shall make all arrangements, and bear the cost, for transportation of all trade persons from the designated parking area to the construction site as necessary.

C. It should be noted that there is a fee for all parking on the Cornell University campus. The Contractor is responsible for the payment for all parking costs imposed by the Owner. The Contractor should contact the Project Manager (Alex Chevallard) for additional information. The Contractor will be required to complete a "New Construction Employee Form" for each permit requested. This form may be found at http://finance.fs.cornell.edu/contracts/forms/contractors.cfm.

D. Contractor shall cooperate with Transportation Services and/or other authorities having jurisdiction, as follows:

1. Ensure parking by all employees of the Contractor, subcontractors, material suppliers, and others connected with this project only within construction fence or the designated parking area.

2. Prohibit employees from parking in any other areas, roads, streets, grounds, etc.

3. Discharge any employee refusing to comply with these requirements.

4. Ensure proper transportation of personnel between the designated parking area and the construction site.

E. The Contractor shall remove from the parking area and staging area all temporary trailers, rubbish, unused materials, and other materials belonging to the Contractor or used under the Contractor's direction during construction or impairing the use or appearance of the property and shall restore such areas affected by the work to their original condition, and, in the event of its failure to do so, the same shall be removed by the Owner at the expense of the Contractor, and the Contractor shall be liable therefore.

1.6 CHANGEOVERS AND CONTINUITY OF SERVICES

A. Make all changeovers, tie-ins and removals, etc., of any part of the Work that would affect the continuity of operation of the adjacent services at approved times that will not interfere with the Owner's operations. Secure approval of Owner before proceeding.

B. Make all necessary temporary connections required to permit operation of the building services and/or equipment. Remove the connections after need has ceased.

C. The Contractor may be permitted to make changeovers during normal working hours at the Owner's discretion. Should the Contractor perform this Work outside of normal working hours, no extra payment will be made for resulting overtime expenses.

D. When connecting new facilities do not shut off any existing Mechanical/Electrical facilities or services without prior written approval of Owner's Representative.

E. The Contractor shall not, except in an emergency condition, shutdown any utility without the express permission of the Owner's Representative. Major, affecting life safety or outside contract limit lines, shutdowns of utilities will be performed by Cornell University to enable Contractor to perform required work. Major shutdowns shall be defined as those affecting life safety or which are outside the project site limits.

F. Maintain domestic water and firewater in service at all times. No service may be out for more than twenty-four (24) hours. Maintain firewater flow capability (hose, if necessary) to all buildings and coordinate with Cornell Utilities, Cornell Environmental Health and Safety (EH&S), and City of Ithaca Fire Department.

G. All shutdowns to be scheduled a minimum of seven (7) calendar days in advance and requests shall be submitted via ePM system to the Owner's Representative.

H. IN THE EVENT OF AN EMERGENCY WHERE THE OWNER'S REPRESENTATIVE IS NOT AVAILABLE, THE CONTRACTOR SHALL DIAL 911 IMMEDIATELY.

1.7 OBSTACLES, INTERFERENCE AND COORDINATION

A. General

1. Plans show general design arrangement. Install work substantially as indicated and verify exact location and elevations; DO NOT SCALE PLANS.

2. Due to small scale of Drawings, it is not possible to indicate all offsets, fittings, changes in elevations, interferences, etc. Make necessary changes in the Work, equipment locations, etc., after notification to the Owner's Representative and Architect. Obtain approval from same, as part of Contract, to accommodate work to obstacles and interferences encountered.

3. Obtain written approval for all major changes before installing. If requested, submit drawings, detailing all such deviations or changes.

4. Exposed to view mechanical units, ductwork, conduit, pipes or other building equipment are essential parts of the artistic effect of the building design and shall be installed in locations as shown on the drawings. Conformance to given dimensions and alignments with the structural system, walls, openings, indicated centerlines are a requirement of the Contract and the Contractor shall familiarize himself with the critical nature of proper placement of these items. The Contractor shall notify the Architect of conflicts which would cause such equipment to be installed in locations other than as indicated on the Drawings. The Contractor shall not proceed with the installation of exposed to view mechanical units, ductwork, conduit, pipes, etc. until all conflicts have been identified by the Contractor and resolutions to conflicts approved by the Architect.

B. Interference

1. Install work so that all items are operable and serviceable and avoid interfering with removal of rails, filters, belt guards and/or operation of doors, etc. Provide easy and safe access to valves, controllers, motor starters and other equipment requiring frequent attention.

1.8 EQUIPMENT ARRANGEMENTS

A. Since all equipment of equal capacity is not necessarily of same arrangement, size of construction, these Plans are prepared on basis of one manufacturer as "basis-of-design equipment", even though other manufacturers' names are mentioned.

B. If Contractor elects to use specified equipment other than "design equipment" which differs in arrangement, size, etc., the Contractor does so subject to following conditions:

1. Submit detailed drawings indicating proposed installations of equipment and showing maintenance and service space required.

2. If revised arrangement meets approval, make all required changes in the work of all trades, including but not limited to louvers, panels, structural supports, pads, etc. at no increase in Contract. Provide larger motors and any additional control devices, valves, fittings and other miscellaneous equipment required for proper operation of revised layout, and assumes responsibility for proper location of roughing in and connections by other trades.

3. If revised arrangement does not meet approval because of increase in pressure loss, possibility of increase in noise, lack of space or headroom, insufficient clearance for removal of parts, or for any other reason, provide equipment which conforms to Contract Drawings and Specifications.

1.9 EXISTING EQUIPMENT, MATERIALS, FIXTURES, ETC.

A. Where existing equipment, piping, fittings, etc. are to be removed, Contractor shall submit complete list to Owner. All items that Owner wishes to retain shall be carefully removed and salvaged and delivered to building storage where directed by Owner. Items that Owner does not wish to retain shall be removed from the site and legally disposed.

1.10 EXAMINATION OF PREMISES, DRAWINGS, ETC.

A. Before Submitting Proposal

1. Examine all Drawings and Specifications relating to Work of all trades to determine scope and relation to other work.

2. Examine all existing conditions affecting compliance with Plans and Specifications, by visiting site and/or building.

3. Ascertain access to site, available storage and delivery facilities.

B. Before Commencing Work on Any Phase or in any Area

1. Verify all governing dimensions at site and/or building.

2. Inspect all adjacent work.

3. All work is to be conducted in such a manner as to cause a minimum degree of interference with the Campus' operation and programmatic schedule. Prior to the commencement of each phase, submit Shutdown / Demo action plans that clearly describe the steps required to safely shut down utilities, systems and infrastructure that are within the work area (or effecting the work area); and those outside the work area and within approximately 25 feet of the work area limits, as approved by the Owner. The Shutdown / Demo action plan shall identify the shut off point(s) for each utility, system and infrastructure as well as the secondary shut off point(s) to account if the primary points fail or are otherwise inaccessible. To identify shutoff points, trace each utility, system and infrastructure in the presence of the campus representative from the work area to the shutoff points and place clear label on same indicating what the shutoff point is and what it effects and whether it is the primary or secondary shut off. The Shutdown / Demo action plan shall describe the shutdown procedure, identify tools and material required for shutdown, sequence of activities required for proper shutdown, the name of the person(s) or trade(s) deemed competent to perform each activity in the shutdown sequence and names and telephone numbers of the campus staff required to provide access to shut off points, assist in the shut off or perform portions of the shutdown activities. Additionally, the plan will address the Contractor's plan for maintaining MEP to adjacent occupied areas, inclusive of planned tie-in points for any and all necessary, temporary infrastructure, alarming, monitoring etc. Submit the Shutdown / Demo action plan for review and approval at least two weeks prior to field work in the work area. Field work shall not begin until the Shutdown / Demo action plan is reviewed. Contractor is to assign and include a competent crew, knowledgeable of each unique system involved (i.e. Mechanic, Electrician, Sheet metal, Plumber, Controls, IT, etc.). Field investigation is to include any and all necessary ladders, scaffold, temp lighting, cutting tools, photos, labels, PPE, etc. needed to properly locate, access and label shut off points. The University is explicitly requesting heightened awareness and an earnest mitigation of impact. This requirement supplements all other contractual obligations, and requires the dedication of *no less than* an aggregate 40 hours.

C. Tender of Proposal Confirms Agreement

1. All items and conditions referred to herein and/or indicated on accompanying Drawings.

2. No consideration, additional monies or time extensions will be granted for alleged misunderstanding.

D. Existing or Archived Drawings

1. Existing or Archived drawings of impacted buildings are appended in electronic format only for reference and informational purposes. These historic drawings are not to be considered contract drawings and are provided "FOR INFORMATION ONLY". The Owner makes no representation as to the accuracy of the drawings as representing current conditions.

1.11 STAND DOWN DATES

The scope of this project is entirely interior work and is not subject to any known stand down dates or campus events.

1.12 WORKING HOURS

A. Normal work hours are 6AM-dusk Monday-Saturday except during above noted restrictions. This means that Contractor shall not permit any noise generating activities that could disturb campus occupants or residents to take place outside of these hours. Should any conditions necessitate work to extend beyond these hours – Contractor may submit a detailed request with reasonable advance notice to Cornell. Cornell (at its sole discretion) may issue a written relaxation of the above but Contractor is advised never to assume that it will be granted.

B. During Construction periods, no work shall take place prior to 9AM in a Residence Hall, Fraternity, Co-Op, Sorority, or any type of Housing Unit. Residence Halls require 72 hours notification to the Student & Academic Services representative prior to entering a Residence Hall or Student Room. This does not apply to Fraternity, Co-Op or Sorority House which require 24 hours notification to the Facilities Manager.

2.0 PRODUCTS – NOT USED

3.0 EXECUTION – NOT USED

*****END OF SECTION 01 14 00*****

SECTION 01 25 00 SUBSTITUTIONS AND PRODUCT OPTIONS

1.0 GENERAL

1.1 DESCRIPTION

A. The Contractor shall furnish and install the products specified, under the options and conditions for substitutions stated in this Section.

1.2 DEFINITIONS

A. Substitutions: Changes in products, materials, equipment, and methods of construction from those required by the Contract Documents and proposed by Contractor.

1. Substitutions for Cause: Changes proposed by Contractor that are required due to changed Project conditions that are beyond the Contractor's control, such as unavailability of product, or regulatory changes.

   a. Products that are not available from Contractor's preferred suppliers does not constitute unavailability of product.

2. Substitutions for Convenience: Changes proposed by Contractor or Owner that are not required in order to meet other Project requirements but may offer advantage to Contractor or Owner.

B. Products: Items obtained for incorporating into the Work, whether purchased for Project or taken from previously purchased stock. The term "product" includes the terms "material," "equipment," "system," and terms of similar intent.

1. Named Products: Items identified by manufacturer's product name, including make or model number or other designation shown or listed in manufacturer's published product literature that is current as of date of the Contract Documents.

2. New Products: Items that have not previously been incorporated into another project or facility. Items salvaged from other projects are not considered new products. Items that are manufactured or fabricated to include recycled content materials are considered new products, unless indicated otherwise.

3. Comparable Product: Product that is demonstrated and approved through submittal process to have the indicated qualities related to type, function, dimension, in-service performance, physical properties, appearance, and other characteristics that equal or exceed those of specified product.

C. Basis-of-Design Product Specification: A specification in which a specific manufacturer's product is named and accompanied by the words "basis-of-design product," including make or model number or other designation, to establish the significant qualities related to type, function, dimension, in-service performance, physical properties, appearance, and other characteristics for purposes of evaluating comparable products of additional manufacturers named in the specification.

1.3 ACTION SUBMITTALS

A. Substitution Requests: Submit indicated number of copies of each Substitution Request Form, attached hereto, for consideration. Identify product or fabrication or installation method to be replaced. Include Specification Section number and title and Drawing numbers and titles.

1. In addition to submission of Substitution Request Form, substitutions shall be listed on the Bid Proposal Submission Form with description, specification references, and corresponding change in base bid

1.4 PRODUCTS LIST

A. Within thirty (30) days after the award of Contract, submit to the Architect five copies of a complete list of products which are proposed for installation.

B. Tabulate the products by listing under each specification section title and number.

C. For products specified only by reference standards, list for each such product:

1. Name and address of the manufacturer.

2. Trade name.

3. Model or catalog designation.

4. Manufacturer's data:

a. Reference standards.

b. Performance test data.

1.5 QUALITY ASSURANCE

A. Compatibility of Substitutions: Investigate and document compatibility of proposed substitution with related products and materials. Engage a qualified testing agency to perform compatibility tests recommended by manufacturers.

B. Compatibility of Options: If Contractor is given option of selecting between two or more products for use on Project, select product compatible with products previously selected, even if previously selected products were also options.

1. Contractor is responsible for providing products and construction methods compatible with other products and construction methods.

2. If a dispute or compatibility issue arises over concurrently selectable but incompatible products, Architect will determine which products shall be used.

1.6 PROCEDURES

A. Coordination: Modify or adjust affected work as necessary to integrate work of accepted substitutions and approved comparable products.

1.7 EQUIVALENTS – APPROVED EQUAL

A. Equivalents or Approvals - General

1. The words "similar and equal to", or "or equal", "equivalent" and such other words of similar content and meaning shall for the purposes of this Contract be deemed to mean similar or equivalent to one of the named products. For the purposes of Paragraph A and B of this Section 1.4 and for the purposes of Bidding Documents, the word "products" shall be deemed to include the words "articles", "materials", "items", "equipment" and "methods". Whenever in the Contract documents one or more products are specified, the words "similar and equal to" shall be deemed inserted.

2. Whenever any product is specified in the Contract documents by a reference to the name, trade name, make or catalog number of any manufacturer or supplier, the intent is not to limit competition, but to establish a standard of quality which the Architect has determined is necessary for the Project. The Contractor may at its option use any product other than that specified in the Contract Documents provided the same is approved by the Architect in accordance with the procedures set forth in Paragraph B of this Section 1.4. In all cases the Architect shall be the sole judge as to whether a proposed product is to be approved and the Contractor shall have the burden of proving, at its own cost and expense, to the satisfaction of the Architect, that the proposed product is similar and equal to the named product. In making such determination the Architect may establish such objective and appearance criteria as it may deem proper that the proposed product must meet in order for it to be approved.

3. Nothing in the Contract Documents shall be construed as representing, expressly or implied, that the named product is available or that there is or there is not a product similar and equal to any of the named products and the Contractor shall have and make no claim by reason of the availability or lack of availability of the named product or of a product similar and equal to any named product.

4. The Contractor shall have and make no claim for an extension of time or for damages by reason of the time taken by the Architect or by reason of the failure of the Architect to approve a product proposed by the Contractor.

5. Request for approval of proposed equivalents will be received by the Architect only from the Contractor.

B. Equivalents or Approvals After Bidding

1. Request for approval of proposed equivalents will be considered by the Architect after bidding only in the following cases: (a) the named product cannot be obtained by the Contractor because of strikes, lockouts, bankruptcies or discontinuance of manufacturer and the Contractor makes a written request to the Architect for consideration of the proposed equivalent within ten (10) calendar days of the date it ascertains it cannot obtain the named product; or (b) the proposed equivalent is superior, in the opinion of the Architect, to the named product; or (c) the proposed equivalent, in the opinion of the Architect, is equal to the named product and its use is to the advantage of the Owner, e.g., the Owner receives an equitable credit, acceptable to it, as a result of the estimated cost savings to the Contractor from the use of the proposed equivalent or the Owner determines that the Contractor has not failed to act diligently in placing the necessary purchase orders and a savings in the time required for the completion of the construction of the Project should result from the use of the proposed equivalent; or (d) the proposed equivalent, in the opinion of the Architect, is equal to the named product and less than ninety (90) calendar days have elapsed since the Notice of Award of the Contract.

2. Where the Architect pursuant to the provisions of this Section 1.4 approves a product proposed by the Contractor and such proposed product requires a revision or redesign of any part of the work covered by this Contract, all such revision and redesign and all new Drawings and details required therefore shall be subject to approval of the Architect and shall be provided by the Contractor at its own cost and expense.

3. Where the Architect pursuant to the provisions of this Section approves a product proposed by the Contractor and such proposed product requires a different quantity and/or arrangement of duct work, piping, wiring, conduit or any other part of the work from that specified, detailed or indicated in the Contract Documents, the contractor shall provide the same at its own cost and expense.

1.8 CONTRACTOR'S OPTIONS

A. For products specified only by reference standard, select any product meeting that standard, by any manufacturer.

B. For products specified by naming several products or manufacturers, select any one of products and manufacturers named.

1. Products:

a. Restricted List (Products): Where Specifications include paragraphs or subparagraphs titled “Products” or that include the phrase “provide one of the following”, and include a list of names of both manufacturers and products, provide one of the products listed that complies with requirements. Comparable products for Contractor's convenience will not be considered.

- Substitutions may be considered, unless otherwise indicated.

b. Non-restricted List (Available Products): Where Specifications include paragraphs or subparagraphs titled “Available Products” or that include the phrase “include, but are not limited to, the following”, and include a list of names of both available manufacturers and products, provide one of the products listed, or an unnamed product, that complies with requirements. Comply with requirements in "Comparable Products" Article for consideration of an unnamed product.

2. Manufacturers:

a. Restricted List (Manufacturers): Where Specifications include paragraphs or subparagraphs titled “Manufacturers” or that include the phrase “provide products by one of the following”, and include a list of manufacturers' names, provide a product by one of the manufacturers listed that complies with requirements. Comparable products for Contractor's convenience will not be considered.

- Substitutions may be considered, unless otherwise indicated.

b. Non-restricted List (Available Manufacturers): Where Specifications include paragraphs or subparagraphs titled “Available Manufacturers” or that include the phrase “include, but are not limited to, the following”, and include a list of available manufacturers, provide a product by one of the manufacturers listed, or a product by an unnamed manufacturer, that complies with requirements. Comply with requirements in "Comparable Products" Article for consideration of an unnamed manufacturer's product.

3. Basis-of-Design Product: Where Specifications name a product, or refer to a product indicated on Drawings, and include a list of manufacturers, provide the specified or indicated product or a comparable product by one of the other named manufacturers. Drawings and Specifications indicate sizes, profiles, dimensions, and other characteristics that are based on the product named.

a. Restricted List (List of Manufacturers): Where Specifications include paragraphs or subparagraphs titled “Basis-of-Design Product”, and include a list of other manufacturers' names, provide the specified or indicated product or a comparable product by one of the other named manufacturers that complies with requirements.

- Comply with requirements in "Comparable Products" Article for consideration of an unnamed product by one of the other named manufacturers.

- Substitutions may be considered, unless otherwise indicated.

b. Non-restricted List (No List of Manufacturers): Where Specifications include paragraphs or subparagraphs titled “Basis-of-Design Product”, and do not include a list of other manufacturers’ names, provide the specified or indicated product or a comparable product by another manufacturer that complies with requirements. Comply with requirements in "Comparable Products" Article for consideration of an unnamed manufacturer's product.

C. For products specified by naming one or more products or manufacturers and stating "or equal", the Contractor shall submit a request as for substitutions, for any product or manufacturer not specifically named. Such substitution shall have been listed on Bid Proposal Submission Form as required in Instructions to Bidders. If not so listed, no substitution will be allowed.

D. For products specified by naming only one product and manufacturer, no option and no substitution will be considered unless listed on the Bid Proposal Submission Form as provided in the Instructions to Bidders. Base Bid must include the specified product or manufacturer. Substitutions will be at the sole discretion of the Owner.

1.9 SUBSTITUTIONS

A. Substitutions for Cause: Submit requests for substitution immediately on discovery of need for change, but not later than 21 days prior to time required for preparation and review of related submittals.

B. Substitutions for Convenience: Submit requests for substitution within thirty (30) days of contract award.

C. Submit a separate request for each substitution. Support each request with:

1. Completed "Request for Substitution" form in eBuilder. A request for substitution of a product, material, or process for that specified in the Contract Documents must be formally submitted as such accompanied by evidence that the proposed substitution ⟨1⟩ is equal in quality and serviceability to the specified item; ⟨2⟩ will not entail changes in detail and construction of Other Work; ⟨3⟩ will be acceptable to the Architect and Owner's Design Consultant's in achieving design and artistic intent; and ⟨4⟩ will not result in a cost and/or schedule disadvantage.

2. Complete data substantiating compliance of the proposed substitution with requirements stated in Contract Documents:

   a. Product identification, including manufacturer's name and address.

   b. Manufacturer's literature; identify:

      - Product description.

      - Reference standards.

      - Performance and test data.

   c. Samples, as applicable.

   d. Name and address of similar projects on which product has been used, and the date of each installation.

3. An itemized comparison of the proposed substitution with the product specified listing any variations.

4. Data relating to any changes in the construction schedule.

5. The effect of the substitution on each separate contract of the Project.

6. List any changes required in other work or projects.

7. Designate any required license fees or royalties.

8. Designate availability of maintenance services, and source of replacement materials.

D. Substitutions shall not result in additions to the Contract Sum.

E. Substitutions will not be considered as having been accepted when:

1. They are indicated or implied on shop drawings or product data submittals without a formal request from the Contractor.

2. They are requested by a subcontractor or supplier.

3. The acceptance will require substantial revision of Contract Documents.

F. Substitute products shall not be ordered or installed without written acceptance of the Owner.

G. The Owner and the Architect shall be the sole judges of the acceptability of a proposed substitution.

1.10 COMPARABLE PRODUCTS

A. Conditions for Consideration: Contractor's request for approval of comparable product will be considered when the following conditions are satisfied. If the following conditions are not satisfied, Architect may reject or return requests without action, except to record noncompliance with these requirements. Where products or manufacturers are specified by name, submit the following, in addition to other required submittals, to obtain approval of an unnamed product or manufacturer:

1. Evidence that the proposed product does not require revisions to the Contract Documents that it is consistent with the Contract Documents and will produce the indicated results, and that it is compatible with other portions of the Work.

2. Detailed comparison of significant qualities of proposed product with those named in the Specifications. Significant qualities include attributes such as performance, weight, size, durability, visual effect, sustainable design characteristics, warranties, and specific features and requirements indicated. Indicate deviations, if any, from the product specified.

3. Evidence that proposed product provides specified warranty.

4. List of similar installations for completed projects with project names and addresses and names and addresses of architects and owners, if requested.

5. Samples, if requested.

1.11 CONTRACTOR'S REPRESENTATION

A. In making a formal request for a substitution the Contractor represents that:

1. By submitting Shop Drawings, Product Data, Samples and similar submittals, the Contractor thereby represents that he has determined and verified all dimensions, quantities, field dimensions, relations to existing work, coordination with work to be installed later, coordination with information on previous Shop Drawings, Product Data, or Samples and compliance with all the requirements of the Contract Documents. The accuracy of all such information is the responsibility of the Contractor.

2. The Contractor has personally investigated the proposed product and has determined that it is equal to or superior in all respects to that specified.

3. The Contractor will provide the same warranties or bonds for the substitution as for the product specified.

4. The Contractor will coordinate the installation of an accepted substitution into the Work, and will make such changes as may be required for the Work to be complete in all respects.

5. The Contractor waives all claims for additional costs related to the substitution which may subsequently become apparent.

1.12 ARCHITECT'S DUTIES

A. Review Contractor's requests for substitutions with reasonable promptness.

B. Transmit evaluations and recommendations to the Owner, so that the Owner can notify the Contractor of the decision for acceptance or rejection of the request for substitution.

2.0 PRODUCTS – NOT USED

3.0 EXECUTION – NOT USED

*****END OF SECTION 01 25 00*****

SECTION 01 31 19 PROJECT MEETINGS

1.0 GENERAL

1.1 DESCRIPTION

A. The Owner will schedule and administer pre-construction meeting, periodic progress meetings, and specially called meetings throughout the progress of the work.

1. Prepare agenda for meetings.
2. Distribute written notice of each meeting four days in advance of meeting date.
3. Make physical arrangements for meetings.
4. Preside at meetings.
5. Record the minutes; include all significant proceedings and decisions.
6. Duplicate and distribute copies of minutes after each meeting.
   a. To all participants in the meeting.
   b. To all parties affected by decisions made at the meeting.
   c. To the Architect.

B. Representatives of Contractor, subcontractors and suppliers attending the meetings shall be qualified and authorized to act on behalf of the entity each represents.

1.2 PRE-CONSTRUCTION MEETING

A. Schedule at least fifteen (15) days after date of Notice to Proceed.

B. Location: A central site, convenient for all parties.

C. Attendance:

1. Owner's Representative(s)
2. Contractor(s)
3. Architect and its professional consultants
4. Major Subcontractors
5. Major suppliers
6. Safety Representatives for the Owner and Contractor

D. Minimum Agendum:

1. Distribution and discussion of:

   a. List of major subcontractors and suppliers

   b. Projected Construction Schedules

2. Critical work sequencing

   a. Identification of major shutdowns and approximate schedule

3. Major equipment deliveries and priorities

4. Project Coordination

   a. Designation of responsible personnel

5. Procedures and processing of:

   a. Field decisions

   b. Proposal requests

   c. Submittals

   d. Change Orders

   e. Applications for Payment

   f. Requests for Information

   g. Daily Reports

6. Adequacy of distribution of Contract Documents

7. Procedures for maintaining Record Documents

8. Use of premises:

   a. Office, work and storage areas

   b. Owner's requirements

   c. Job site personnel conduct

   d. Building access and security

9. Temporary facilities, controls and construction aids

10. Temporary utilities

11. Safety and first-aid procedures

a. Contractor's Project Site Specific Plan

12. Security procedures

13. Housekeeping procedures

14. Affirmative Action Plan and Reporting requirements

1.3 PROGRESS MEETINGS

A. Schedule regular periodic meetings on the site, not less than once every two weeks throughout the Construction period.

B. Attendance:

1. Architect

2. Architect's professional consultants when, in the opinion of the Owner, needed

3. General Contractor, including Site Superintendent

4. Owner's Representatives

5. Subcontractors as appropriate to the agenda

6. Suppliers as appropriate to the agenda

7. Safety Representative

C. Minimum Agenda:

1. Review, approval of minutes of previous meeting

2. Review percentage of work to be in place by next meeting by individual trades

3. Review of work progress since previous meeting

4. Field observations, problems, and conflicts

5. Problems which impede Construction Schedule

6. Review of off-site fabrication, delivery schedules

7. Corrective measures and procedures to regain projected schedule

8. Revisions to Construction Schedule

9. Planned progress and schedule, during succeeding work period

10. Coordination of schedules

11. Review submittal schedules; expedite as required

12. Maintenance of quality standards

13. Review status of all issued proposal requests and change orders

14. Review proposed changes for:

    a. Effect on Construction Schedule and on completion date

    b. Effect on other contracts of the Project

15. Other business

D. All decisions, instructions, and interpretations given by the Architect/Engineer or its representative at these meetings shall be binding and conclusive on the Contractor.

1.4 PRE-INSTALLATION CONFERENCE(S)

A. The Contractor to hold pre-installation conferences where required by individual specification sections or others at the discretion of the Owner. Minimum attendees would be Architect and/or their specific sub-consultant, Owner, Contractor, Subcontractor, key Suppliers, testing & inspection firm, Facilities Engineering subject matter expert, etc. Minimum agenda would include review of key submittals, RFI's, safety, logistics, material procurement, quality control, etc. Contractor to assemble and distribute the Agenda minimum 48 hours prior to meeting as well as distribute meeting minutes a minimum of seven (7) calendar days after the meeting.

B. Submit a list of pre-installation meetings with preliminary dates within fifteen (15) days of issuance of the Notice to Proceed.

2.0 PRODUCTS – NOT USED

3.0 EXECUTION – NOT USED

******END OF SECTION 01 31 19*****

SECTION 01 31 50 ELECTRONIC PROJECT MANAGEMENT

1.0 GENERAL

1.1 SUMMARY

A. Owner Provided System: The Contractor will utilize the Owner's electronic Project Management (e-PM) system eBuilder on this project.

1. The Owner shall manage the day to day use of the Owner provided ePM system and organize the training, support and maintenance of the ePM Website System for the entire project team for the period of its use on the Project.

B. There are no fees to utilize this system.

1.2 RELATED SECTIONS

A. General Conditions Article 9 – Coordination and Cooperation.

B. Section 01 33 00 – Submittal Procedures

1.3 DEFINITIONS

A. ePM: defined as an internet-based information and project communication system that allows the entire project team to collaborate in a centralized and secured repository. All project-specific correspondence, workflow processes, and documentation will be stored and routed within the ePM system.

1.4 PROCEDURES

A. Users will be provided a username and password. The Contractor shall log into the system to enter the Project Documentation listed in section 2.0. project. documentation All correspondence documentation should be communicated through the system.

B. Training

1. The Owner will provide training to familiarize team members with the system, and all Contractor staff are expected to attend one of these sessions or otherwise receive proper training on the system's use. All cost for personnel time and travel to attend the training as needed shall be included in the Contractor's proposal.

C. The Contractor shall provide on-site personnel with personal computer(s) and personal computer equipment that will allow the Contractor's personnel to access and use the ePM system in a timely and efficient manner. At a minimum the Contractor is to provide the following equipment and software:

1. Web Browser: with high-speed connection, up/downloading capability

2. Color printer and plotter capable of full-size document production

3. Scanner: capable of scanning a high volume of project documents clearly and quickly

4. Digital Camera: (1) single lens reflex (SLR) type camera

5. Portable Document Format (PDF) Reader/writer software

D. Contractor shall log on to the ePM system on a daily basis, and as necessary to be kept fully appraised of the project developments, correspondence, assigned tasks and other matters that occur on the site. These may include but are not limited to RFI's, action items, meeting minutes, discussion threads, schedule updates, submittals, submittal log, punch list items, daily reports, site photos and/or videos and pre-construction surveys.

1.5 PROCESS OVERVIEW

A. The Contractor is required to timely and accurately post, review, respond, and collaborate with other team members using the following features and/or workflow processes within the ePM system.

B. Project Team Directory – Contractor shall provide an updated directory of contact information for all companies, subcontractors and project team members who are engaged on this project.

C. Request for Information (RFI): All project RFI's will be submitted using the ePM system. The submission of a Request for Information (RFI) is the Contractor's exclusive means of requesting information from the Owner and/or Architect. Attachments to RFI's (which may include sketches, photographs, documentation, and the like, will be uploaded to the ePM system and attached to the RFI electronically.

D. Meeting Minutes: Contractor shall enter meeting agendas, records and minutes in the system for all applicable meetings as designated by the Owner.

E. General Communications, memorandums and Letters (Project Correspondence): Shall be created in or posted to the ePM system in PDF format electronically linked to action items. These action items shall include names of party (ies) required to respond, time frame within which action is to be taken and any solutions the Contractor recommends.

F. Drawings and Specifications: The Contract Documents will be posted to the ePM system as directed by the Owner. The Owner shall retain the right to assign download rights to active CAD or model files. CAD or model files, in any format, posted to the ePM system are for viewing and printing only and cannot be edited.

G. Submittals: All submittals shall be fully electronic. Reference Section 01 33 00.

H. Submittal Register and Contractor shall review and update on a daily basis and shall close all approved items.

I. Field Reporting: The Contractor shall post and/or update on a daily basis all reports required by other specification sections. These reports include, but are not limited to, daily construction reports, material location reports, unusual event reports, safety and accident reports.

J. Project Photographs: Contractor shall upload project photographs to the ePM system, field by date and type including but not limited to:

1. General Progress Photographs

2. RFI Issues

3. Non-Conforming Work

4. Special Events

5. As required by individual Specification Sections

K. Project Schedule: The contractor shall post, distribute, review, and/or respond to the project schedule, monthly updates, and any other schedule submittals onto the ePM in both native and PDF formats.

L. Permits & Approvals: Contractor shall upload and maintain current copies of all permits and agency approvals that relate to the project.

M. Issue Tracking: Contractor to log and respond to issues that are related and affect other stakeholders within the project team.

N. Quality Assurance: The Owner and/or Architect will issue reports on conforming items in the ePM system. The Contractor is required to review and respond with corrective actions in the system.

O. Change Management – Cost Events and Change Orders will be managed by the ePM system and the Contractor shall be responsible for reporting potential changes and logging Requests for Change Orders in the system. The Contractor shall also upload and manage all documentation supporting Requested Change Orders.

P. Pay Applications Requests (Invoices) – The Contractor shall create and submit invoices for review by the Owner. Once the invoices are agreed to by the Owner then the invoices should be submitted electronically per the instructions for the ePM system.

Q. Budget and Cost Management – Contractor to provide estimates and work breakdown structure (WBS) to provide Owner with accurate budget/cost analysis.

1.6 ADDITIONAL INFORMATION

A. The Owner may change the standards for distribution and process prescribed above as required to suit the project.

B. The Owner shall retain ownership of all data entered into either system and shall administrate and distribute all information contained therein.

C. The Contractor shall make certain that all subcontractors performing significant work on the project shall actively participate in the ePM system. Requirements for participation in the ePM system shall be made part of each bid document and final contract.

2.0 PRODUCTS – NOT USED

3.0 EXECUTION – NOT USED

******END OF SECTION 01 31 50*****

SECTION 01 32 16 CONSTRUCTION SCHEDULE

1.0 GENERAL

1.1 SUMMARY

A. The Contractor shall, within fourteen (14) calendar days of Notice to Proceed, prepare and submit to the Owner estimated construction progress schedules for the entire Work, with sub-schedules of related activities which are essential to the progress of the Work.

B. Conferences will be held with the Architect, Owner and Contractor at the start of the project to agree mutually on a progress schedule which must be diligently followed.

C. Submit revised progress schedules periodically and when requested to do so by Owner.

D. Submit to Owner and Architect a cash flow projection in accordance with Schedule of Values.

E. Submit electronic versions of all schedules, including updates, as well as all back-up to the submitted schedules.

1.2 FORM OF SCHEDULES

A. Prepare Network Analysis system, or prepare schedules in the form of a horizontal bar chart.

1. Provide separate horizontal bar for each trade or operation.

2. Horizontal time scale: Identify the first work day of each week.

3. Scale and spacing: To allow space for notations and future revisions.

B. Format of listings: The chronological order of the start of each item of work.

C. Identification of listings: By specification section numbers.

1.3 CONTENT OF SCHEDULES

A. Construction Progress Schedule:

1. Show the complete sequence of construction by activity.

2. Show the dates for the beginning, and completion of, each major element of construction. Specifically, list:

a. Site clearing

b. Site utilities

c. Foundation work

d. Structural framing

e. Subcontractor work

f. Equipment installations

g. Finishes

h. Pre-Installation meetings

3. Show projected percentages of completion for each item, as of the first day of each month.

4. Show estimated dates for the beginning and completion of work which must be completed by or coordinated with the Owner such as hazardous materials abatement, moving, training and other such items as they are identified.

B. Submittals Schedule for Shop Drawings, Product Data and Samples: Confer with the Architect and agree on all elements of the Submittals Schedule. The schedule will be based on the understanding that minimum turn-around time in the Architect's office is ten (10) working days. Some submittals or groups of submittals may take longer to review. Submittals which do not conform to the agreed schedule may be subject to delays in processing. Show:

1. The dates for Contractor's submittals.

2. The dates reviewed submittals will be required from the Architect.

3. Confirmed lead time for manufacturing, production, fabrication and shipment to the project site of all materials which have an impact on the critical path of the Project's construction schedule.

1.4 PROGRESS REVISIONS

A. Indicate progress of each activity to date of submission.

B. Show changes occurring since previous submission of schedule:

1. Major changes in scope

2. Activities modified since previous submission

3. Revised projections of progress and completion

4. Other identifiable changes

C. Provide a narrative report as needed to define:

1. Problem areas, anticipated delays, and the impact on the schedule.

2. Corrective action recommended, and its effect.

3. The effect of changes on schedules of other prime contractors.

1.5 SUBMISSIONS

A. Submit initial Construction Progress Schedules within fifteen (15) calendar days after award of Contract.

1. Owner will review schedules and return review copy within ten (10) days after receipt.

2. If required, resubmit within seven (7) days after return of review copy.

B. Submit progress revision schedules to accompany each application for payment.

C. Submit Submittals Schedule within thirty (30) calendar days after date of commencement of work.

D. Submit one reproducible transparency and one opaque reproduction.

2.0 PRODUCTS - NOT USED

3.0 EXECUTION

3.1 DISTRIBUTION

A. Distribute copies of the reviewed schedules to:

1. Owner Job Site personnel

2. Subcontractors

3. Other concerned parties

B. Instruct recipients to report to the Contractor, in writing, any problems anticipated by the projections of the schedule.

*****END OF SECTION 01 32 16*****

SECTION 01 32 33 PHOTOGRAPHIC DOCUMENTATION

1.0 GENERAL

1.1 DESCRIPTION

A. The Contractor shall provide existing condition photographs taken before commencement of Work, progress photographs taken periodically during progress of the Work, and final photographs upon completion and full occupancy of the building.

1.2 SUBMITTALS

A. Progress Submittals

1. Key Plan: Submit key plan of Project area and building with notation of vantage points marked for location and direction of each photograph.

2. Submit digital photograph electronic files, organizationally filed by week, to E-Builder within five (5) days of taking photographs.

3. Each photograph shall be identified with project title, date, and a description of the view.

2.0 PRODUCTS – NOT USED

3.0 EXECUTION

3.1 EXISTING CONDITION PHOTOGRAPHS

A. Before commencement of selective demolition, take photographs of Project area and surrounding areas, including existing items to remain during construction.

3.2 PROGRESS PHOTOGRAPHS

A. Photographs shall be taken weekly in a manner which completely documents the work.

B. The photographs shall be submitted to the Owner at the end of the first week for review.

C. Provide photographs of any wall, ceiling or floor assembly containing MEP, A/V or any infrastructure that will thereafter become concealed-prior to closure. Note location on Key Plan.

3.3 FINAL COMPLETION PHOTOGRAPHS

A. Photographs shall be taken in a manner which completely documents the completed work, for submission as project record documents.

*****END OF SECTION 01 32 33*****

SECTION 01 33 00 SUBMITTAL PROCEDURES

1.0 GENERAL

1.1 DESCRIPTION

A. Section includes administrative and procedural requirements for submittals, including the following:

1. Shop Drawings
2. Product Data
3. Samples
4. Quality Assurance and Quality Control Submittals
5. Coordination Drawings
6. Certification of Asbestos free products
7. Owner audio/visual
8. Owner furnishings and fixed equipment

B. Designate in the construction schedule, and/or in a separate Submittals Schedule, the dates for submission and the dates reviewed Shop Drawings, Product Data and Samples will be needed.

C. With the exception of physical samples and color charts, or as otherwise approved by the Owner, all submittals shall be electronic images in PDF format created electronically (saved with commenting allowed) which shall be submitted for review and approval via the electronic project management web site. PDFs shall be created directly from the native file format electronically. Scanning of paper to PDF shall be used minimally. Any non-electronic submittals shall be approved on a case by case basis and logged into the electronic management system as directed by a Cornell representative.

1.2 SUBMITTAL REGISTRY AND SCHEDULE

A. The Architect shall provide a draft submittal registry in the template needed for eBuilder importation. It will be part of the contract documents and turned over to the Contractor in native format for their use. The Contractor shall be responsible for review and completion of the registry including addition of dates identified below and other information as deemed necessary by the Owner.

B. The submittal registry and schedule shall list all submittals required by the specifications, listed in order by the specification section in which they are required. Coordinate the Submittal Schedule with the Contractor's Critical Path Method Construction Schedule and other related documents.

C. The Submittal Registry shall include the following information:

1. Title (*by Architect for Contractor review*)

2. Related specification section and paragraph numbers (*by Architect for Contractor review*)

3. Subsection (*by Architect for Contractor review*)

4. Category of Submittal (Certification, Mock-Up, Operations/Maintenance Manual, Product Data, Sample, Shop Drawing, Test Report, As Built, etc.) (*by Architect for Contractor review*)

5. Submittal Description including description of the part of the Work covered by the submittal (*by Architect for Contractor review*)

6. Name of Subcontractor, if applicable (*Contractor provided, optional*)

7. Date due from Subcontractor (*Contractor provided, optional*)

8. Date due to be submitted for review (*Contractor provided, **required***)

9. Date due for submittal review to be completed (*Contractor provided, **required***)

10. Date for transmittal to Subcontractor (*Contractor provided, optional*)

11. Date for material or product delivery to project (*Contractor provided, **required***)

12. Priority. Low, normal or high (*Contractor provided, **required***)

D. Schedule a resubmittal for each major submittal. Except where specified otherwise in the contract documents, provide review times for submittals in accordance with Submittal Procedures and Architect's Duties below.

E. Distribution: Initially submit the Submittal Schedule to the Owner for review via the electronic Project Management system. A submittal schedule compliant with the requirements of this section showing all submittals for the preliminary schedule submission duration shall be submitted with the Contractor's preliminary schedule submittal described in Section 01 32 16. The schedule shall also enumerate all submittals to be processed after the initial preliminary schedule submission duration period, although the date for these submittals does not have to be indicated. A final baseline submittal schedule showing all submittals for the entire project shall be included in the baseline schedule submittal described in Section 01 32 16.

F. Updating: The Submittal Schedule shall be kept up-to-date by the Contractor until all submittals are approved. Failure to provide the requested information, or delay in submitting required submittals may result in the payment request being returned to the Contractor until the required schedule or submittals are received.

1.3 SHOP DRAWINGS

A. Drawings shall be newly prepared information drawn accurately to scale by skilled draftsperson and presented in a clear and thorough manner.

1. Highlight, encircle, or otherwise indicate deviations from Contract Documents.

2. Do not reproduce Contract Documents or copy standard information as basis of Shop Drawings.

3. Standard information prepared without specific reference to Project is not Shop Drawing.

B. Shop Drawings include fabrication and installation Drawings, setting diagrams, schedules, patterns, templates and similar Drawings. Include the following information:

1. Dimensions.

2. Identification of products and materials included by sheet and detail number.

3. Compliance with specified standards.

4. Notation of coordination requirements.

5. Notation of dimensions established by field measurements.

6. Submittal:

a. For electronic transmittal, submittals shall be distributed electronically via the electronic project management system and will be reviewed and returned electronically marked with action taken.

b. Maintain returned document as a “Record Document”.

1.4 PRODUCT DATA

A. Product Data includes brochures, diagrams, standard schedules, performance charts, and instructions that illustrate physical size, appearance and other characteristics of materials and equipment. All submittals shall identify all products as being asbestos free, see Section 01 35 29.

B. Collect Product Data into a single submittal for each element of construction or system.

1. Clearly mark each copy to show applicable choices and options. Failure to do so will result in rejection of the submission.

2. Show performance characteristics and capacities.

3. Show dimensions and clearances required.

4. Show wiring or piping diagrams and controls.

5. Where Product Data includes information on products that are not required, eliminate or mark through information that does not apply.

6. Supplement standard information to provide information specifically applicable to the Work.

7. Preliminary Submittal: Submit single copy of Product Data where selection of options by Architect is required.

8. Submittals:

a. For electronic transmittal, submittals shall be distributed electronically via the electronic project management system and will be reviewed and returned electronically marked with action taken.

b. Maintain one (1) copy as a "Record Document".

1.5 SAMPLES

A. Samples include partial sections of manufactured or fabricated components, cuts or containers of materials, color range sets, and swatches showing color, texture, and pattern.

B. Office samples shall be of sufficient size and quantity to clearly illustrate:

1. Functional characteristics of the product, with integrally related parts and attachment devices.

2. Full range of color, texture and pattern.

C. Field samples and mock-ups:

1. Contractor shall erect, at the Project site, at a location acceptable to the Architect.

2. Size or area: that specified in the respective specification section.

3. Fabricate each sample and mock-up complete and finished.

4. Remove mock-ups when directed by the Architect.

5. Perform necessary work to bring any area disturbed by mock-ups to the areas original condition.

D. Submit fully fabricated Samples cured and finished as specified and physically identical with material or product proposed.

1. Mount or display Samples in manner to facilitate review of qualities indicated.

2. Identify Samples with generic description, product name, and name of manufacturer.

3. Submit Samples for review and verification of size, kind, color, pattern, and texture.

4. Where variation in color, pattern, texture, or similar characteristics is inherent in material or product represented, submit at least three (3) multiple units that show approximate limits of variations.

5. Preliminary Submittals: Submit one (1) full set of choices where Samples are submitted for Architect's selection of color, pattern, texture, or similar characteristics from a range of standard choices.

6. Submittals:

a. Submit four (4) sets for Architect's review. Architect will return at least one (1) set marked with action taken. Maintain sets of Samples, as returned, at Project Site, for quality comparisons throughout course of construction. Additionally, for electronic transmittal, photograph sample and its label and attached to the submittal item electronically via the electronic project management.

1.6 QUALITY ASSURANCE AND QUALITY CONTROL SUBMITTALS

A. Quality assurance and quality control submittals include design data, test reports, certifications, manufacturer's instructions, and manufacturer's field reports.

B. Professional design services or certifications: Where Contract Documents require professional design services or certifications by a design professional, Contractor shall cause such services or certifications to be provided by a qualified design professional, whose registration seal shall appear on drawings, calculations, specifications, certifications, Shop Drawings, and other submittals prepared by such professional. Architect shall be entitled to rely upon adequacy, accuracy, and completeness of services, certifications, or approvals performed by such design professionals.

C. Inspection and Test Reports: Requirements for submittal of inspection and test reports from independent testing agencies as specified in the Contract Documents.

D. Manufacturer's instruction: Preprinted instructions concerning proper application or installation of system or product.

E. Manufacturer's field reports: Reports documenting testing and verification by manufacturer's field representative to verify compliance with manufacturer's standards or instructions.

F. Submittals:

1. For electronic transmittal, submittals shall be distributed electronically via the electronic project management system and will be reviewed and returned electronically marked with action taken.

2. Maintain one (1) additional copy as “Record Document”.

1.7 COORDINATION DRAWINGS

A. The Contractor shall coordinate and manage the preparation and submittal of coordinated layouts of the mechanical, electrical and fire protection systems and equipment for all areas; drawn at a scale not less than 1/4" per foot showing on both plan and elevation including but not limited to all equipment, ducts, pipe sleeves, piping including plumbing and, sprinkler system, lighting, special supports and other items contained within the space. Show mechanical and electrical services as well as architectural and structural features drawn to scale. Provide electronic record of each coordination drawing submitted in TIFF and PDF formats to the Owner. Provide coordination drawings for all corridors, laboratories, offices, mechanical rooms, boiler room, shafts, tunnels, and all congested areas. Copies of coordination drawings shall be distributed to all trades to assure a complete, coordinated installation of work within the space available.

B. Submittal and review of coordination drawings will be required thirty (30) days prior to commencement of fabrication and/or installation of any work item.

C. Prepare and submit coordinated layouts of the mechanical and electrical systems and equipment for all areas; drawn at a scale not less than 3/8 inch =1 foot (1:32) showing on both plan and elevation including but not limited to all equipment, ducts, pipe sleeves, piping including plumbing and, sprinkler system, lighting, special supports and other items contained within the space. Show mechanical and electrical services as well as architectural and structural features drawn to scale. Provide copies of each coordination drawing submitted. Provide coordination drawings for all spaces, including but not limited to, corridors, laboratories, offices, mechanical rooms, boiler room, shafts, tunnels, and other areas. Copies of coordination drawings shall be distributed to all trades to assure a complete, coordinated installation of work within the space available.

1. Show architectural, structural and other adjacent work requiring coordination with services. Show items, including but not limited to, access doors, ceiling grids, ceiling construction, structural decks and framing, fixtures, devices, and other adjacent work coordinated with services and architectural layouts shown on Drawings.

2. Prepare plans, sections, elevations, and details as needed to describe relationship of various systems and components. Supplement plan drawings with section drawings where required to adequately represent the Work.

3. Include room names and numbers of each space.

4. Coordinate the addition of trade-specific information to the coordination drawings by multiple entities in a sequence that best provides for coordination of the information and resolution of conflicts between installed components before submitting for review.

5. Contract drawings are diagrammatic. Exact location of receptacles, light fixtures, exit signs, fire alarm devices, and other devices shall be coordinated with the Architectural Drawings and shall not be scaled from locations indicated on the Mechanical and Electrical Drawings. Coordinate modifications in layout as necessary to complete the Work in accordance with the design intent.

6. Coordinate modifications in layout and components necessary to ensure maintenance accessibility and prevent conflict between each portion of the Work.

7. Maintain maximum headroom at all locations. Unless indicated otherwise, all mechanical and electrical systems and associated components are to be installed as tight to underside of structure as possible.

8. Indicate functional and spatial relationships of components of architectural, structural, mechanical, plumbing, fire protection, electrical systems, communications systems, security systems, and other portions of the Work. Drawings shall indicate dimensions, to avoid interference with existing conditions, structural frame, ceilings, partitions, services, and other portions of the Work. Where conflicts occur with placement of materials of various portions of the Work, Contractor shall be responsible to resolve conflicts and coordinate the available space to accommodate each portion of the Work. Adjustments resulting from coordination shall be initialed and dated by the entity(s) affected by the adjustments.

9. Indicate space requirements for routine maintenance and for anticipated replacement of components during the life of the installation.

10. Show location and size of access doors and access panels required for access to concealed dampers, valves, and other controls.

11. Indicate required installation sequences.

12. Indicate dimensions, elevations, and alignments shown on the Drawings. Specifically note dimensions, elevations, and alignments that appear to be in conflict with submitted equipment and minimum clearance requirements and notify Architect. Provide alternate sketches to Architect indicating proposed resolution of such conflicts. Minor dimension changes and difficult installations will not be considered changes to the Contract.

13. Indicate suspended ceiling heights and show locations of visible ceiling-mounted devices relative to acoustical ceiling grid.

14. Indicate locations of fire-rated partitions, smoke partitions, and other required barriers.

15. Plenum Space: Indicate sub-framing for support of ceiling and wall systems, mechanical and electrical equipment, toilet partitions, overhead-mounted equipment, and related Work. Locate components within ceiling plenum to accommodate layout of light fixtures indicated on Drawings. Indicate areas of conflict between light fixtures and other components and notify Architect.

16. Exposed Ceiling Construction: In addition to other indicated information, show fully-dimensioned locations of all items exposed at ceiling space. Indicate alignment requirements and centerline locations of light fixtures, ducts, piping, conduit, and other services. Show dashed outline locations of laboratory casework, shelving, and other items that extend 7 feet or more above the floor.

17. Mechanical and Electrical Rooms: Provide coordination drawings for mechanical and electrical rooms showing plans and elevations of mechanical, plumbing, fire-protection, fire-alarm, and electrical equipment. Indicate paths of egress from rooms. Indicate paths for equipment removal from rooms. Indicate clear areas required for access and maintenance.

18. Structural Penetrations: Indicate scheduled and requested penetrations and openings required for all disciplines. Request un-scheduled penetrations and openings where Contractor has reviewed, analyzed, and coordinated all possible routing options and structural penetrations are only feasible option to accommodate indicated ceiling heights. Refer to the drawings for general guidelines and request confirmation by Architect for structural penetrations.

19. Mechanical and Plumbing Work: Show dimensioned locations, sizes and bottom elevations of ductwork, piping, and conduit runs, including insulation, bracing, flanges, accessories, and support systems. Show locations of major components, such as dampers, valves, diffusers, access doors, cleanouts and electrical distribution equipment.

20. Electrical Work: Show electrical distribution, systems, equipment, and runs of vertical and horizontal conduit 1-1/4 inches (32 mm) in diameter and larger. Show light fixture, exit light, emergency battery pack, smoke detector, fire alarm, and other device locations. Show panel board, switch board, switchgear, transformer, bus way, generator, and motor control center locations. Show location of pull boxes and junction boxes, dimensioned from column center lines. Show lighting control systems. Show cable tray layouts including vertical and horizontal offsets and transitions, clearances for access above and to side of cable trays, and vertical elevation of cable trays above the floor or bottom of ceiling structure.

21. Fire Suppression System: Show locations of standpipes, mains piping, branch lines, pipe drops, and sprinkler heads.

22. Refer to individual Sections for additional Coordination Drawing requirements for Work in those Sections.

23. Contractor Sign-Off: Contractor and each entity performing portions of the Work shall sign and date coordination drawings.

24. Review: Architect will review coordination drawings to confirm that the Work is being coordinated, but not for the details of the coordination, which are Contractor's responsibility. If Architect determines that coordination drawings are not being prepared in sufficient scope or detail, or are otherwise deficient, Architect will so inform Contractor, who shall make changes as directed and resubmit. Review of coordination drawings shall not reduce Contractor's responsibility for final coordination of installation and maintenance clearances of systems and equipment with existing conditions and each portion of the Work.

D. Submittal and review of coordination drawings will be required before work can start in any given area of the building.

1.8 CONTRACTOR RESPONSIBILITIES

A. Review submittals for compliance with Contract Documents and approve submittals prior to transmitting to the Architect.

B. Specifically record deviations from Contract Document requirements, including minor variations and limitation. Comply with requirements of Section 01 25 00 Substitutions and Product Options.

C. Contractor's approval of submittals shall indicate that the Contractor has determined and verified materials, field measurements and field construction criteria, and has checked and coordinated information within each submittal with requirement of the Work and Contact Documents. Field conflicts which arise from the contractor's failure to fully review and approve submittals before ordering equipment, will result in the contractor being burdened with all costs to remediate the situation.

D. Contractor shall be responsible for:

1. Compliance with the Contract Documents

2. Confirming and correlating quantities and dimensions

3. Selecting fabrication processes and techniques of construction.

4. Coordination of the work represented by each submittal with other trades.

5. Performing the work in a safe and satisfactory manner.

6. Compliance with the approved Construction Schedule.

7. All other provisions of the agreements.

E. It is understood that the Architect's notation on the submittals is not to be construed as an authorization for additional work or additional cost.

F. If any notations represent a change to the Contract Sum, submit a cost proposal for the change in accordance with procedures specified before proceeding with the work.

G. It is understood that the Architect's notation on the submittal is not to be construed as approval of colors. Make all color-related submittals at one time.

H. Notify the Architect by letter of any notations made by the Architect which the Contractor finds unacceptable. Resolve such issues prior to proceeding with the Work.

I. Begin no fabrication of work until all specified submittal procedures have been fulfilled.

J. Do not submit shop drawings, product data or samples representing work for which such submittals are not specified. The Architect shall not be responsible for consequences of inadvertent review of unspecified submittals.

K. The review of shop drawings shall not relieve the Contractor of the responsibility for proper construction and the furnishing of materials and labor required even though the same may not be indicated on the review shop drawings.

L. Certify that only asbestos free material is used in the execution of all work. Reference Section 01 35 39.

1.9 SUBMITTAL PROCEDURES

A. Coordination

1. Coordinate submittals with performance of construction activities in accordance with the Submittal Schedule approved by the Architect and Owner.

2. Coordinate each submittal with fabrication, purchasing, testing, delivery, other submittals and related activities that require sequential activity.

3. Prepare and transmit each submittal in accordance with the Submittals Schedule, agreed to by all entities involved.

4. Prepare, review, approve and transmit each submittal sufficiently in advance of performance of related construction activities to avoid delay.

5. Architect's Review: Allow ten (10) working days for Architect's initial processing of each submittal requiring the Architect’s review and response, except for longer periods required as noted below, and where processing must be delayed for coordination with subsequent submittals. The Architect will advise the Contractor promptly when it is determined that a submittal being processed must be delayed for coordination. Allow ten (10) working days for Architect's reprocessing of each submittal. Notify the Architect when processing time for a submittal is critical to the progress of the work, and the work would be expedited if its processing time could be shortened.

   An additional five (5) working days will be required for items specified in Divisions 2, 3, 5, 23 and 26, and for Architectural Woodwork, Hollow Metal Work and Hardware Schedules.

6. Allow time for delivery in addition to review.

7. Allow time for reprocessing each submittal.

8. No extension of Contract Time will be authorized because of failure to prepare submittals sufficiently in advance of Work to permit processing.

9. Submittals made which do not conform to the schedule are subject to delays in processing by the Architect.

10. Refer to Section 01 32 16 Construction Schedules for requirements of the Submittals Schedule.

11. Failure of the Contractor to obtain approval of Shop Drawings shall render all work thereafter performed to be at Contractor's sole risk, cost and expense.

B. Submittal Preparation

1. Place permanent label or title block on each submittal for identification.

2. Indicate name of entity that prepared each submittal on label or title block.

3. Provide space on label or beside title block on Shop Drawings to record Contractor's stamp, initialed or signed, certifying to review of submittal, action taken, verification of products, field measurements and field construction criteria, and coordination of the information within the submittal with requirements of the Work and of Contract Documents.

4. Complete all fields on submittal item details in ePM system including meaningful description.

5. Include the following information on submittal documentation:

a. Drawing, detail or specification references, including section number, as appropriate to clearly identify intended use of product.

b. Field dimensions, clearly identified as such.

c. Relation to adjacent or critical features of the work or materials.

d. Applicable standards, such as ASTM or Federal Specification numbers.

e. Provide a blank space for the Architect's stamps

f. On transmittal, record relevant information including deviations from Contract Document requirements, including minor variations and limitations.

6. Identification of revisions on re-submittals, other than those noted by the Architect on previous submittals.

7. Shop drawings with the comment "by others" are not acceptable. All such work must specifically identify the related responsible subcontractor.

C. Submittal Transmittal:

1. Transmit submittals via the electronic project management system to Architect unless otherwise noted or directed.

2. Prepare and generate transmittal in ePM system for submission of samples. Package sample and other each submittal appropriately for transmittal and handling.

1.10 RECORD SUBMITTALS

A. Provide a record copy of the submittal in electronic format. Record copy shall be a clean copy (free of notes from the design professional) which has been updated to reflect the "as-installed" system. Provide document in PDF format.

B. Provide a record copy of the submittal (electronic format) for the O&M Manual.

1.11 RESUBMISSION REQUIREMENTS

A. Make any corrections or changes noted on previous submittals.

B. Shop Drawings and Product Data:

1. Revise initial drawings or data, and resubmit as specified for the initial submittal.

2. Indicate any changes which have been made other than those noted by the Architect.

C. Samples: Submit new samples as required for initial submittal.

1.12 ARCHITECT'S DUTIES

A. Review submittals with reasonable promptness as identified in 1.8, paragraph 5 of this Section.

B. Notations on the Submittal Review Stamp or eBuilder file mean the following:

1. "Approved (APP)" indicates that no deviations from the design concept have been found and Work may proceed.

2. "Approved as Noted (AAN)" indicates that deviations from the design concept which have been found are noted, and the Contractor may proceed accordingly.

3. "Revise and Resubmit (RAR)" indicates that Work covered by submittal, including purchasing, fabrication, delivery, or other activity may not proceed. Revise or prepare new submittal according to Architect's notations; resubmit without delay. Repeat if necessary to obtain different action mark.

4. "Rejected (REJ)" indicates that Work covered by submittal, including purchasing, fabrication, delivery, or other activity may not proceed. Revise or prepare new submittal according to Architect's notations; resubmit without delay. Repeat if necessary to obtain different action mark.

5. "On Hold (ONH)" is used in a very limited capacity and means that the Contractor should not take action until the reason for hold has been cleared and may be required to revise and resubmit.

6. "Not Reviewed (NRV)" is used for submittals that were submitted in error, duplicate, or other reason that does not require review by the Architect but need to be closed by the Contractor upon return to them.

7. "For Record Only (FRO)": Submittals for information or record purposes, including Quality Assurance and Quality Control Submittals, and Material Safety Data Sheets (MSDS), will not require responsive action by the Architect.

   a. Architect will forward informational submittals without action.

   b. Architect will reject and return informational submittals not in compliance with Contract Documents.

C. Incomplete Submittals: Architect will return incomplete submittals without action.

D. Unsolicited Submittals: Architect will return unsolicited submittals to sender without action.

E. Return submittals to Contractor for distribution, or for resubmission.

1.13 DISTRIBUTION

A. Distribute reviewed Shop Drawings and copies of Product Data when possible via the electronic project management system to:

   1. Job site file

   2. Record Documents file

   3. Subcontractors

   4. Installers

   5. Suppliers

   6. Manufacturers

   7. Fabricators

   8. Architect

   9. Owner

B. Do not permit use of unmarked copies or rejected copies of submittals in connection with construction at Project Site or elsewhere where Work is in progress.

2.0 PRODUCTS – NOT USED

3.0 EXECUTION – NOT USED

END OF SECTION 01 33 00

SECTION 01 35 29 GENERAL HEALTH & SAFETY

1.0 GENERAL

1.1 DESCRIPTION

A. This Section provides requirements for general health and safety during the project. The requirements of this Section shall apply to both Contractor and all tiers of sub-contractors involved in the project.

1. General Emergency Information – It is recommended that both Contractor and all sub-tiers:

   a. Sign up for Cornell Emergency Alerts. The instructions can be found at (use the visitors section): https://emergency.cornell.edu/alert/

   b. Signup for Tompkins County Emergency alerts at: https://www2.tompkinscountyny.gov/doer/swift911alerts

   c. Cornell EHS has brief guidance on some emergency scenarios at: https://emergency.cornell.edu/eag/

B. In addition to the requirements of this Section, all laws and regulations by applicable local, state, and federal agencies shall apply to the work of this contract. In some cases, the requirements of these Specifications may by intention exceed such legal requirements, but in no case shall this Specification be interpreted or understood to reduce or eliminate such requirements.

1.2 CONTRACTOR'S PROJECT SITE SPECIFIC PLAN

A. Contractors are required to submit a Project Site Specific Plan (PSSP) for review by Cornell University representatives before commencement of work on the site. The PSSP should address site specific information, controls and or requirements as it relates to the entire scope of work for the project. All contractors shall use the Project Site Specific Plan Template below to develop their Project's PSSP. The template may be downloaded at:

https://ehs.cornell.edu/campus-health-safety/occupational-safety/contractor-safety

1. Within the PSSP Template are example(s) to use as reference. The provided examples demonstrate Cornell University's expectations for providing detailed site specific information, controls and requirements.

2. Project Site Specific Plan's that inadequately address site specific operations will be returned with comments for resubmission. Failure to submit a PSSP may result in delay of project and/or denial of the payment.

3. All projects must have the PSSP submitted via e-Builder for review and comment.

B. PSSP submittal should be submitted a minimum of ten (10) days prior to the commencement of work on site. The Contractor may opt to submit their PSSP in phases. The Contractor must submit a phase submission plan using the PSSP Submission table included in the PSSP template for approval by Owner's Representative with initial submission. Submit remaining phases no later than ten (10) days prior to the start of a new, predetermined project phase or milestone.

1. Projects having less than a ten (10) day turn-around shall coordinate their submittal with the Owner's Representative, who should coordinate with Occupational Health, Safety and Injury Prevention (OHSIP), the University Fire Marshall's Office and Contract College's Codes Enforcement Official, if applicable.

C. The Contractor is responsible for its employees and its subcontractors. Subcontractors are required to submit their PSSP to the General Contractor. The General Contractor is responsible to ensure all subcontractor(s) PSSP's are adequate per their scope of work.

D. The General Contractor is required to ensure their project's PSSP is accurately maintained throughout the duration of the contract. Resubmission is required for any new scope elements not previously addressed by the Contractor's original PSSP.

E. Definitions:

1. Project Site Specific Plan (PSSP): A structured document that details the scope of the contract work and related site specific controls, requirements and information for University and Contractor personnel. This document is not intended to be all inclusive of all applicable local, state and federal laws and regulations for which the General Contractor and its Subcontractor(s) are expected to comply.

2. Authority Having Jurisdiction (AHJ):

- The organization, office or individual responsible for approving equipment, an installation or a procedure (NYS Fire Code).

- The local government, county government or state agency responsible for the administration and enforcement of an applicable regulation or law (NYS Building Code-§202.2).

3. Occupational Health, Safety and Injury Prevention (OHSIP): A division of Cornell University's Environmental Safety and Health Department. The OHSIP division can be contacted at (607)-255-8200 or by email at askEHS@cornell.edu

4. SME: The University's subject matter expert.

1.3 AERIAL WORK PLATFORMS

A. The preferred method for Aerial Work Platforms (AWPs) boom storage is fully retracted and fully lowered to the ground.

B. In some circumstances booms may need to be stored in the air because of vandalism concerns, minimal size of storage location, etc.

1. If this is case, the area under the elevated boom must be blocked or arranged such that prevents people from walking, standing, working or parking vehicles underneath.

2. When booms are stored in the air consult the extended weather forecast. Booms should not be stored in the air during predicted high winds, or severe storms. AWPs become unstable at winds or gusts greater than 25 mph and must be fully lowered to prevent a tip-over.

1.4 ASBESTOS

A. All products provided for use in construction at Cornell University are to be free of asbestos. At Substantial Completion, prior to beneficial service, the Contractor shall provide a signed certification form "Exhibit AC" stating that all Contractor supplied & installed products are 100% asbestos free. The Contractor has to attach applicable Safety Data Sheets/ Material Safety Data Sheets for each product documenting a 100% asbestos free status. The University may provide random testing of products for asbestos content. Any Contractor installed product found to contain asbestos shall be classified as defective work. Defective work shall be corrected by the Contractor as specified in the General Conditions.

B. Attached for the Contractor's information are asbestos reports which represent samples taken within the building.

C. Based on the above, disposal of asbestos containing material is not anticipated.

1.5 LEAD

A. Building may contain lead based paint. The Contractor shall protect workers in accordance with OSHA regulations. The Contractor selects the means and/or methods to address the presence of lead based paint, and must concurrently protect its workers based on the Contractor's means and/or methods. The Contractor is required to submit a lead plan that is site specific, indicating that the protective measures the Contractor proposes meet the OSHA standard 1926.62 "Lead in Construction Standards". This site specific plan should address the particular methods the Contractor intends to protect its workers, the building occupants and the building structure based on its selection of addressing the presence of lead based paint.

1.7 SITE VISITS

A. The undertaking of periodic Site Visits by Architects, Engineers or the Owner shall not be construed as supervision of actual construction, or make them responsible for the safety of any persons; or make them responsible for means, methods, techniques, sequences or procedures of construction selected by the Contractor or its Subcontractors; or make them responsible for safety programs and precautions incident to the Work, or for the safe access, visit, use, Work, travel or occupancy of any person.

1.8 CONFINED SPACE

A. The Contractor shall be responsible for the identification of confined space in accordance with OSHA requirements.

2.0 PRODUCTS – NOT USED

3.0 EXECUTION – NOT USED

*****END OF SECTION 01 35 29*****

Cornell University

Distribution to:

OWNER ☐
ARCHITECT ☐
CONTRACTOR ☐
FIELD ☐
OTHER ☐

CONTRACTOR'S CERTIFICATION OF ASBESTOS FREE MATERIALS
(Exhibit AC)

PROJECT:

CONTRACT NUMBER:

CONTRACT FOR:

CONTRACT DATE:

DATE OF ISSUANCE:

TO OWNER: *(Name & Address)*
CORNELL UNIVERSITY
Facilities Contracts
121 Humphreys Service Building
Ithaca, New York 14853

The undersigned hereby certifies that all materials and equipment furnished for or installed in connection with all work, labor, and services provided with respect to the performance of the Contract referenced above shall be free of asbestos and any asbestos containing material. The undersigned shall provide any and all documents supporting such certification which may reasonably be required the Owner, including where applicable Safety Data Sheets and/or Material Safety Data Sheets.

SUPPORTING DOCUMENTS ATTACHED HERETO:

- Material Safety Data Sheets

CONTRACTOR:
(Name & Address)

BY: _____
(Signature of authorized representative)

NAME: _____
(Printed name)

TITLE: _____

State of: _____)
)SS.
County of: _____)

Subscribed and sworn to before me this

_____ Day of _____ 20_____

_____

DELTA
ENGINEERS, ARCHITECTS, & SURVEYORS

860 Hooper Road
Endwell, NY 13760
Tel: 607.231.6600
Fax: 607.231.6650
www.delta-eas.com

November 16, 2023

Mr. Steven Fernaays
AIA, LEED Green Associate, Principal, Professional Practice Manager
SWBR Architects, P.C.
387 East Main Street, Suite 500
Rochester, New York 14604-2107

Re: Cornell University Wilson Lab (Bldg. 2085) Beamline Enabling Project Phase 3
Asbestos Inspection Report
SWRB Project No. 21198.00
Delta Project No.: 2016.159.009

Dear Mr. Fernaays:

The following information is associated with the upcoming Cornell University Wilson Lab Beamline Enabling Project Phase 3. Based on a review of the Project 90% CD Drawings dated November 3, 2023 provided by SWBR, and a review of existing sample information for the affected areas / associated suspect materials, no asbestos bulk sampling was performed as a part of this Inspection.

The various wall and ceiling systems with the potential to be impacted include:

- Non-suspect concrete & metal
- Non-Asbestos sheetrock / joint compound & parging on concrete (all previously sampled and reported as being "Non-Asbestos").

All pipe insulation with the potential to be impacted is non-suspect fiberglass with non-asbestos wrapping / covering (previously sampled and reported as being "Non-Asbestos") and non-suspect foam. All accessible wire wrap was observed to be non-suspect vinyl.

Based on the above, no asbestos containing materials are anticipated to be impacted as a part of the Wilson Lab Beamline Enabling Project Phase 3.

If you have any questions, or require any other information, please feel free to contact me at your convenience.

Respectfully,
DELTA ENGINEERS, ARCHITECTS, & SURVEYORS

Stephen Prislupsky
Director of Environmental Services

SECTION 01 35 43 GENERAL ENVIRONMENTAL REQUIREMENTS

1.0 GENERAL

1.1 DESCRIPTION

A. This Section and the listed Related Sections provides minimum requirements for the protection of the environment during the project. The requirements of this Section shall apply to both Contractor and all tiers of sub-contractors involved in the project.

B. In addition to the requirements of this Section and the listed Related Sections, all laws and regulations by applicable local, state, and federal agencies shall apply to the work of this contract. In some cases the requirements of these Specifications may by intention exceed such legal requirements, but in no case shall this Specification be interpreted or understood to reduce or eliminate such requirements.

C. Prior to bidding, review the entire Bidding Documents and report in writing to the Owner's Representative any error, inconsistency, or omission that may have environmental impacts.

1.2 RELATED SECTIONS

A. Section 01 35 44 – Spill Control

B. Section 01 35 45 – Refrigerant Compliance

1.3 SUBMITTALS

A. Submit the following in accordance with Section 01 33 00 – Submittals:

1. Analytical laboratory sample results and material Certifications for all imported soil and granular materials ("borrow").

2. Contractor's Waste Material Disposal Plan.

3. Weight tickets from the Borrow Material Supplier.

4. Proposed methods for dewatering and construction water management.

5. Analytical laboratory sample results for all waste materials.

6. Copies of manifests for all waste materials disposed of off-site.

1.4 JOB SITE ADMINISTRATION

A. In accordance with Article 2 of the General Conditions, provide a competent supervisory representative with full authority to act for the Contractor at the site.

B. If at any time operations under the representative's supervision do not comply with this Section, or the representative is otherwise unsatisfactory to the Owner, replace, if requested by the Owner, said representative with another representative satisfactory to the Owner. There shall be no change in superintendent without the Owner's approval.

C. Remove from the Work any employee of the Contractor or any Subcontractor when so directed by the Owner. The Owner may request the removal of any employee who does not comply with these specifications.

1.5 CLEARING, SITE PREPARATION AND SITE USE

A. In accordance with Section 01 14 00, only that portion of the working area that is absolutely necessary and essential for the work shall be cleared for construction. All clearing should be approved and performed to provide minimum practical exposure of soils.

B. The Contractor shall make every effort to avoid the destruction of plants, trees, shrubs and lawns outside the area of construction so as not to unduly disturb the ecological or environmental quality of the area.

C. Topsoil excavated as part of the Project, which can be reused as part of the Project, shall be stockpiled for future use and temporarily stabilized to prevent erosion.

1.6 SPOIL AND BORROW

A. Spoil

1. Dispose of excavated material which, in the opinion of the Owner's Representative, is unfit to be used as backfill or embankment or which is in excess of the amount required under the Contract.

2. All spoil areas shall be graded and seeded to match the surrounding area.

3. Spoil areas shall be covered and protected from erosion into adjacent storm sewers, drainage ways, land areas, or water bodies.

B. Borrow Material

1. Borrow material shall be provided from a clean source. Submittals of proposed borrow material shall be reviewed by the Owner prior to delivery on-site. Submittals shall include the quantity of materials, source location and certification by the material supplier that it is free of chemicals or other foreign matter.

1.7 NOISE AND VIBRATION

A. Limit and control the nature and extent of activities at all times to minimize the effects of noise and vibrations. Take adequate measures for keeping noise levels, as produced by construction related equipment, to safe and tolerable limits as set forth by the Occupational Safety and Health Administration (OSHA), the New York State Industrial Code Guidelines and Ordinances and all City, Town and Local ordinances. Equip all construction equipment presenting a potential noise nuisance with noise-muffling devices adequate to meet these requirements

1.8 DUST CONTROL

A. Take adequate measures for controlling dust produced by drilling, excavation, backfilling, loading, saw cutting or other means. The use of calcium chloride or petroleum-based materials for dust control is prohibited. Dust control measures are required throughout the duration of construction.

B. If, in the opinion of the Owner's Representative, the Contractor is not adequately controlling dust, the Owner will first notify the Contractor. If the Contractor does not take adequate actions necessary, the Owner may, at the Contractor's expense, employ alternative means to control dust.

C. Erect, maintain, and remove when appropriate barriers or other devices, including mechanical ventilation systems, as required by the conditions of the work for the protection of users of the project area, the protection of the work being done, or the containment of dust and debris. All such barriers or devices shall be provided in conformance with all applicable codes, laws, and regulations including OSHA.

1.9 PROTECTION OF THE ENVIRONMENT

A. Construction procedures observed by the Contractor, its subcontractors and other employees shall include protection of the environment, in accordance with all pertinent Cornell standards, policies, local laws, executive orders, ordinances, and federal and state regulations. Construction procedures that are prohibited in the undertaking of work associated with this Contract include, but are not limited to:

1. Dumping of spoil material or any liquid or solid pollutant into any storm or sanitary sewer, drainage way, stream sewer, any wetlands (as defined by federal and state regulations), any surface waters, or at unspecified locations.

2. Indiscriminate, arbitrary, or capricious operation of equipment in any stream corridors, any wetlands, or any surface waters.

3. Pumping of any silt-laden water from trenches or other excavations into any storm sewers, sanitary sewers, drainage ways, wetlands, or surface waters.

4. Damaging vegetation beyond the extent necessary for construction of the facilities.

5. Disposal of trees, brush, and other debris in any location on University property, unless such areas are specifically identified on the drawing or in the specifications or specifically approved by the Owner's site representative.

6. Permanent or unspecified alteration of the flow line of a stream.

7. Burning trash, project debris, or waste materials.

B. Take all necessary precautions to prevent silt or waste of any kind from entering any drainage or waterways or downstream properties as a result of the Work.

C. Runoff of potable water used for concrete curing or concrete truck or chute cleaning operations shall not be allowed to reach the storm water system or open water due to the levels of residual chlorine (New York State water quality standards, 6 NYCRR Part 703.5) and other potential contaminants. If necessary, obtain permission from the local sewer authority and collect and pump the runoff to the sanitary sewer.

D. Limit the nature and extent of any activities that could result in the release or discharge of pollutants. Report any such release or discharge immediately to the Owner's Representative and clean up spills immediately, as detailed in Section 01 35 44 – Spill Control Procedures.

1.10 TEMPORARY RE-ROUTING OF PIPING AND DUCTWORK

A. Obtain approval from the Owner's Representative prior to any temporary re-routing of piping and exhaust ductwork necessary for the completion of the Work. Submit re-routing plans to the Owner's Representative in writing.

The following shall require approval of the Owner:

1. Temporary storm, sanitary or water line connections.

2. Temporary exhaust ductwork connections where such connections may impact air emissions.

B. Instruct all personnel to observe extreme caution when working in the vicinity of mechanical equipment and piping. Personnel shall not operate or tamper with any existing valves, switches, or other devices or equipment without prior approval by the Owner's Representative.

1.11 HAZARDOUS OR TOXIC MATERIALS

A. Inform officers, employees, agents, contractors, subcontractors at every tier, and any other party which may come into contact with any hazardous or toxic materials as a result of its performance hereunder of the nature of such materials, and any health and safety or environmental risks associated therewith.

B. Do not use hazardous or toxic materials in a manner that will violate Cornell University Policies or any state, federal, or municipal environmental health and safety regulations. In situations where the risks are unclear consult with Environmental Health and Safety (EH&S) for guidance.

C. Provide complete care and treatment for any injury sustained by any parties coming into contact with any hazardous or toxic materials as a result of Contractor's performance or failure to perform hereunder.

D. At the completion of project Contractor shall remove all unused chemical products and hazardous materials from campus. Transportation of these materials shall be in accordance with all federal, state, and local regulations. Request and receive written approval from EH&S prior to disposal of any on-site disposal.

1.12 DISPOSAL OF WASTE MATERIAL AND TITLE

A. Prior to start of work and first payment, Contractor shall prepare and submit "Contractor Waste Material Disposal Plan" to the Owner's Representative. The plan shall identify the waste transportation and treatment, storage or disposal (TSD) companies which will manage all waste material and any site(s) for disposal of the waste material. Contractor must use this form to document waste disposal methods and locations.

B. The "Contractor Waste Material Disposal Plan" form, together with definitions associated with the form waste descriptions. Forms may be downloaded at:

https://ehs.cornell.edu/sites/default/files/FRM-CWMDP-Contractor-Waste-Material-Disposal-Plan-IPDF.pdf

C. Contractor shall be responsible for the proper cleanup, containment, storage and disposal of any hazardous material/chemical spill occurring during its work. For Cornell University owned hazardous waste EH&S will oversee, approve or effect the proper disposal. Title, risk of loss, and all other incidents of ownership to the Waste Material, shall vest in Contractor at the time Contractor or any transporter acting on its behalf takes physical possession of Waste Material. Complete and maintain full records of the chain of custody and control, including certificates of disposal or destruction, of all Waste Materials loaded, transported and/or disposed of. Deliver all such records to the Owner in accordance with applicable laws and regulations and any instructions from the Owner in a timely manner and in any event prior to final payment(s) under this Contract.

2.0 PRODUCTS – NOT USED

3.0 EXECUTION – NOT USED

*****END OF SECTION 01 35 43*****

SECTION 01 35 44 SPILL CONTROL

1.0 GENERAL

1.1 SPILL PREVENTION

A. In order to minimize the potential for discharge to the environment of oil, petroleum, or hazardous substances on site, the following requirements shall apply to all projects:

1. All oil, petroleum, or hazardous materials stored or relocated temporarily on site during the construction process shall be stored in such a manner as to provide protection from vehicular damage and to provide containment of leaks or spills. Horizontal diked oil storage tanks, temporary berms or barriers, or similar methods shall be employed as appropriate at each site.

2. Any on-site filling or dispensing activities shall occur within an area in which a temporary berm, boom, or similar containment barrier has been placed to prevent the inadvertent discharge to the environment of harmful quantities of any products.

3. All oil, petroleum, or hazardous materials stored on site shall be located in such a manner as to minimize the potential of damage from construction operations or vehicles, away from drainage ways and environmentally sensitive areas, and in accordance with all fire and safety codes.

B. Remove immediately from the site any storage, dispensing, or operating equipment that is leaking oil or hazardous substances or is in anyway unsuitable for the safe storage of such materials.

1.2 SPILL CONTROL PROCEDURES

All Contractor personnel working at the project site shall be knowledgeable of the potential health and safety concerns associated with petroleum and other hazardous substances that could potentially be released at the project site. Following are a list of activities that should be conducted by the Contractor in the event of an oil/petroleum spill or the release of any other hazardous substance. In the event of a large quantity spill that would require cleanup procedures that are beyond the means of the Contractor, an emergency spill cleanup contractor shall be hired by the Contractor. In the event the Contractor has the personnel necessary to clean up the spill, the following procedures shall be followed:

A. Personnel discovering/responding to a spill shall:

1. Identify and locate the source of the spill. If unsafe conditions exist, leave the area, inform nearby personnel, notify the site supervisor, and initiate spill reporting (Section 1. 3).

2. Limit the discharge of product, if safely possible, by: (1) diverting discharge to a containment area; (2) creating temporary dikes with soils or other available materials; and (3) utilizing sorbent materials. If secondary containment is present, verify that valves and drains are closed prior to diverting the product to this area.

3. The individual discovering a spill shall initiate containment procedures to prevent material from reaching a potential migratory route, through implementation of the following actions, or any other methods necessary. Methods employed shall not compromise worker safety.

    a. Stop the spill at once (if possible).

    b. Extinguish sources of ignition (e.g., flames, sparks, hot surfaces, cigarettes, etc.).

    c. Clear personnel from the spill location and rope off the area.

    d. Utilize available spill control equipment in an effort to ensure that fires, explosions, and releases do not occur, recur, or spread.

    e. Use sorbent materials to control the spill at the source.

    f. Construct a temporary containment dike of sorbent materials, cinder blocks, bricks, or other suitable materials to help contain the spill.

    g. Attempt to identify the character, exact source, amount, and area of the released materials. Identification of the spilled material should be made as soon as possible so that the appropriate cleanup procedure can be identified.

    h. Assess possible hazards to human health or the environment as a result of the release, fire, or explosion.

    i. If spill response measures involve the temporary cessation of any operations, the Contractor shall monitor the affected equipment for: (1) leaks; (2) pressure buildup; (3) gas generation; or (4) ruptures in valves, pipes, or other equipment.

B. Spill Cleanup:

1. Following containment of the spill, the following spill cleanup procedures shall be initiated.

    a. Use proper waste containers.

    b. Remove bulk liquid by using vacuum, pump, sorbents, or shovel and place material in properly labeled waste container. Be sure not to collect incompatible or reactive substances in the same container.

    c. Cleanup materials not reclaimed on-site shall be disposed of in accordance with all applicable state and federal regulations.

d. Apply sorbent materials to pick up remaining liquid after bulk liquid has been removed. The Contractor shall not walk over spilled material. Absorbed material shall be picked up with a shovel and placed in a separate waste container, and shall not be mixed with bulk liquid.

e. Clean spill control equipment and containers. Replace equipment in its proper location. Restock or reorder any sorbents used to clean up the spill.

f. Carefully wash spilled product from skin and clothing using soap. Change clothes, if necessary, to avoid further contact with product.

g. Disposal of all spilled product shall be made off-site, and shall be arranged through the Contractor.

h. A Spill Report shall be completed, including a description of the event. A sample Spill Documentation Form is provided in Appendix B.

C. Fire or Explosion:

1. In the event of a fire or explosion at the site, the Contractor shall:

a. Verify that the local fire department and the appropriate response personnel (e.g., ambulance, police) have been notified.

b. Report to the scene, if safe to do so, and evaluate the situation (e.g., spill character, source, etc.). Coordinate, as necessary, with other appropriate site and emergency personnel.

c. Ensure that people are cleared from the area.

d. Ensure that fires are safely extinguished (if possible), valves closed, and other immediate actions necessary to mitigate the emergency, if safe to do so.

e. Initiate responsible measures necessary to prevent subsequent fires, explosions, or releases from occurring or spreading to other areas of the site. These measures include stopping processes or operations, collecting and containing released oil, or removing and isolating containers.

f. Take appropriate action to monitor for: (1) leaks; (2) pressure build-ups; (3) gas generation; or (4) ruptures in pipes, valves, or other equipment.

1.3 SPILL REPORTING AND DOCUMENTATION

In the event of a spill CALL CORNELL POLICE AT 255-1111 who will notify the appropriate departments within the university and coordinate with the contractor for external reporting, if required.

The contractor shall be responsible for the initiation of spill reporting and documentation procedures. All petroleum spills must be reported to **NYSDEC Spill Hotline at 1-800- 457-7362**, less than two hours following discovery. Notification must be made to Cornell Environmental Health and Safety (EH&S), 607.255.8200, within 24 hours of reporting the release. The Contractor will be expected to provide EH&S with the DEC issued spill number. Any petroleum spill must be reported to NYSDEC unless **ALL** of the following criteria apply:

TABLE 1
CRITERIA TO EXEMPT SPILL REPORTING

CRITERIA	DESCRIPTION
Quantity	The spill must be known to be less than 5 gallons.
Containment	The spill must be contained on an impervious surface or within an impervious structure, such that it cannot enter the environment.
Control	The spill must be under control and not reach a drain or leave the impervious surface.
Cleanup	The spill must be cleaned-up within two hours of occurrence.
Environment	The spill must not have already entered into the soil or groundwater or onto surface water.

A release of a "reportable quantity"1 or unknown amount of a hazardous substance must also be immediately reported to NYSDEC Spill Hotline. Spills of reportable quantities of chemicals or "harmful quantities"2 of oil to navigable waters must be reported to the federal **National Response Center, 1-800-424-8802**.

Spill Reporting Information: When making a telephone report, the caller should be prepared to provide the following information, if possible:

1. The date and time of the spill or release.

2. The identity or chemical name of the material released or spilled, including an indication of whether the material is defined as an extremely hazardous substance.

3. An estimate of the quantity of material released or spilled into the environment and the approximate duration of the event.

4. The exact location of the spill, including the name(s) of the waters involved or threatened, and/or other medium or media affected by the release or spill.

5. The source of the release or spill.

6. The name, address, and telephone number of the party in charge of, or responsible for, the facility or activity associated with the release or spill.

7. The extent of the actual and potential water pollution.

8. The name and telephone number of the person in charge of operations at the spill site.

9. The steps being taken or proposed to contain and cleanup the released or spilled material and any precautions taken to minimize impacts, including evacuation.

10. The extent of injuries, if any.

11. Any known or anticipated acute or chronic health risks associated with the emergency, and information regarding necessary medical attention for exposed individuals.

12. Assistance required, if any.

If the release of a hazardous substance or oil occurs in an amount which exceeds a reportable quantity (RQ) as defined in 40 CFR Part 110, 40 CFR Part 117, 40 CFR Part 302, or 6 NYCRR Part 597, then the Contractor shall do the following:

1. Call to the National Response Center shall be made by the person in charge of the site. The applicable phone numbers are 1-800-424-8802 or 1-202-426-2675.

2. Within 14 days of the release, submit a written description of the release. The description should include: (1) a description of the release, (2) the type of material released, (3) estimated amount of the spill; (4) the date of the release, (5) an explanation of why the release occurred; and (6) a description of the measures to be implemented to prevent and control future releases.

(1)*Reportable Quantity*: A Reportable Quantity is the quantity of a hazardous substance or oil that triggers reporting requirements under the Comprehensive Emergency Response, Compensation, and Liability Act (CERCLA) (USEPA, September 1992). While the Contractor is legally responsible for knowing the risks of materials that are part of construction, members of the owner's spill response team have access to information that may help identify these quantities with you.

(2)*Harmful Quantity*: A Harmful Quantity of oil includes discharges that violate applicable water quality standards; cause a film, sheen, or discoloration on a water surface or adjoining shoreline; or cause a sludge or emulsion to be deposited beneath the water surface or shoreline (40 CFR 110.3).

2.0 PRODUCTS – NOT USED

3.0 EXECUTION – NOT USED

*****END OF SECTION 01 35 44*****

SECTION 01 35 45 REFRIGERANT COMPLIANCE

1.0 GENERAL

1.1 DESCRIPTION

A. The Contractor shall be responsible and accountable for compliance with the EPA Clean Air Act (CAA) Section 608, 40 CFR Part 82 and any state or local codes for all refrigerant-related work. In general, an EPA-certified technician shall perform any activity involving refrigerant-containing equipment that includes: (1) attaching and detaching hoses and gauges to and from refrigerant containing equipment to measure pressure; (2) adding refrigerant to, or removing refrigerant from equipment; or (3) any other activity that violates the integrity of a refrigerant containing circuit (for example any activity where a refrigerant containing circuit is 'opened' in any manner).

B. Refrigerant and oil shall be recovered from any equipment that does not meet the definition of a small appliance in 40CFR Part 82 Subpart F before removal and subsequent disposal. Small appliances (as defined in 40CFR Part 82 Subpart F) may be removed from the site with the charge (refrigerant) intact, provided it is properly labeled and handled in such a manner so as to prevent damage to coils. Small Appliances are defined in 40CFR Part 82 Subpart F as: Any appliance that is fully manufactured, charged, and hermetically sealed in a factory with five (5) pounds or less of a Class I or Class II substance used as a refrigerant, including, but not limited to, refrigerators and freezers (designed for home, commercial, or consumer use), medical or industrial research refrigeration equipment, room air conditioners (including window air conditioners and packaged terminal air heat pumps), dehumidifiers, under-the-counter ice makers, vending machines, and drinking water coolers.

C. All new equipment installed shall utilize non-CFC refrigerants.

1.2 SUBMITTALS

A. Prior to starting construction, demolition, or service work Contractor shall provide to Owner a list of all service technicians with EPA certification numbers and level of certification. (Copies of EPA certification cards are acceptable for those who will be working on the site.)

1.3 RECORD DOCUMENTS

A. Contractor shall provide to the Owners Representative all Service Invoices (or equivalent service documentation acceptable to owner) for all work performed by EPA- certified Technicians. Service Invoices (or equivalent documentation) shall include the following information at a minimum for each piece of refrigerant containing equipment serviced:

- Date of Service
- Name of EPA-Certified Technician
- Technicians Certification Level
- Type of Equipment Serviced
- Equipment Manufacture
- Equipment Model and Serial Number
- Description of Service Performed
- Date Leak Discovered (if applicable)
- Date Leak Repaired (if applicable)
- Date Follow-Up Leak Test Performed (if applicable)
- Type of Refrigerant
- Normal System Full Charge (in pounds)
- Amount of Initial Refrigerant Charge Recovered During Service
- Amount of Recovered Refrigerant Returned to System
- Type of Additional Refrigerant Added to System
- Amount of Additional Refrigerant Charged to System
- System Charge at End of Service

B. Contractor shall provide to Cornell's Environmental Health and Safety Office and IPP Facilities Management Administration Preventative Maintenance Group, via the Owner's Representative, complete equipment documentation including: make, model number, serial number, refrigerant type and full refrigerant charge (quantity), equipment ID tag number and location (room number) for all equipment installed that does not meet the definition of a small appliance (40CFR Part 82).

C. Contractor shall provide Owners Representative a copy of complete manifests, invoices, or other documentation showing any refrigerant removed from the project by the contractor was disposed of appropriately or reclaimed by an EPA-certified reclaimer.

2.0 PRODUCTS – NOT USED

3.0 EXECUTION

3.1 LEAK TESTING

A. All new equipment not meeting the definition of a small appliance, including packaged equipment, factory charged, field charged, split systems or field-constructed systems with field-installed refrigerant piping shall be leak tested prior to or during startup. Leak testing shall utilize appropriate electronic leak-testing equipment.

B. Leak testing shall be conducted by an EPA-certified technician. The contractor shall provide written verification of the leak testing and results.

C. If a leak is detected, the following procedure shall be followed:

1. Notify the Owner's Site Representative (who will notify the Refrigerant Compliance Coordinator).

2. Document the leak.

3. Repair the leak.

4. Document the procedures followed.

5. Leak test to verify the leak was repaired.

6. Schedule and provide a 30-day follow-up verification leak test witnessed by a designated HVAC technician.

7. Document follow-up leak testing.

8. Repeat the above process if follow-up leak is detected.

3.2 DEMOLITION PROCEDURE FOR EQUIPMENT REMOVED BY CONTRACTOR

A. The Contractor, in contractor-provided refrigerant recovery cylinders, shall take ownership of the recovered refrigerant and transport off site to a proper disposal company or certified reclaimer.

B. Service Invoices, as described in RECORD DOCUMENTS, shall be provided.

C. The Contractor technician shall tag the unit that the refrigerant was removed.

D. Once an EPA-certified technician has removed the refrigerant and tagged the unit, a non-certified person may perform the remainder of the demolition.

*****END OF SECTION 01 35 45*****

SECTION 01 41 00 REGULATORY REQUIREMENTS

1.0 GENERAL

1.1 PERMITS AND LICENSES

A. The Contractor shall obtain, maintain and pay for all permits and licenses necessary for the execution of the Work and for the use of such Work when completed. Such permits shall include but are not limited to building, electrical, plumbing, backflow prevention, dig safe, fill, street use and building demolition.

1. Town of Ithaca building permit applications shall be presented for review at the regularly scheduled Owner's meeting with the Authority Having Jurisdiction (AHJ).

B. For any projects which include demolition of a structure or load-bearing elements of a structure, the Contractor is required to complete a "Notification of Demolition and Renovation" and provide this notification to the United State Environmental Protection Agency (EPA) in advance of the work as specified in 40 CFR 61.145. The Contractor shall also provide a copy of this notification to the Owner's Representative prior to any demolition.

C. All Construction / Building / Hot Work and Occupancy permits shall be issued and maintained through the Town of Ithaca.

D. Ithaca Fire Department Permitting:

1. A permit is required from the Ithaca Fire Department to install or substantially repair a fire suppression, fire detection, or fire alarm system as such as defined under the Uniform Code of New York State.

2. If the scope of work is classified under the Existing Building Code of NYS as Alteration –Level 1; Alteration – Level 2; Alteration – Level 3; or Addition; a permit from the Ithaca Fire Department is required for all work affecting the fire suppression, fire detection, or fire alarm system for that building. A building permit is also required for this type of work.

3. Work classified as a 'Repair' under the Existing Building Code of NYS does not require a permit from the Ithaca Fire Department.

1.2 INSPECTIONS

A. Apply for and obtain all required inspections, pay all fees and charges for same, include all service charges, pavement cuts and repairs.

1.3 COMPLIANCE

A. The Contractor shall give all notices, pay all fees and comply with all laws, rules and regulations applicable to the Work.

1.4 OWNER'S REQUIREMENTS

A. The Contractor, Subcontractors, and employees of the Contractor and Subcontractors shall comply with all regulations governing conduct, access to the premises, operation of equipment and systems, and conduct while in or near the premises and shall perform the Work in such a manner as not to unreasonably interrupt or interfere with the conduct of business of the Owner.

B. Upon completion of the project, the Contractor agrees to provide the Owner with a summary of municipal permit fees paid. This shall include the name of the permits secured, the permit fees paid by the Contractor and a copy of the permit. If no permit fees were required, the Contractor shall so state, in writing, upon completion of the project.

2.0 PRODUCTS – NOT USED

3.0 EXECUTION – NOT USED

*****END OF SECTION 01 41 00*****

SECTION 01 42 00 REFERENCES

1.0 GENERAL

1.1 INTENT OF CONTRACT DOCUMENTS

A. Notes or instructions shown on any one Drawing, apply where applicable, to all other Drawings.

B. All references to codes, specifications and standards referred to in the Specification Sections and on the Drawings shall mean, and are intended to be, the latest edition, amendment and/or revision of such reference standard in effect as of the date of these Contract Documents.

C. Install All Work in Compliance with:

1. NYS Uniform Code
    a. International Building Code
    b. International Residential Code
    c. International Existing Building Code
    d. International Fire Code
    e. International Plumbing Code
    f. International Mechanical Code
    g. International Fuel Gas Code
    h. International Property Maintenance Code
    i. Uniform Code Supplement
2. NYS Energy Code
    a. International Energy Conservation Code
    b. ASHRAE 90.1
    c. Energy Code Supplement
3. National Electric Code
4. Occupational Safety and Health Administration (OSHA).
5. Life Safety Code NFPA 101.
6. All local ordinances

7. Plans and Specifications in excess of code requirements and not contrary to same.

1.2 RELATED DOCUMENTS

A. Drawings and general provisions of the Contract, including General and other Division 1 Specification Sections, apply to this Section.

1.3 DEFINITIONS

A. "General": Basic Contract definitions are included in the Conditions of the Contract.

B. "Contract Documents": The Contract Documents consist of the Agreement between Owner and Contractor, General Conditions, General Requirements, Drawings, Specifications, addenda issued before execution of the Agreement, other documents listed in the Agreement, and modifications issued after execution of the Agreement.

C. "The Contract": The Contract Documents form the Contract for construction and represent the entire integrated Agreement between the Owner and Contractor.

D. "The Work": The work comprises the completed construction required by the Contract Documents and includes all labor necessary to produce such construction and all materials and equipment incorporated in such construction.

E. "Owner": Cornell University a New York corporation.

F. "Architect/Engineer": The Architect or Engineer is the person lawfully licensed to practice architecture and/or engineering in the state of New York, identified as such in the Owner Contractor Agreement, and is referred to throughout the Contract Documents as if singular in number. The terms Architect and/or Engineer mean the Architect and/or his authorized representative.

G. "Contractor": The Contractor, person, firm, or corporation with whom the Construction Agreement contract is made by Owner.

H. "Subcontractor": A person, firm, or corporation, supplying labor and/or materials for work at site of the project for and under separate contract or agreement with Contractor.

I. "Delegated Design" describes a collaboration between a design professional and contractor (or subcontractor) where the contractor assumes allocated responsibility for an element or portion of the Project's design. Delegated design allocation and assignment may occur in any project delivery method and will involve a licensed professional to perform the design. The Contractor or Subcontractor allocated an element or portion of the Project's design, will submit its engineered, stamped plans to the primary design team, who will check for any conflicts with any other aspect of the Work and make new documents to be included in the Project's design record. Contractor or Subcontractor allocated a delegated design element of the Project shall provide professional liability insurance for the design work in such amounts and as is required by Owner.

J. "As Approved" or "Approved": Architect's or Owner's approval.

K. “As Directed”: Owner’s direction or instruction. Other terms including "requested," "authorized," "selected," "required," and "permitted" have the same meaning as "directed."

L. “Indicated”: Requirements expressed by graphic representations or in written form on Drawings, in Specifications, and in other Contract Documents. Other terms including "shown," "noted," "scheduled," and "specified" have the same meaning as “indicated.”

M. “Regulations”: Laws, ordinances, statutes, and lawful orders issued by authorities having jurisdiction, and rules, conventions, and agreements within the construction industry that control performance of the Work.

N. “Furnish”: Supply and deliver to Project site, ready for unloading, unpacking, assembly, installation, and similar operations.

O. "Install": Operations at Project site including unloading, temporarily storing, unpacking, assembling, erecting, placing, anchoring, applying, working to dimension, finishing, curing, protecting, cleaning, and similar operations.

P. “Reinstall”. To place back into a former position.

Q. “Replace”. Provide a substitute for.

R. “Provide”: Furnish and install, complete and ready for the intended use.

S. “Concealed’: Work installed in pipe shafts, chases or recesses, behind furred walls, above ceilings, either permanent or removable.

T. “Exposed”: All capital Work not identified as concealed.

U. “Project Site”: Space available for performing construction activities. The extent of Project site is shown on Drawings and may or may not be identical with the description of the land on which Project is to be built.

V. “As-Built Documents”: Drawings and other records that are maintained by the Contractor to record all conditions which exist when the building construction is completed. This includes both the elements of the project itself and existing elements that are encountered during the course of project construction.

W. “Record Drawings”: Shows construction changes in the project and the final location of all services, lines, outlets, and connections including underground and concealed items. The “record” drawings shall be compiled by the Architect based on the working as-built drawings and revised in accordance with the marked up drawings submitted by the Contractor.

X. “Shop Drawings”: Drawings, diagrams, illustrations, charts, brochures, and other data that are prepared by Contractor or any Subcontractor, manufacturer, supplier or distributor, for some portion of the work.

Y. “Samples”: Physical examples furnished to illustrate materials, equipment or workmanship, and to establish standards by which the work will be judged.

Z. “General Conditions”: The standardized contractual provisions describing the responsibilities, rights and relationships of the Owner and Contractor under the construction contract.

AA. "Contract Limit Lines": A limit line or perimeter line established on the drawings or elsewhere in the contract documents defining the boundaries of the site available to the contractor for construction purposes.

BB. "to do", "provide", "furnish", "install", etc., in these Specifications or on Drawings are directions given to the Contractor.

1.4 OWNER AGREEMENTS

A. Cornell University and the Tompkins-Cortland Counties Building Trades Council, Maintenance Division have entered into an agreement. The local unions which are members of the Tompkins-Cortland Counties Building Trades Council, Maintenance Division are as follows:

Local #241 - International Brotherhood of Electrical Workers
Local #267 - United Association of Plumbers and Steamfitters
Local #281 - United Brotherhood of Carpenters
Local #3NY - International Union of Bricklayers and Allied Craftworkers
Local #178 - International Union of Painters and Allied Trades
Local #112 - International Brotherhood of Sheetmetal Workers
Local #785 - Laborers International Union of North America

The definition of craft maintenance as applied to this agreement shall be as follows:

All work associated with the demolition, repair, replacement, improvement to or construction of equipment, buildings, structures, utilities, and/or system or components thereof. Craft maintenance for trades assistants shall be limited to work assigned to individuals employed as building trade laborers and which directly assists the craft work performed by other employees covered by this agreement; the Employer is free to assign such work; provided, however, such assignment does not fall within the craft performed by other employees covered by this agreement.

1.5 INDUSTRY STANDARDS

A. Applicability of Standards: Unless the Contract Documents include more stringent requirements, applicable construction industry standards have the same force and effect as if bound or copied directly into the Contract Documents to the extent referenced. Such standards are made a part of the Contract Documents by reference.

B. Publication Dates: Comply with standards in effect as of date of the Contract Documents unless otherwise indicated.

C. Copies of Standards: Each entity engaged in construction on Project should be familiar with industry standards applicable to its construction activity. Copies of applicable standards are not bound with the Contract Documents.

1. Where copies of standards are needed to perform a required construction activity, obtain copies directly from publication source.

D. Abbreviations and Acronyms for Standards and Regulations: Where abbreviations and acronyms are used in Specifications or other Contract Documents, they shall mean the

recognized name of the organizations responsible for the standards and regulations in the following list. Names, telephone numbers, and Web sites are subject to change and are believed to be accurate and up-to-date as of the date of the Contract Documents.

ADAAG	Americans with Disabilities Act (ADA) Architectural Barriers Act (ABA) Accessibility Guidelines for Buildings and Facilities Available from Access Board www.access-board.gov	(800) 872-2253 (202) 272-0080
CFR	Code of Federal Regulations Available from Government Printing Office www.gpoaccess.gov/cfr/index.html	(866) 512-1800 (202) 512-1800
FS	Federal Specification Available from Department of Defense Single Stock Point http://dodssp.daps.dla.mil	(215) 697-6257
	Available from Defense Standardization Program www.dps.dla.mil	
	Available from General Services Administration www.gsa.gov	(202) 619-8925
	Available from National Institute of Building Sciences www.nibs.org	(202) 289-7800
UFAS	Uniform Federal Accessibility Standards Available from Access Board www.access-board.gov	(800) 872-2253 (202) 272-0080

1.6 ABBREVIATIONS AND ACRONYMS

A. Industry Organizations: Where abbreviations and acronyms are used in Specifications or other Contract Documents, they shall mean the recognized name of the entities in the following list. Names, telephone numbers, and Web sites are subject to change and are believed to be accurate and up-to-date as of the date of the Contract Documents.

AA	Aluminum Association, Inc. (The) www.aluminum.org	(703) 358-2960
AAADM	American Association of Automatic Door Manufacturers www.aaadm.com	(216) 241-7333
AABC	Associated Air Balance Council www.aabchq.com	(202) 737-0202
AAMA	American Architectural Manufacturers Association www.aamanet.org	(847) 303-5664

AASHTO	American Association of State Highway and Transportation Officials www.transportation.org	(202) 624-5800
AATCC	American Association of Textile Chemists and Colorists (The) www.aatcc.org	(919) 549-8141
ABAA	Air Barrier Association of America www.airbarrier.org	(866) 956-5888
ABMA	American Bearing Manufacturers Association www.abma-dc.org	(202) 367-1155
ACI	ACI International (American Concrete Institute) www.aci-int.org	(248) 848-3700
ACPA	American Concrete Pipe Association www.concrete-pipe.org	(972) 506-7216
AEIC	Association of Edison Illuminating Companies, Inc. (The) www.aeic.org	(205) 257-2530
AF&PA	American Forest & Paper Association www.afandpa.org	(800) 878-8878 (202) 463-2700
AGA	American Gas Association www.aga.org	(202) 824-7000
AGC	Associated General Contractors of America (The) www.agc.org	(703) 548-3118
AHAM	Association of Home Appliance Manufacturers www.aham.org	(202) 872-5955
AI	Asphalt Institute www.asphaltinstitute.org	(859) 288-4960
AIA	American Institute of Architects (The) www.aia.org	(800) 242-3837 (202) 626-7300
AISC	American Institute of Steel Construction www.aisc.org	(800) 644-2400 (312) 670-2400
AISI	American Iron and Steel Institute www.steel.org	(202) 452-7100
AITC	American Institute of Timber Construction www.aitc-glulam.org	(303) 792-9559
ALCA	Associated Landscape Contractors of America	

	(Now PLANET - Professional Landcare Network)	
ALSC	American Lumber Standard Committee, Incorporated www.alsc.org	(301) 972-1700
AMCA	Air Movement and Control Association International, Inc. www.amca.org	(847) 394-0150
ANSI	American National Standards Institute www.ansi.org	(202) 293-8020
AOSA	Association of Official Seed Analysts, Inc. www.aosaseed.com	(505) 522-1437
APA	APA - The Engineered Wood Association www.apawood.org	(253) 565-6600
APA	Architectural Precast Association www.archprecast.org	(239) 454-6989
API	American Petroleum Institute www.api.org	(202) 682-8000
ARI	Air-Conditioning & Refrigeration Institute www.ari.org	(703) 524-8800
ARMA	Asphalt Roofing Manufacturers Association www.asphaltroofing.org	(202) 207-0917
ASCE	American Society of Civil Engineers www.asce.org	(800) 548-2723 (703) 295-6300
ASHRAE	American Society of Heating, Refrigerating and Air-Conditioning Engineers www.ashrae.org	(800) 527-4723 (404) 636-8400
ASME	ASME International (The American Society of Mechanical Engineers International) www.asme.org	(800) 843-2763 (973) 882-1170
ASSE	American Society of Sanitary Engineering www.asse-plumbing.org	(440) 835-3040
ASTM	ASTM International (American Society for Testing and Materials International) www.astm.org	(610) 832-9585
AWI	Architectural Woodwork Institute www.awinet.org	(800) 449-8811 (703) 733-0600
AWPA	American Wood-Preservers' Association	(334) 874-9800

	www.awpa.com	
AWS	American Welding Society www.aws.org	(800) 443-9353 (305) 443-9353
AWWA	American Water Works Association www.awwa.org	(800) 926-7337 (303) 794-7711
BHMA	Builders Hardware Manufacturers Association www.buildershardware.com	(212) 297-2122
BIA	Brick Industry Association (The) www.bia.org	(703) 620-0010
BICSI	BICSI www.bicsi.org	(800) 242-7405 (813) 979-1991
BISSC	Baking Industry Sanitation Standards Committee www.bissc.org	(866) 342-4772
CCC	Carpet Cushion Council www.carpetcushion.org	(203) 637-1312
CDA	Copper Development Association www.copper.org	(800) 232-3282 (212) 251-7200
CGA	Compressed Gas Association www.cganet.com	(703) 788-2700
CIMA	Cellulose Insulation Manufacturers Association www.cellulose.org	(888) 881-2462 (937) 222-2462
CISCA	Ceilings & Interior Systems Construction Association www.cisca.org	(630) 584-1919
CISPI	Cast Iron Soil Pipe Institute www.cispi.org	(423) 892-0137
CLFMI	Chain Link Fence Manufacturers Institute www.chainlinkinfo.org	(301) 596-2583
CPA	Composite Panel Association www.pbmdf.com	(301) 670-0604
CPPA	Corrugated Polyethylene Pipe Association www.cppa-info.org	(800) 510-2772 (202) 462-9607
CRI	Carpet & Rug Institute (The) www.carpet-rug.com	(800) 882-8846 (706) 278-3176
CRSI	Concrete Reinforcing Steel Institute	(847) 517-1200

	www.crsi.org	
CSI	Cast Stone Institute www.caststone.org	(770) 972-3011
CSI	Construction Specifications Institute (The) www.csinet.org	(800) 689-2900 (703) 684-0300
CSSB	Cedar Shake & Shingle Bureau www.cedarbureau.org	(604) 820-7700
CTI	Cooling Technology Institute www.cti.org	(281) 583-4087
DHI	Door and Hardware Institute www.dhi.org	(703) 222-2010
EIA	Electronic Industries Alliance www.eia.org	(703) 907-7500
EIMA	EIFS Industry Members Association www.eima.com	(800) 294-3462 (770) 968-7945
EJCDC	Engineers Joint Contract Documents Committee www.ejdc.org	(703) 295-5000
EJMA	Expansion Joint Manufacturers Association, Inc. www.ejma.org	(914) 332-0040
ESD	ESD Association www.esda.org	(315) 339-6937
FMG	FM Global www.fmglobal.com	(401) 275-3000
FSA	Fluid Sealing Association www.fluidsealing.com	(610) 971-4850
FSC	Forest Stewardship Council www.fsc.org	49 228 367 66 0
GA	Gypsum Association www.gypsum.org	(202) 289-5440
GANA	Glass Association of North America www.glasswebsite.com	(785) 271-0208
GS	Green Seal www.greenseal.org	(202) 872-6400
GSI	Geosynthetic Institute	(610) 522-8440

	www.geosynthetic-institute.org	
HI	Hydraulic Institute www.pumps.org	(888) 786-7744 (973) 267-9700
HI	Hydronics Institute www.gamanet.org	(908) 464-8200
HPVA	Hardwood Plywood & Veneer Association www.hpva.org	(703) 435-2900
HPW	H. P. White Laboratory, Inc. www.hpwhite.com	(410) 838-6550
IBR	Institute of Boiler & Radiation Manufacturers	
ICEA	Insulated Cable Engineers Association, Inc. www.icea.net	(770) 830-0369
ICRI	International Concrete Repair Institute, Inc. www.icri.org	(847) 827-0830
IEC	International Electrotechnical Commission www.iec.ch	41 22 919 02 11
IEEE	Institute of Electrical and Electronics Engineers, Inc. (The) www.ieee.org	(212) 419-7900
IESNA	Illuminating Engineering Society of North America www.iesna.org	(212) 248-5000
IEST	Institute of Environmental Sciences and Technology www.iest.org	(847) 255-1561
IGCC	Insulating Glass Certification Council www.igcc.org	(315) 646-2234
IGMA	Insulating Glass Manufacturers Alliance www.igmaonline.org	(613) 233-1510
ILI	Indiana Limestone Institute of America, Inc. www.iliai.com	(812) 275-4426
ISO	International Organization for Standardization www.iso.ch	41 22 749 01 11
	Available from ANSI www.ansi.org	(202) 293-8020
ISSFA	International Solid Surface Fabricators Association	(877) 464-7732

	www.issfa.net	(702) 567-8150
ITS	Intertek www.intertek.com	(800) 345-3851 (713) 407-3500
ITU	International Telecommunication Union www.itu.int/home	41 22 730 51 11
KCMA	Kitchen Cabinet Manufacturers Association www.kcma.org	(703) 264-1690
LMA	Laminating Materials Association (Now part of CPA)	
LPI	Lightning Protection Institute www.lightning.org	(800) 488-6864 (804) 314-8955
MBMA	Metal Building Manufacturers Association www.mbma.com	(216) 241-7333
MFMA	Maple Flooring Manufacturers Association, Inc. www.maplefloor.org	(847) 480-9138
MFMA	Metal Framing Manufacturers Association www.metalframingmfg.org	(312) 644-6610
MHIA	Material Handling Industry of America www.mhia.org	(800) 345-1815 (704) 676-1190
MIA	Marble Institute of America www.marble-institute.com	(440) 250-9222
MPI	Master Painters Institute www.paintinfo.com	(888) 674-8937
MSS	Manufacturers Standardization Society of The Valve and Fittings Industry Inc. www.mss-hq.com	(703) 281-6613
NAAMM	National Association of Architectural Metal Manufacturers www.naamm.org	(312) 332-0405
NACE	NACE International (National Association of Corrosion Engineers International) www.nace.org	(800) 797-6623 (281) 228-6200
NADCA	National Air Duct Cleaners Association www.nadca.com	(202) 737-2926
NAIMA	North American Insulation Manufacturers Association www.naima.org	(703) 684-0084

NBGQA	National Building Granite Quarries Association, Inc. www.nbgqa.com	(800) 557-2848
NCAA	National Collegiate Athletic Association (The) www.ncaa.org	(317) 917-6222
NCMA	National Concrete Masonry Association www.ncma.org	(703) 713-1900
NCPI	National Clay Pipe Institute www.ncpi.org	(262) 248-9094
NCTA	National Cable & Telecommunications Association www.ncta.com	(202) 775-3550
NEBB	National Environmental Balancing Bureau www.nebb.org	(301) 977-3698
NECA	National Electrical Contractors Association www.necanet.org	(301) 657-3110
NeLMA	Northeastern Lumber Manufacturers' Association www.nelma.org	(207) 829-6901
NEMA	National Electrical Manufacturers Association www.nema.org	(703) 841-3200
NETA	International Electrical Testing Association www.netaworld.org	(888) 300-6382 (303) 697-8441
NFHS	National Federation of State High School Associations www.nfhs.org	(317) 972-6900
NFPA	NFPA (National Fire Protection Association) www.nfpa.org	(800) 344-3555 (617) 770-3000
NFRC	National Fenestration Rating Council www.nfrc.org	(301) 589-1776
NGA	National Glass Association www.glass.org	(866) 342-5642 (703) 442-4890
NHLA	National Hardwood Lumber Association www.natlhardwood.org	(800) 933-0318 (901) 377-1818
NLGA	National Lumber Grades Authority www.nlga.org	(604) 524-2393

NOFMA	NOFMA: The Wood Flooring Manufacturers Association www.nofma.org	(901) 526-5016
NRCA	National Roofing Contractors Association www.nrca.net	(800) 323-9545 (847) 299-9070
NRMCA	National Ready Mixed Concrete Association www.nrmca.org	(888) 846-7622 (301) 587-1400
NSF	NSF International (National Sanitation Foundation International) www.nsf.org	(800) 673-6275 (734) 769-8010
NSSGA	National Stone, Sand & Gravel Association www.nssga.org	(800) 342-1415 (703) 525-8788
NTMA	National Terrazzo & Mosaic Association, Inc. (The) www.ntma.com	(800) 323-9736 (540) 751-0930
NYBFU	New York Board of Fire Underwriters www.nybfu.org	(212) 227-3700
PCI	Precast/Prestressed Concrete Institute www.pci.org	(312) 786-0300
PDCA	Painting & Decorating Contractors of America www.pdca.com	(800) 332-7322 (314) 514-7322
PDI	Plumbing & Drainage Institute www.pdionline.org	(800) 589-8956 (978) 557-0720
PGI	PVC Geomembrane Institute http://pgi-tp.ce.uiuc.edu	(217) 333-3929
PLANET	Professional Landcare Network www.landcarenetwork.org	(800) 395-2522
PTI	Post-Tensioning Institute www.post-tensioning.org	(602) 870-7540
RCSC	Research Council on Structural Connections www.boltcouncil.org	(800) 644-2400 (312) 670-2400
RFCI	Resilient Floor Covering Institute www.rfci.com	(301) 340-8580
RIS	Redwood Inspection Service www.calredwood.org	(888) 225-7339 (415) 382-0662

SAE	SAE International www.sae.org	(877) 606-7323 (724) 776-4841
SBI	Steel Boiler Institute	
SDI	Steel Deck Institute www.sdi.org	(847) 458-4647
SDI	Steel Door Institute www.steeldoor.org	(440) 899-0010
SEFA	Scientific Equipment and Furniture Association www.sefalabs.com	(516) 294-5424
SGCC	Safety Glazing Certification Council www.sgcc.org	(315) 646-2234
SIA	Security Industry Association www.siaonline.org	(703) 683-2075
SJI	Steel Joist Institute www.steeljoist.org	(843) 626-1995
SMA	Screen Manufacturers Association www.smacentral.org	(561) 533-0991
SMACNA	Sheet Metal and Air Conditioning Contractors' National Association www.smacna.org	(703) 803-2980
SMPTE	Society of Motion Picture and Television Engineers www.smpte.org	(914) 761-1100
SPFA	Spray Polyurethane Foam Alliance www.sprayfoam.org	(800) 523-6154
SPIB	Southern Pine Inspection Bureau (The) www.spib.org	(850) 434-2611
SPRI	Single Ply Roofing Industry www.spri.org	(781) 647-7026
SSINA	Specialty Steel Industry of North America www.ssina.com	(800) 982-0355 (202) 342-8630
SSPC	SSPC: The Society for Protective Coatings www.sspc.org	(877) 281-7772 (412) 281-2331
STI	Steel Tank Institute www.steeltank.com	(847) 438-8265

SWI	Steel Window Institute www.steelwindows.com	(216) 241-7333
SWRI	Sealant, Waterproofing, & Restoration Institute www.swrionline.org	(816) 472-7974
TCA	Tile Council of America, Inc. www.tileusa.com	(864) 646-8453
TIA/EIA	Telecommunications Industry Association/Electronic Industries Alliance www.tiaonline.org	(703) 907-7700
TMS	The Masonry Society www.masonrysociety.org	(303) 939-9700
TPI	Truss Plate Institute, Inc. www.tpinst.org	(703) 683-1010
TPI	Turfgrass Producers International www.turfgrasssod.org	(847) 649-5555
TRI	Tile Roofing Institute www.tileroofing.org	(312) 670-4177
UFPO	Underground Facilities Protective Organization www.ufpo.org	(800) 962-7962 (800) 962-7811
UL	Underwriters Laboratories Inc. www.ul.com	(877) 854-3577 (847) 272-8800
UNI	Uni-Bell PVC Pipe Association www.uni-bell.org	(972) 243-3902
USGBC	U.S. Green Building Council www.usgbc.org	(202) 828-7422
WASTEC	Waste Equipment Technology Association www.wastec.org	(800) 424-2869 (202) 244-4700
WCSC	Window Covering Safety Council www.windowcoverings.org	(800) 506-4636
WDMA	Window & Door Manufacturers Association www.wdma.com	(800) 223-2301
WI	Woodwork Institute www.wicnet.org	(916) 372-9943
WMMPA	Wood Moulding & Millwork Producers Association	(800) 550-7889

	www.wmmpa.com	(530) 661-9591
WSRCA	Western States Roofing Contractors Association www.wsrca.com	(800) 725-0333 (650) 570-5441
WWPA	Western Wood Products Association www.wwpa.org	(503) 224-3930

B. Code Agencies: Where abbreviations and acronyms are used in Specifications or other Contract Documents, they shall mean the recognized name of the entities in the following list. Names, telephone numbers, and Web sites are subject to change and are believed to be accurate and up-to-date as of the date of the Contract Documents.

IAPMO	International Association of Plumbing and Mechanical Officials www.iapmo.org	(909) 472-4100
ICC	International Code Council www.iccsafe.org	(888) 422-7233 (703) 931-4533
ICC-ES	ICC Evaluation Service, Inc. www.icc-es.org	(800) 423-6587 (562) 699-0543
NEC	National Electric Code	

C. Federal Government Agencies: Where abbreviations and acronyms are used in Specifications or other Contract Documents, they shall mean the recognized name of the entities in the following list. Names, telephone numbers, and Web sites are subject to change and are believed to be accurate and up-to-date as of the date of the Contract Documents.

CE	Army Corps of Engineers www.usace.army.mil	
CPSC	Consumer Product Safety Commission www.cpsc.gov	(800) 638-2772 (301) 504-7923
DOC	Department of Commerce www.commerce.gov	(202) 482-2000
DOD	Department of Defense http://.dodssp.daps.dla.mil	(215) 697-6257
DOE	Department of Energy www.energy.gov	(202) 586-9220
EPA	Environmental Protection Agency www.epa.gov	(202) 272-0167
FAA	Federal Aviation Administration	(866) 835-5322

	www.faa.gov	
FCC	Federal Communications Commission www.fcc.gov	(888) 225-5322
FDA	Food and Drug Administration www.fda.gov	(888) 463-6332
GSA	General Services Administration www.gsa.gov	(800) 488-3111
HUD	Department of Housing and Urban Development www.hud.gov	(202) 708-1112
LBL	Lawrence Berkeley National Laboratory www.lbl.gov	(510) 486-4000
NCHRP	National Cooperative Highway Research Program (See TRB)	
NIST	National Institute of Standards and Technology www.nist.gov	(301) 975-6478
OSHA	Occupational Safety & Health Administration www.osha.gov	(800) 321-6742 (202) 693-1999
PBS	Public Building Service (See GSA)	
PHS	Office of Public Health and Science www.osophs.dhhs.gov/ophs	(202) 690-7694
RUS	Rural Utilities Service (See USDA)	(202) 720-9540
SD	State Department www.state.gov	(202) 647-4000
TRB	Transportation Research Board www.nas.edu/trb	(202) 334-2934
USDA	Department of Agriculture www.usda.gov	(202) 720-2791
USPS	Postal Service www.usps.com	(202) 268-2000

2.0 PRODUCTS - NOT USED

3.0 EXECUTION - NOT USED

END OF SECTION 01 42 00

SECTION 01 45 00 QUALITY CONTROL

1.0 GENERAL

1.1 DESCRIPTION

A. The Contractor shall provide and maintain an effective Contractor Quality Control (CQC) program and perform sufficient inspections and tests of all items of work, including those of Subcontractors, to ensure compliance with Contract Documents. Include surveillance and tests specified in the technical sections of the Specifications. Furnish appropriate facilities, instruments, and testing devices required for performance of the quality control function. Controls must be adequate to cover construction operations and be keyed to the construction sequence. Construction shall not begin until the Owner has approved the CQC program.

1.2 CONTROL OF ON-SITE CONSTRUCTION

A. Include a control system for the following phases of inspection:

1. Pre-Installation Meeting. For all sections where pre-installations are defined, the Contractor shall arrange for a pre-installation meeting. When practical, pre-installation meetings shall be scheduled to take place on the same day as regularly schedule progress meetings. The Contractor shall make available, during this meeting, all approved submittals and products.

   a. Agenda to include the following:

      i. Appointment

      ii. Appointment of official representatives of participants in the Project.

      iii. Review of existing conditions and affected work, and testing thereof as required.

      iv. Review of installation procedures and requirements.

      v. Review of environmental and site condition requirements.

      vi. Schedule of the applicable portions of the Work.

      vii. Schedule of submission of samples, color chips, and items for Owners consideration.

      viii. Requirements for temporary facilities, site sign, offices, storage sheds, utilities, fences, Section 01500.

      ix. Requirements for notification for reviews. Allow a minimum of 48 hour notice to Architect for review of the Work.

x. Requirements for inspections and tests, as applicable. Schedule and undertake inspections and tests in accordance with Section 01410.

xi. Delivery schedule of specified equipment.

xii. Special safety requirements and procedures.

b. The following minimum personnel shall be at the meeting:

i. Project Manager.

ii. Project Field Supervisor

iii. Subcontractor

iv. Architect's Representative

v. Owner's Representative

vi. Commissioning Agent, when applicable

vii. Testing Agency, when applicable

2. Preparatory Inspection. Perform this inspection prior to beginning work on any definable feature of work. Include a review of contract requirements with the supervisors directly responsible for the performance of the work; check to assure that materials, products, and equipment have been tested, submitted, and approved; check to assure that provisions have been made for required control testing; examine the work area to ascertain that preliminary work has been completed; physically examine materials and equipment to assure that they conform to shop drawings and data and that the materials and equipment are on hand.

3. Initial Inspection. Perform this inspection as soon as work commences on a representative portion of a particular feature of workmanship review control testing for compliance with contract requirements.

4. Follow-up Inspections. Perform these inspections on a regular basis to assure continuing compliance with contract requirements until completion of that particular work.

1.3 CONTROL OF OFF-SITE OPERATIONS

A. Perform factory quality control inspections for items fabricated or assembled off-site as opposed to "off-the-shelf" items. The CQC Representative at the fabricating plant shall be responsible for release of the fabricated items for shipment to the job site. The CQC Representative at the job site shall receive the item and note any damage incurred during shipment. The Contractor shall be responsible for protecting and maintaining the item in good condition throughout the period of on-site and during erection or installation. Although any item found to be faulty may be rejected before its use, final acceptance of an item by the Owner is based on its satisfactory incorporation into the work and acceptance of the completed project.

1.4 TESTING

A. The Owner may engage the services of an independent testing laboratory to confirm that an installed item or element of work conforms to the Specification and workmanship requirements.

1.5 OWNER'S REPRESENTATIVE

A. The Owner shall designate a Representative to monitor the progress and execution of the work. The Representative shall have the authority to call for test samples, to approve or to reject work performed and to stop work in progress, if, in its opinion, the work is not in conformance with the Contract Documents. The Representative shall not be authorized to make changes or interpretations of the Contract Documents.

1. The Contractor shall maintain a project Deficiency/Issues Log in e-Builder to track non-conforming materials or sub-standard workmanship identified by Owner's Representative.

2.0 PRODUCTS – NOT USED

3.0 EXECUTION – NOT USED

*****END OF SECTION 01 45 00*****

SECTION 01 50 00 TEMPORARY FACILITIES AND CONTROLS

1.0 GENERAL

1.1 DESCRIPTION

A. The Contractor shall furnish, install and maintain all temporary facilities and services of every kind, as required by the Contractor and by its subcontractors for their performance of the Work and compliance with the Contract Documents, and shall remove such facilities and complete such services upon the completion of all other work, or as Cornell University may direct.

B. The Contractor shall obtain all required permits and approvals for and shall provide, construct, or install, as well as operate, maintain, service and remove temporary facilities and services.

1.2 REQUIREMENTS OF REGULATORY AGENCIES

A. Comply with Federal, State and local codes and safety regulations.

2.0 PRODUCTS

2.1 MATERIALS, GENERAL

A. Choice of materials, as suitable for the accomplishment of the intended purpose, is the Contractor's option.

B. Materials may be new or used, but must not violate requirements of applicable codes, standards and specifications.

2.2 TEMPORARY FIRST AID FACILITIES

A. Provide first aid equipment and supplies, with qualified personnel continuously available to render first aid at the site.

B. Provide a sign, posted at the telephone, listing the telephone numbers for emergency medical services: Physicians, ambulance services and hospitals.

2.3 TEMPORARY FIRE PROTECTION

A. Provide a fire protection and prevention program for employees and personnel at the site. Any fire watches as a result of construction operations are the responsibility of the Contractor. Comply with NFPA 241. Develop, manage, and supervise an overall fire-prevention and -protection program for personnel at Project site. Review needs with local fire department and establish procedures to be followed. Instruct personnel in methods and procedures. Post warnings and information.

1. Impairments "Fire Code of NYS Section 901.7". Impairment; "the removal of fire alarm devices or sprinkler system coverage in a building." There are two different levels of impairments

   a. Partial Impairment. The removal of fire alarm devices or sprinkler system coverage via control valve in the immediate area of where work is to be performed.

      - Basic Impairment Notification will be sent to Local Authority Having Jurisdiction and FM Global.

      - No fire watch will be required in most cases.

   b. Full System Impairment. The complete removal of a fire alarm "system" or sprinkler "system". Impairment of both the fire alarm system and sprinkler system at the same time is not allowed.

      - Full System Impairment Notification will be sent to local Authority Having Jurisdiction, FM Global, Ithaca Fire Department Officers, Building Manager, Maintenance Manager, and Customer Service.

      - Fire Watch will be required and will need the Fire Watch Person's name and contact information. Cornell EH&S does not perform the fire watch, it is the responsibility of the Contractor.

B. Equipment:

1. Provide and maintain fire extinguishing equipment ready for instant use at all areas of the Project and at specific areas of critical fire hazard.

2. Hand extinguishers of the types and sizes recommended by the National Board of Fire Underwriters to control fires from particular hazards.

3. Construction period use of permanent fire protection system.

4. Water hoses connected to an adequate water pressure and supply system to reach each area or level of construction upon building enclosure or heating of the building.

5. Maintain existing standpipes and hoses for fire protection. Provide additional temporary hoses where required to comply with requirements. Hang hoses with a warning sign stating that hoses are for fire-protection purposes only and are not to be removed. Match hose size with outlet size and equip with suitable nozzles. Provide hoses of sufficient length to protect construction areas.

6. Maintain unobstructed access to fire extinguishers, fire hydrants, siamese connections, standpipes, temporary fire-protection facilities, stairways, and other access routes for firefighting.

7. Where existing or temporary fire protection services are being replaced with new fire protection services, do not remove or impair existing or temporary services until new services are placed into operation and use.

8. At earliest feasible date in each area of Project, complete installation of permanent fire-protection facility and systems, including connected services, and place into operation and use. Instruct key personnel on use of facilities. Protect and maintain permanent fire protection system. Repair or replace any components damaged during construction.

C. Enforce fire-safety discipline:

1. Store combustible and volatile materials in an isolated, protected location.

2. Avoid accumulations of flammable debris and waste in or about the Project.

3. Prohibit smoking in the vicinity of hazardous conditions.

4. There is NO SMOKING allowed on construction sites located in any occupied building. Smoking is prohibited in all Cornell University buildings.

5. Closely supervise welding and torch-cutting operations in the vicinity of combustible materials and volatile conditions.

6. Supervise locations and operations of portable heating units and fuel.

D. Maintain fire extinguishing equipment in working condition, with current inspection certificate attached to each extinguisher.

E. Welding or burning operations shall be conducted under a Hot Work Permit issued in accordance with Section 01 41 00. Where such work is permitted, the Contractor shall provide an approved fire extinguisher in good operating condition within easy reach of the operating personnel. In each instance, obtain prior approval of Cornell University Environmental Health & Safety.

F. Advise Cornell University Environmental Health & Safety of any items affecting Life Safety, e.g., road blockages, exit closing, etc.

2.4 CONSTRUCTION AIDS

A. Provide construction aids and equipment required to assure safety for personnel and to facilitate the execution of the Work; Scaffolds, staging, ladders, stairs, ramps, runways, platforms, railings, hoists, cranes, chutes, fall protection, harness, tie-off points, and other such equipment.

B. When permanent stair framing is in place, provide temporary treads, platforms and railings, for use by construction personnel.

C. Maintain all equipment in a safe condition.

2.5 SUPPORTS

A. The Contractor shall include cost of all materials and labor necessary to provide all supports, beams, angles, hangers, rods, bases, braces, etc. to properly support the Contract Work. All supports, etc. shall meet the approval of the Architect.

B. Any and all supports that are of "custom" fabrication or installation shall be designed by the Contractor's NYS licensed PE with stamped & signed shop drawings and calculations provided for same.

2.6 TEMPORARY ENCLOSURES

A. Provide temporary weather-tight enclosure for building exterior, maintain in-place until installation of permanent enclosures. Provide temporary weather-tight enclosure of exterior walls as work progresses for protection of construction, in progress and completed, from exposure, foul weather, other construction operations, and similar activities, and as necessary to provide acceptable working conditions, provide weather protection for interior materials, provide weather protection for occupied areas, allow for effective temporary heating, and to prevent entry of unauthorized persons.

1. Provide temporary exterior doors with self-closing hardware and padlocks or locksets.

2. Other enclosures shall be removable as necessary for work and for handling of materials.

3. Where heating or cooling is needed and permanent enclosure is incomplete, insulate temporary enclosures.

4. Coordinate enclosure with ventilation requirements, material drying or curing requirements, and specified environmental limitations to avoid dangerous or detrimental conditions and effects.

B. Provide temporary enclosures to separate work areas from areas of the existing building occupied by Owner; to prevent penetration of dust or moisture into occupied areas, to prevent damage to existing equipment, and to protect Owner's employees and operations from construction work.

1. Temporary partition and ceiling enclosures: Framing and sheet materials which comply with structural and fire rating requirements of applicable codes and standards.

a. Close joints between sheet materials, and seal edges and intersections with existing surfaces, to prevent penetration of dust or moisture.

b. In locations where fire protection is required, paint both sides of partitions and ceilings with fire-retardant paint as required by local fire regulations.

2. Do not remove existing exterior enclosure systems until new exterior enclosure systems are ready for installation. Complete removal of existing exterior enclosure systems as soon as possible. Immediately after completing removal, install new exterior enclosure systems and complete installation as soon as possible.

3. Do not remove existing HVAC systems connected to louvers at existing exterior enclosure systems until new HVAC systems and louvers at exterior enclosure systems are ready for installation. Complete removal of existing HVAC systems and louvers as soon as possible. Immediately after completing removal, install new HVAC systems and new louvers and complete installation as soon as possible.

2.7 TEMPORARY WATER CONTROL

A. The Contractor shall provide, maintain and operate pumps required to keep the Work free of water at all times.

B. Dispose of all water with due care and shall not infringe on the rights of others on the Site, of adjacent property owners and of the public. All cost in connection with the removal of such water shall be paid by the Contractor.

2.8 TREE, PLANT AND LAWN PROTECTION

A. Preserve and protect existing trees, plants and lawns at the site which are designated to remain, and those adjacent to the site.

B. Consult with Owner, and remove agreed-on roots and branches which interfere with construction.

1. Employ certified arborist to remove, and to treat cuts.

C. Provide temporary fences to a height of six feet, around each, or around each group of trees and plants. Provide temporary lawn protection to prevent soil compaction. Reference Cornell University Design Standards and Details for wood and chain fencing below.

D. Protect root zones of trees, plants and lawn areas:

1. Do not allow vehicular traffic or parking.

2. Do not store materials or products.

3. Prevent dumping of refuse or chemically injurious materials or liquids.

4. Prevent puddling or continuous running water.

E. Carefully supervise excavating, grading and filling, and subsequent construction operations to prevent damage.

F. Replace, or suitably repair, trees, plants and lawn areas designated to remain which are damaged or destroyed due to construction operations.

G. Roots 2 inches or larger that are damaged or cut during construction are to be sawed off close to the tree side of the excavation by certified arborist.

H. During the leafing-out period in the spring, extra care should be exercised to reduce root damage such as keeping exposed roots wet, saturating soil when backfilling around roots, and backfilling as soon as possible.

I. Consult Cornell University Grounds Department for mitigation of root or tree damage.

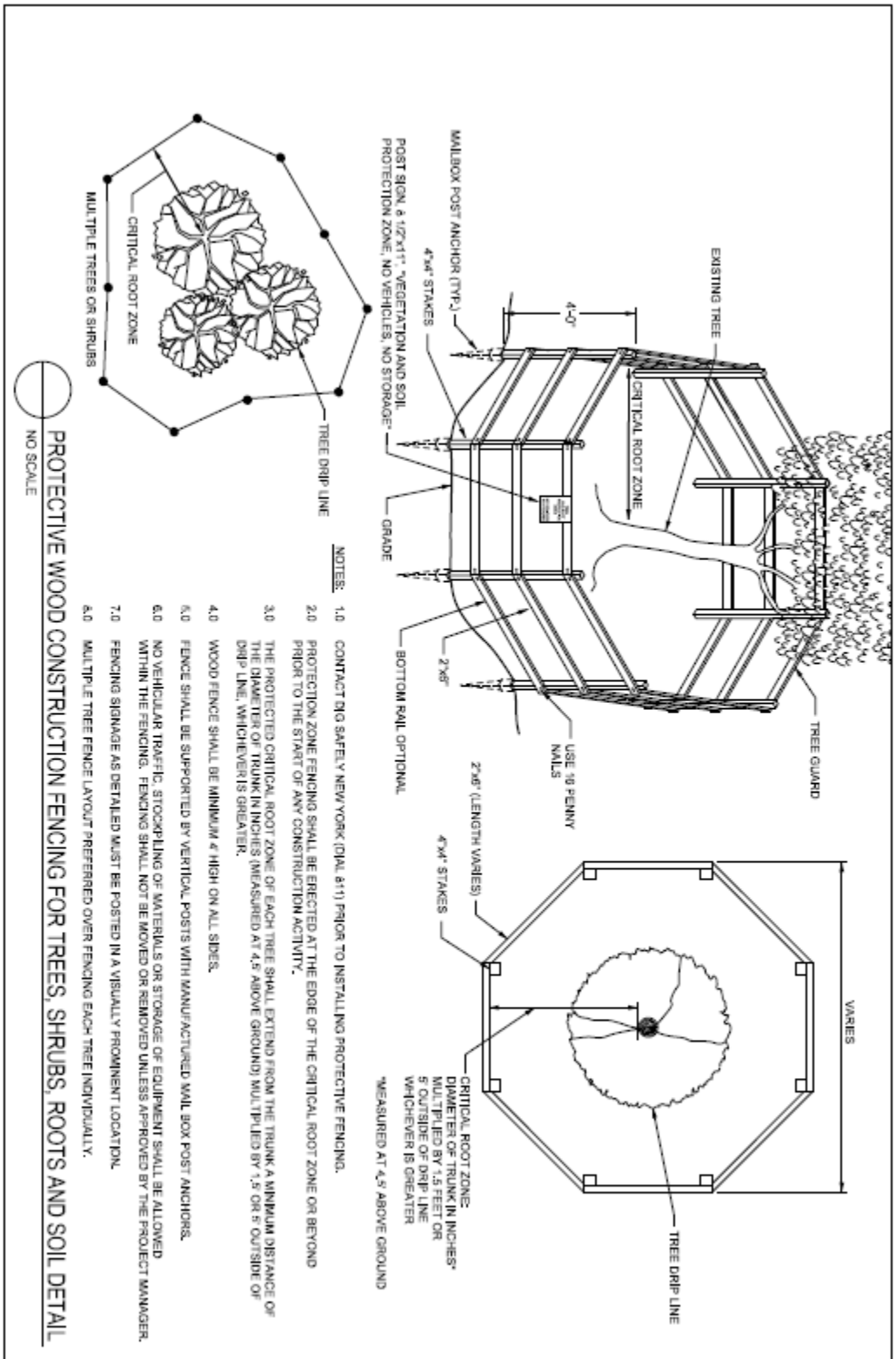
EXISTING TREE
TREE GUARD
4'-0"
CRITICAL ROOT ZONE
MAILBOX POST ANCHOR (TYP.)
4"x4" STAKES
USE 16 PENNY NAILS
POST SIGN, 8 1/2"x11" "VEGETATION AND SOIL PROTECTION ZONE, NO VEHICLES, NO STORAGE"
2"x6" (LENGTH VARIES)
4"x4" STAKES
GRADE
BOTTOM RAIL OPTIONAL
VARIES
CRITICAL ROOT ZONE: DIAMETER OF TRUNK IN INCHES* MULTIPLIED BY 1.5 FEET OR 5' OUTSIDE OF DRIP LINE WHICHEVER IS GREATER
*MEASURED AT 4.5' ABOVE GROUND
TREE DRIP LINE
TREE DRIP LINE
CRITICAL ROOT ZONE
MULTIPLE TREES OR SHRUBS
NOTES:
1.0 CONTACT DIG SAFELY NEW YORK (DIAL 811) PRIOR TO INSTALLING PROTECTIVE FENCING.
2.0 PROTECTION ZONE FENCING SHALL BE ERECTED AT THE EDGE OF THE CRITICAL ROOT ZONE OR BEYOND PRIOR TO THE START OF ANY CONSTRUCTION ACTIVITY.
3.0 THE PROTECTED CRITICAL ROOT ZONE OF EACH TREE SHALL EXTEND FROM THE TRUNK A MINIMUM DISTANCE OF THE DIAMETER OF TRUNK IN INCHES (MEASURED AT 4.5' ABOVE GROUND) MULTIPLIED BY 1.5' OR 5' OUTSIDE OF DRIP LINE, WHICHEVER IS GREATER.
4.0 WOOD FENCE SHALL BE MINIMUM 4' HIGH ON ALL SIDES.
5.0 FENCE SHALL BE SUPPORTED BY VERTICAL POSTS WITH MANUFACTURED MAIL BOX POST ANCHORS.
6.0 NO VEHICULAR TRAFFIC, STOCKPILING OF MATERIALS OR STORAGE OF EQUIPMENT SHALL BE ALLOWED WITHIN THE FENCING. FENCING SHALL NOT BE MOVED OR REMOVED UNLESS APPROVED BY THE PROJECT MANAGER.
7.0 FENCING SIGNAGE AS DETAILED MUST BE POSTED IN A VISUALLY PROMINENT LOCATION.
8.0 MULTIPLE TREE FENCE LAYOUT PREFERRED OVER FENCING EACH TREE INDIVIDUALLY.
PROTECTIVE WOOD CONSTRUCTION FENCING FOR TREES, SHRUBS, ROOTS AND SOIL DETAIL
NO SCALE
DESIGN and CONSTRUCTION STANDARD
CORNELL UNIVERSITY
REVIEWED BY: JT
DATE: 6/30/2017
REVISED BY: BC
DATE: 2/16/2017
CELL LIBRARY
CIVIL_STD_DET
CELL NAME
MHTREE
DOC PRINT SIZE: 11x17
DETAIL NO. 1.8.11

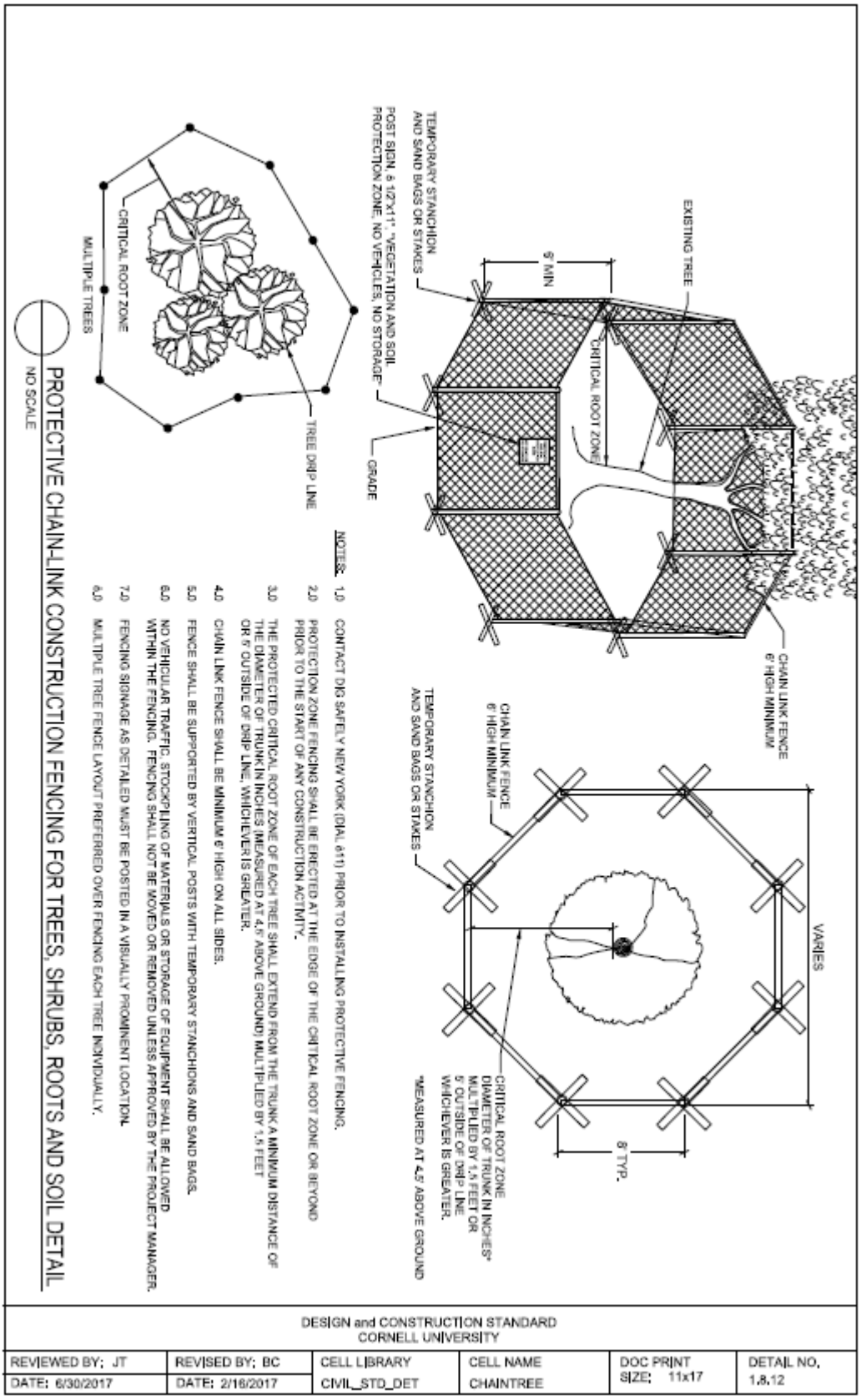
EXISTING TREE
CHAIN LINK FENCE
6' HIGH MINIMUM
TEMPORARY STANCHION
AND SAND BAGS OR STAKES
POST SIGN, 8 1/2"x11", "VEGETATION AND SOIL
PROTECTION ZONE, NO VEHICLES, NO STORAGE"
9' MIN
CRITICAL ROOT ZONE
GRADE
TREE DRIP LINE
CRITICAL ROOT ZONE
MULTIPLE TREES
VARIES
8' TYP.
CRITICAL ROOT ZONE
DIAMETER OF TRUNK IN INCHES*
MULTIPLIED BY 1.5 FEET OR
5' OUTSIDE OF DRIP LINE
WHICHEVER IS GREATER.
*MEASURED AT 4.5' ABOVE GROUND
NOTES:
1.0 CONTACT DIG SAFELY NEW YORK (DIAL 811) PRIOR TO INSTALLING PROTECTIVE FENCING.
2.0 PROTECTION ZONE FENCING SHALL BE ERECTED AT THE EDGE OF THE CRITICAL ROOT ZONE OR BEYOND PRIOR TO THE START OF ANY CONSTRUCTION ACTIVITY.
3.0 THE PROTECTED CRITICAL ROOT ZONE OF EACH TREE SHALL EXTEND FROM THE TRUNK A MINIMUM DISTANCE OF THE DIAMETER OF TRUNK IN INCHES (MEASURED AT 4.5' ABOVE GROUND) MULTIPLIED BY 1.5 FEET OR 5' OUTSIDE OF DRIP LINE, WHICHEVER IS GREATER.
4.0 CHAIN LINK FENCE SHALL BE MINIMUM 6' HIGH ON ALL SIDES.
5.0 FENCE SHALL BE SUPPORTED BY VERTICAL POSTS WITH TEMPORARY STANCHIONS AND SAND BAGS.
6.0 NO VEHICULAR TRAFFIC, STOCKPILING OF MATERIALS OR STORAGE OF EQUIPMENT SHALL BE ALLOWED WITHIN THE FENCING. FENCING SHALL NOT BE MOVED OR REMOVED UNLESS APPROVED BY THE PROJECT MANAGER.
7.0 FENCING SIGNAGE AS DETAILED MUST BE POSTED IN A VISUALLY PROMINENT LOCATION.
8.0 MULTIPLE TREE FENCE LAYOUT PREFERRED OVER FENCING EACH TREE INDIVIDUALLY.
PROTECTIVE CHAIN-LINK CONSTRUCTION FENCING FOR TREES, SHRUBS, ROOTS AND SOIL DETAIL
NO SCALE
DESIGN and CONSTRUCTION STANDARD
CORNELL UNIVERSITY
REVIEWED BY: JT
DATE: 6/30/2017
REVISED BY: BC
DATE: 2/16/2017
CELL LIBRARY
CIVIL_STD_DET
CELL NAME
CHAINTREE
DOC PRINT SIZE: 11x17
DETAIL NO. 1.8.12

2.9 PERSONNEL, PUBLIC AND EMPLOYEE PROTECTION

A. Provide guardrails, barricades, fences, footways, tunnels and other devices necessary to protect all personnel, employees, and the public, against hazards on, adjacent to or accessing the construction site.

1. Provide signs, warning lights, signals, flags and illumination as necessary to alert persons to hazards and to provide safe, adequate visibility in areas of hazards.

2. Closed sidewalks need to be indicated with OSHA-approved signs, as well as, proper barricades.

3. Provide flag personnel as necessary to guide vehicles, protect personnel, public and employees.

2.10 ACCESS ROADS AND PARKING AREAS

A. Provide adequate temporary roads and walks to achieve all-weather access into the site from public thoroughfares, and within and adjacent to the site as necessary to provide uninterrupted access to field offices, work and storage areas.

B. Grade and provide drainage facilities to assure runoff of rainwater and to avoid blockage of flow from adjacent areas.

C. During dry weather wet down temporary unpaved areas when necessary to prevent blowing dust.

2.11 PROJECT IDENTIFICATION AND SIGNS

A. No Contractor signs to be displayed at the project site, unless authorized by the Owner.

B. Owner Construction Project Sign. The Contractor shall install Owner provided project identification signage.

2.12 SECURITY

A. The Contractor shall provide security services as required to protect the interests of the Owner.

2.13 FIELD OFFICES

A. The Owner shall designate a space within the Complex to serve as a field office for the use of the Contractor and Owner.

3.0 EXECUTION

3.1 PREPARATION

A. Consult with Owner, review site conditions and factors which affect construction procedures and temporary facilities, including adjacent properties and public facilities which may be affected by execution of the work.

1. Designate the locations and extent of temporary construction, storage, and other temporary facilities and controls required for the expeditious accomplishment of the Work.

2. Allow space for use of the site by Owner and by other contractors, as required by Contract Documents.

3.2 GENERAL

A. Comply with applicable requirements specified in sections of Division 02 through 40.

B. Make work structurally, mechanically and electrically sound throughout.

C. Install work in a neat and orderly manner.

D. Maintain, clean, service and repair facilities to provide continuous usage, and to the quality specified for the original installation.

E. Relocate facilities as required by progress of construction, by storage or work requirements, and to accommodate requirements of Owner and other contractors employed at the site.

F. Keep the site, at all times during the progress of the Work, free from accumulation of waste matter or rubbish and shall confine its apparatus, materials and operations of its workers to the limits prescribed except as the latter may be extended with the approval of the Owner's Representative. Cleaning of the structure or structures must be performed daily and removal of waste matter or rubbish must be performed at least once a week.

G. Contractor shall at all times keep access road and public roads clean of mud and construction debris and maintain dust control to the satisfaction of the Owner.

3.3 REMOVAL

A. Completely remove temporary structures, materials, equipment and services:

1. When construction needs can be met by use of permanent construction.

2. At completion of the Project.

B. Repair damage caused by installation or use of temporary facilities. Clean after removal.

C. Restore existing or permanent facilities used for temporary purposes to specified, or to original condition.

1. Remove foundations and underground installations for temporary construction and utilities.

2. Grade the areas of the site affected by temporary installations to required elevations and slopes, and clean the area.

*****END OF SECTION 01 50 00*****

SECTION 01 51 00 TEMPORARY UTILITIES

1.0 GENERAL

1.1 DESCRIPTION

A. The Contractor shall furnish, install and maintain temporary utilities required by all trades for construction. Remove on completion of Work.

B. The Contractor shall provide all labor and materials for temporary connections and distribution.

1.2 REQUIREMENTS OF REGULATORY AGENCIES

A. Comply with National Electric Code, current edition.

B. Comply with Federal, State and local codes and safety regulations and with utility company requirements.

2.0 PRODUCTS

2.1 MATERIALS, GENERAL

A. Materials may be new or used, but must be adequate in capacity for the required usage, must not create unsafe conditions, and must not violate requirements of applicable codes and standards.

2.2 TEMPORARY ELECTRICITY, LIGHTING AND WATER

A. The Contractor shall have access to the Owner's water and electric power for constructing the Work. Temporary utility connections shall be made by the Contractor as close to its operations as possible as long as such connections do not over-load the capacity of the Owner's utilities or interfere with its customary utilization thereof. Utility access points shall be determined in cooperation with and acceptable to the Owner.

B. The Contractor shall be responsible for the economic use of the Owner's Water and Power. The Owner will pay for the water and power consumed in the construction of the Work as long as economical usage of these utilities is maintained. The Owner reserves the right to meter and charge for the power and water consumed if in the opinion of the Owner the usage of these utilities is not economically conducted by the Contractor. In such an event, the Owner shall give three (3) days written notice to the Contractor of its intentions to meter and charge for temporary utilities used by the Contractor.

C. All temporary power systems including wiring shall be removed by the Contractor when no longer required.

D. The minimum temporary lighting to be provided is at the rate of fifty foot candles, is to be maintained in each room and changed as required when interior walls are being erected. The required temporary lighting must be maintained for twenty-four (24) hours a day and seven (7) days a week at all stair levels and in all corridors below ground; in any and all egress; in all other spaces temporary lighting is to be maintained only during working hours. All temporary wiring and equipment shall be in conformity with the National Electric Code.

E. The minimum temporary outdoor security lighting to be provided is as follows:

1. Along the perimeter of the site fence, consisting of vandal-resistant light fixtures with HID lamps, located 150 foot center, mounted on the inside of the construction fence.

2. Lighting for temporary pedestrian paths and roadways, to provide a minimum of 0.1 foot-candle on the path of travel.

F. Three-phase temporary power circuits shall be installed as required to operate construction equipment of the various trades and to install and test equipment such as pumps and elevators. The Contractor shall install and maintain temporary or permanent service for the permanently installed building equipment such as sump pumps, boilers, boiler controls, fans, pumps, so that such equipment may be operated when required and so ordered by the Owner's Representative for drainage or for temporary heat.

G. Except as otherwise provided in the Contract, the Contractor shall submit to the Owner or the Owner's Representative for approval a proposed schedule of all utility shutdowns and cutovers of all types which may be required in connection with the Work. Such schedule shall provide a minimum of four (4) weeks advance notice to the Owner prior to the time of the proposed shutdown and cutover. The Contractor shall be responsible for all charges relating to shutdowns.

H. Discontinuance, Changes and Removal

The Contractor shall:

1. Discontinue all temporary services required by the Contract when so directed by the Owner or the Owner's Representative. The discontinuance of any such temporary service prior to the completion of the Work shall not render the Owner liable for any additional cost entailed thereby.

2. Remove and relocate such temporary facilities as directed by the Owner or the Owner's Representative, and shall restore the Site and the Work to a condition satisfactory to the Owner.

2.3 TEMPORARY USE OF ELEVATOR

A. Use of Existing Elevator

1. If the Contractor elects to use the existing elevator equipment, the Contractor shall:

a. Provide adequate protection for such equipment and shall operate such equipment within a capacity not to exceed that allowed by law, rule or regulation.

b. Provide for the maintenance and cleaning of the elevator equipment as approved by the Owner's Representative.

c. Prior to start of construction, accurately record the condition of the existing elevator. Promptly repair or replace items that are damaged as a result of Contractor's use. Service calls that arise as a result of Contractor misuse will be charged to the Contractor. At Substantial Completion, restore elevators to condition existing before initial use.

d. Use only elevators designated by Owner's Representative at dates and times designated by Owner's Representative. Dates and times available for Contractor's use shall be scheduled with, and at the convenience of, the Owner, and may vary during the course of the Project.

e. Owner will not provide elevator operators or other monitoring of elevator use.

f. Do not load elevators beyond their rated weight capacity.

g. Provide code compliant protective coverings, barriers, devices, signs, or other procedures to protect elevator car and entrance doors and frame. If, despite such protection, elevators become damaged, engage elevator maintenance contractor to restore damaged work so no evidence remains of correction work. Return items that cannot be refinished in field to the shop, make required repairs and refinish entire unit, or provide new units as required.

h. Procure and coordinate the elevator maintenance contractor to gain access to the elevator shaft as required to complete the work

2.4 TEMPORARY HEAT AND VENTILATION

A. The Contractor shall furnish temporary heat as may be necessary for constructing the Work.

B. The Contractor will be permitted to use the building's permanent heating system for temporary heat. Permission to use the building's permanent heating system shall in no way constitute the Owner's acceptance of that portion of the Work.

C. When using the permanent building systems for space conditioning, provide a written maintenance plan for acceptance by the Owner's Representative, prior to utilizing the equipment. Plan to address temporary filtering of air and water, sealing of open ducts, lubrication, operation outside of normal ranges, and controls/safeties. Return all equipment to its newly installed condition prior to acceptance testing.

1. If the Contractor elects to use the building's permanent heating system for temporary heat, the Contractor shall provide filters with a minimum MERV of 8 at each return-air grille in system, maintain to keep them free of dust and debris, replace if necessary and remove at end of construction and clean HVAC system as required in Section 01 77 00 – Project Closeout.

D. Any temporary system shall be removed when no longer required.

E. During heating cycles the enclosures separating the interior building areas from outside shall be maintained closed to conserve heat energy.

F. The Contractor shall provide for ventilation of all structures until Physical Completion of the Work and shall control such ventilation to avoid excessive moisture levels and rates of drying of construction materials, including but not limited to concrete and to plaster, and to prevent condensation on sensitive surfaces. The Contractor shall be responsible for any moisture intrusion that is detrimental to the Project.

2.5 TEMPORARY CONTRACTOR TELEPHONE SERVICE

A. Site Superintendent or their Representative shall carry a cellular telephone at all times.

B. Provide phone number to Cornell project representatives for communication during Work.

2.6 TEMPORARY SANITARY FACILITIES

A. The Owner shall designate sanitary facilities to be utilized by the Contractor during construction. The Contractor shall maintain neat, clean and sanitary conditions. The Contractor shall be responsible for costs associated with excessive custodial services associated with such usage.

3.0 EXECUTION

3.1 REMOVAL

A. Completely remove temporary materials and equipment when their use is no longer required.

B. Clean and repair damage caused by temporary installations or use of temporary facilities.

C. Restore existing and permanent facilities used for temporary services to specified, or to original, condition.

*****END OF SECTION 01 51 00*****

SECTION 01 66 00 STORAGE AND PROTECTION

1.0 GENERAL

1.1 DESCRIPTION

A. Receive, pile, store and handle all materials, equipment and other items incorporated or to be incorporated in the Work, including items furnished by the Owner in a careful and prudent manner and shall protect them against loss or damage from every source.

B. Obscure from public view, in a manner acceptable to the Owner, staging and storage areas.

1.2 TRANSPORTATION AND HANDLING

A. Transport and handle products in accordance with manufacturer's instructions; using means and methods that will prevent damage, deterioration, and loss, including theft.

B. Schedule delivery to minimize long-term storage at Project site and to prevent overcrowding of construction space.

C. Coordinate delivery with installation time to ensure minimum holding time for items that are flammable, hazardous, easily damaged, or sensitive to deterioration, theft, and other losses.

D. Deliver products to Project site in an undamaged condition in manufacturer's original sealed container or other packaging system, complete with labels and instructions for handling, storing, unpacking, protecting, and installation.

E. Promptly inspect shipments to assure that products comply with requirements, quantities are correct and products are undamaged.

F. Provide equipment and personnel to handle products by methods to prevent soiling, disfigurement or damage.

1.3 ON-SITE STORAGE

A. Materials stored on the Site shall be neatly piled and protected, and shall be stored in a neat and orderly manner in locations that shall not interfere with the progress of the Work or with the daily functioning of the Institution.

B. Materials subject to weather damage shall be protected against the weather by floored weatherproof temporary storage sheds.

C. Comply with product manufacturer's written instructions for temperature, humidity, ventilation, and weather-protection requirements for storage.

D. Storage piles and sheds shall be located within the area designated as the Staging Area. The Contractor shall work to insure that the condition of the staging area has no negative impact

on the Campus, visually or otherwise; and that outside of that area. The Contractor has no impact at all on the Campus.

E. Materials stored within the building shall be distributed in such a manner as to avoid overloading of the structural frame, and never shall be concentrated in such a manner as to exceed the equivalent of 50 pounds per square foot uniformly distributed loading. Stored materials shall be moved if they interfere with the progress of the work.

F. Should it become necessary during the course of the Work to move stored materials or equipment, the Contractor, at the direction of the Owner or the Owner's Representative, shall move such materials or equipment.

1.4 CAMPUS SITE / PALM ROAD STORAGE

A. All property including construction materials and equipment stored at the Palm Road or other Campus site, shall be stored at the Contractor's sole risk. The Contractor is solely responsible for repair or replacement of property due to any cause of loss. Due to work at the Palm Road lot, staging space is limited and not guaranteed to be provided. If staging space is needed, a request should be submitted to the Project Manager.

B. The Contractor agrees to hold Cornell harmless from any accident or injury occurring at Palm Road storage or other assigned Campus site associated with the Contractor's storage.

C. The Contractor understands that Cornell makes "no" warranty regarding any security at the Palm Road or other assigned Campus site.

D. The Contractor agrees that it is solely responsible for any cleanup of any site contamination caused by the Contractor's storage or storage operations and the Contractor agrees to pay for cleanup of any contamination and restore the site back to the same condition it was found.

E. It shall be assumed that the Contractor is responsible for site contamination unless the Contractor has reported condition prior to moving storage materials and equipment onto the site. Each Contractor shall be responsible for their own general area whether defined formally or not but in cases where pollutants have traveled or are found in the public areas used by all contractors, the Contractor agrees as follows:

1. If it cannot be determined who is responsible for site contamination after an investigation, all contractors who could be responsible based upon location of the incident agree to share the expense of cleanup equally.

F. No storage of hazardous materials or environmental contaminants is permitted at the Palm Road or any Campus site. All barrels must have labels affixed identifying contents.

G. The Contractor will be responsible for securing and maintaining any Campus site area designated to them. All contractor trailers or storage containers located on Cornell Campus Property will need to file for a building permit with the Town of Ithaca. If the trailer/container is there longer than 180 days, the trailer/container will need to meet the Building Code requirements of a permanent structure. The trailer/container will need a means of egress that can be operated from the inside and a fire extinguisher. The contractor will also need to file for a demolition permit when the trailer/container is removed

H. Unoccupied storage containers not within the project fence shall be labeled in the Cornell standard. Signs customized for the project shall be ordered from Ithaca Plastics, Inc., 305 West Green Street, Ithaca, New York 14850, Phone - 607.272.8232, Fax - 607.277.2579, Email – db@ithacaplastics.com.

1.5 PROTECTION

A. The Contractor shall provide security personnel and adopt other security measures as may be necessary to adequately protect materials and equipment stored at the site. The Contractor shall be obligated to replace or pay for all materials and equipment including items furnished by the Owner which have been damaged or stolen prior to completion of the Work.

B. Protection of Utilities

1. If during the course of the Project, it is necessary to work adjacent to existing utilities, pipelines, structures and equipment, the Contractor shall take all necessary precautions to protect existing facilities from damage.

2. Locations of utilities as shown on the Contract Documents are approximate only. The Contractor shall excavate or otherwise locate to verify existing utilities in advance of its operation.

C. Protective Covering

1. All finished surfaces shall be protected by the Contractor as follows:

a. Door and window sills and the jambs and soffits of openings used as passageways or through which material is handled, shall be cased and protected adequately against possible damage resulting from the conduct of the work of all trades.

b. All surfaces shall be clean and not marred upon delivery of the building to the Owner. The Contractor shall, without extra compensation, replace all blocks, gypsum board, plaster, paint, tile, and all other surfaces, whether or not protected, which are damaged, and shall refinish (including painting as specified) to satisfaction of Owner.

c. Tight wood sheathing shall be laid under any materials that are stored on finished concrete surfaces and planking must be laid before moving any materials over these finished areas. Wheelbarrows used over such areas shall have rubber tires on wheels.

d. Contractor has the responsibility for protection of carpeting and all finish flooring during all phases of the work including after installation.

e. All floors exposed to view as a floor finish shall be protected by overlaying with plywood in all areas subject to construction traffic within and without the building, special care shall be taken to protect all stair finish surfaces including but not limited to flooring, wood in-fill stairs, cabinetry, counters, equipment, etc.

2. HVAC ductwork shall be protected by the Contractor as follows to prevent introduction of contaminants:

a. Ductwork with interior lining shall be wrapped at the factory using plastic wrap to exclude moisture and contaminants. The wrapping shall not be removed until immediately prior to installation.

b. Ductwork shall not be exposed to moisture or contaminants at any point in the manufacturing, shipping, storage or installation process.

c. Ductwork shall not be staged or stored outside or otherwise exposed to the weather.

d. Ductwork shall be transported only inside of covered vehicles.

e. Once installed, ductwork shall be protected from contamination during the construction process.

1.6 PROTECTION AFTER INSTALLATION

A. Protect installed products, including Owner-provided products, and control traffic in immediate area to prevent damage from subsequent operations.

B. Provide protective coverings at walls, projections, corners, and jambs, sills, and soffits of openings in and adjacent to traffic areas.

C. Cover walls and floors of elevator cabins, and jambs of cab doors, when elevators are used by construction personnel.

D. Protect finish floors and stairs from dirt, wear, and damage:

1. Secure heavy sheet goods or similar protective materials in place, in areas subject to foot traffic.

2. Lay planking or similar rigid materials in place, in areas subject to movement of heavy objects.

3. Lay planking or similar rigid materials in place, in areas where storage of products will occur.

E. Protect waterproofed and roofed surfaces:

1. Restrict use of surfaces for traffic of any kind, and for storage of products.

2. When an activity is mandatory, obtain recommendations for protection of surfaces from manufacturer. Install protection and remove on completion of activity. Restrict use of adjacent unprotected areas.

F. Restrict traffic of any kind across planted lawn and landscape areas.

2.0 PRODUCTS – NOT USED

3.0 EXECUTION – NOT USED

END OF SECTION 01 66 00

SECTION 01 73 29 CUTTING, PATCHING AND REPAIRING

1.0 GENERAL

1.1 DESCRIPTION

A. The Contractor shall be responsible for all cutting, fitting and patching, including excavation and backfill, required to complete the Work or to:

1. Make its several parts fit together properly.
2. Uncover portions of the Work to provide for installation of ill-timed work.
3. Remove and replace defective work.
4. Remove and replace work not conforming to requirements of Contract Documents.
5. Remove samples of installed work as specified for testing.
6. Repair or restore existing or new surfaces and finishes to match adjacent existing or new surfaces and finishes.

B. Upon written instructions of the Owner's Representative:

1. Uncover designated portions of Work for Architect's observation of covered work.
2. Remove samples of installed materials for testing beyond that specified.
3. Remove work to provide for the alteration of previously incorrectly installed work.
4. Patch work uncovered or removed.

C. Do not damage or endanger any work by cutting or altering the Work or any part thereof.

D. Do not cut or otherwise alter the work of the Owner except with the written consent of the Owner's Representative.

E. Where cutting and patching involves adding reinforcement to structural elements, submit details and engineering calculations showing integration of reinforcement with the original structure.

F. Openings and Chases

1. Build openings, including but not limited to channels, chases and flues as required to complete the Work as set forth in the Contract.
2. After installation and completion of any work for which openings have been provided, build in, over, and around and finish all such openings as required to complete the Work.

3. Furnish and install all sleeves, inserts, hangers and supports required for the execution of the Work.

1.2 SUBMITTALS

A. Submit a written request to the Architect prior to executing any cutting, alteration or excavation which affects the work of the Owner, or which may affect the structural safety of any portion of the Project. Include:

1. Identification of the Project.

2. Description of the affected work.

3. The necessity for doing the cutting, alteration or excavation.

4. The effect on the work of the Owner's property, or on the structural integrity of the Project.

5. Description of the proposed work:

a. The scope of cutting, patching, alteration, or excavation.

b. Contractor and trades who will execute the work.

c. Products proposed to be used.

d. The extent of refinishing to be done.

6. Alternatives to cutting, patching or excavation.

7. Designation of the responsibility for the cost of cutting and patching.

8. Written permission of any separate contractor whose work will be affected.

B. Should conditions of the work or the schedule indicate a change of products from the original installation, submit a request for substitution as specified in Section 01 25 00 - Substitutions and Product Options.

C. Submit a written notice to the Architect and the Owner designating the date and the time the work will be uncovered.

1.3 QUALITY ASSURANCE

A. Requirements for Structural Work: Do not cut and patch structural elements in a manner that would change their load-carrying capacity for load-deflection ratio.

1. Obtain written approval of the cutting and patching proposal before cutting and patching structural elements, including but not limited to the following:

a. Foundation construction

b. Bearing and retaining walls

c. Structural concrete

d. Structural steel and lintels

e. Structural decking

f. Miscellaneous structural metals

g. Exterior wall back-up supports and anchoring systems

h. Piping, ductwork, vessels, and equipment supports

i. Equipment supports

B. Operational Limitations: Do not cut and patch operating elements or related components in a manner that would result in reducing their capacity to perform as intended. Do not cut and patch operating elements or related components in a manner that would result in increased maintenance or decreased operation life or safety.

1. Obtain written approval of the cutting and patching proposal before cutting and patching the following operating elements or safety related systems:

a. Primary operational systems and equipment

b. Air or smoke barriers

c. Water, moisture, or vapor barriers

d. Membranes and flashings

e. Fire protection systems

f. Control systems

g. Communication systems

h. Electrical wiring systems

i. Operating systems of special construction in MEP work

C. Visual Requirements: Do not cut and patch construction exposed on the exterior or in occupied spaces in a manner that would, in the Owner's opinion, reduce the building's aesthetic qualities. Do not cut and patch construction in a manner that would result in visual evidence of cutting and patching. Remove and replace construction which was cut and patched in a visually unsatisfactory manner at no expense to the Owner.

D. Waterproofing and Water Tightness: Do not cut or alter waterproofed walls or floors or any structural members without written permission of the Owner.

1. Waterproofing and Roofing Membranes

a. Employ qualified contractors to accomplish all required cutting, patching, or repairing of existing waterproofing and roofing membranes.

b. Before beginning cutting, patching or repairing of existing waterproofing and roofing membranes, obtain approval of all materials, methods and contractor to be used from the Owner and agency, or agencies, holding bond or guarantee/warranty in force for membrane.

2. Water Tightness

a. The Contractor shall be responsible for water tightness of product, materials, and workmanship, including work specified to be watertight and inferred by general practice to be watertight.

b. All floors (slabs), walls, roof, glazing, windows, doors, sleeves through foundation walls, flashings, and similar items shall be watertight.

c. If details or materials shown or specified are felt not satisfactory to produce water tightness, the Contractor shall inform the Owner's Representative before installation and submit proposed substitution or alternative method for review and approval. The Contractor shall execute approved change and make watertight at no additional cost to the Owner.

1.4 WARRANTIES

A. Replace, patch, and repair material and surfaces cut or damaged by methods and with materials in such a manner as not to void any warranties required or existing.

2.0 PRODUCTS

2.1 MATERIALS

A. Comply with the Contract Documents for each product involved.

B. Use materials identical to in-place or existing materials. For exposed surfaces, use materials that visually match existing adjacent surfaces to the fullest extent possible. If identical materials are unavailable or cannot be used, use materials whose installed performance will equal or surpass that of in-place or existing materials, and will match visual appearance of in-place or existing materials.

3.0 EXECUTION

3.1 INSPECTION

A. Inspect existing conditions of the Project, including elements subject to damage or to movement during:

1. Cutting and patching.

2. Excavation and backfilling.

B. After uncovering work, inspect the conditions affecting the installation of products, or performance of the work.

C. Report unsatisfactory or dubious conditions to the Architect in writing; do not proceed with the work until the Architect has provided further instructions.

3.2 PREPARATION

A. Provide shoring, bracing and other support as necessary to assure the structural safety of that portion of the Work.

B. Provide devices and methods to protect other portions of the Project from damage.

C. Provide for vertical and lateral support required to protect adjacent buildings and properties.

D. Provide protection from the elements for that portion of the Project which may be exposed by cutting and patching work, including but not limited to pumping to maintain excavations free from water.

E. Avoid interference with use of adjoining areas or interruption of free passage to adjoining areas.

F. Avoid cutting existing pipe, conduit, or ductwork serving the building but scheduled to be removed or relocated until provisions have been made to bypass them.

3.3 PERFORMANCE

A. General: Employ skilled workers to perform cutting and patching. Proceed with cutting and patching at the earliest feasible time and complete without delay.

1. Cut existing construction to provide for installation of other components or performance of other construction activities and the subsequent fitting and patching required to restore surfaces to their original condition.

B. Cutting: Cut existing construction using methods which will assure safety, will be least likely to damage elements retained or adjoining construction, and will provide proper surfaces to receive new work.

1. In general, where cutting, use hand or small power tools designed for sawing or grinding, not hammering and chopping. Cut holes and slots as small as possible, neatly to size required, and with minimum disturbance of adjacent surfaces. Temporarily cover openings when not in use.

2. To avoid marring existing finished surfaces, cut or drill from the exposed or finished side into concealed surfaces.

3. Cut through concrete and masonry using a cutting machine, such as a carbon saw or a diamond-core drill.

4. Comply with the requirements of applicable MEP work where cutting and patching of services is required.

C. Patching: Patch with durable seams that are as invisible as possible. Comply with specified tolerances.

1. Where feasible, inspect and test patched areas to demonstrate integrity of the installation.

2. Restore exposed finishes of patched areas and extend finish restoration into retained adjoining construction in a manner that will eliminate evidence of patching and refinishing.

   a. Where patching occurs in a painted surface, apply primer and intermediate paint coats over patch and apply final paint coat over entire unbroken surface containing patch. Provide additional coats until patch blends with adjacent surfaces.

3. Refinish entire surfaces as necessary to provide an even finish to match adjacent finishes:

   a. For continuous surfaces, refinish to nearest intersection.

   b. For an assembly, refinish the entire unit.

4. When patching existing plaster finished walls and partitions, the Contractor shall utilize plaster trim, lath and other metal components to match the integrity of the existing system. All plaster finishes shall match existing finishes so as to provide a uniform visual appearance.

5. Floors and Walls: Where walls or partitions that are demolished extend one finished area into another, patch and repair floor and wall surfaces in the new space. Provide an even surface of uniform finish color, texture, and appearance. Remove existing floor and wall coverings and replace with new materials, if necessary, to achieve uniform color and appearance.

   a. Patch with durable seams that are as invisible as possible. Provide materials and comply with installation requirements specified in other Sections of these Specifications.

6. Ceilings: Patch, repair, or re-hang existing ceilings as necessary to provide an even-plane surface of uniform appearance.

7. Concrete Masonry Units: Patch walls by toothing-in units using salvaged or new CMU units matching in-place units for type and size. Match coursing patterns, mortar joint profiles, and other features of in-place CMU walls. Use accessory materials compatible with in-place materials.

8. Brick and Masonry: Patch walls by toothing-in units using salvaged or new brick and masonry matching in-place brick and masonry units. Match coursing patterns, mortar joint profiles, and other features of in-place brick and masonry walls. Use accessory materials compatible with in-place materials.

9. Exterior Building Enclosure: Patch components in a manner that restores enclosure to a weather-tight condition.

   a. Existing Roofing: Comply with requirements of existing roofing manufacturer for cutting and patching existing roofing system. Provide flashing and trim, base sheets, base flashing, adhesives, insulation, blocking, substrate boards, accessories, and other required items to patch roofing at penetrations and roof-top mounted items.

D. Repairs: Where repairs to existing surfaces are required, patch to produce surfaces suitable for new materials.

   1. Completely fill holes and depressions in existing masonry walls that are to remain with an approved masonry patching material applied according to manufacturer's written recommendations.

E. Execute excavating and backfilling by methods which will assure safety, will prevent settlement or damage to other work.

F. Execute fitting and adjustment of products to provide a finished installation to comply with specified products, functions, tolerances and finishes.

G. Restore work which has been cut or removed; install new products to provide completed work in accordance with requirements of Contract Documents.

H. The Contractor shall replace, repair and patch all surfaces of the ground and of any structure disturbed by its operations and its Work which surfaces and structures are intended to remain even if such operations and work are outside the property lines. Such replacement, repair and patching shall be with like material and shall restore surfaces as they existed.

3.4 CLEANING

A. Clean area and spaces where cutting and patching are performed. Completely remove paint, mortar, oils, putty, and similar items. Thoroughly clean piping, conduit, and similar features before applying paint or other finishing materials. Restore damaged pipe covering to its original condition.

B. Clean adjacent structures and improvements of dust, dirt, and debris caused by selective demolition operations. Return adjacent areas to condition existing before selective demolition operations began.

*****END OF SECTION 01 73 29*****

SECTION 01 77 00 PROJECT CLOSEOUT

1.0 GENERAL

1.1 INSPECTIONS

A. Substantial Completion:

1. Within a minimum of five (5) days prior to substantial completion, when the Work has reached such a point of completion that the building or buildings, equipment and apparatus can be occupied and used for the purpose intended, the Contractor shall conduct a detailed inspection of the Work to ensure that all requirements of the Contract have been met and that the Work is complete and is acceptable. Contractor shall prepare and submit a list of items to be completed and corrected (Contractor's punch list), indicating the value of each item on the list and reasons why the Work is incomplete.

2. After receipt of the Contractor's initial punch list, the Architect will make an inspection of the Work to determine that the Work is substantially complete and that requirements of the Contract have been met and that the Work is sufficiently complete and is acceptable for use. The Architect will submit a marked-up list of items to be completed and/or corrected, inclusive of the Contractor's punch list. The Architect shall prepare a Certificate of Substantial Completion, on the basis of an inspection, when the Architect has determined that the work is substantially complete.

3. A copy of the report of the inspection will be furnished to the Contractor as the inspection progresses so that the Contractor may proceed without delay with any part of the Work found to be incomplete or defective.

4. All work performed under a Fire Protection System Installation/Alteration Operating Permit shall be inspected by the Ithaca Fire Department, or if so delegated by the Ithaca Building Department.

   a. A member of the Ithaca Fire Department shall witness all acceptance or reacceptance testing of work performed under a Fire Protection System Installation Operating Permit. All testing and inspections shall be in compliance with the applicable NFPA codes as referenced by Section 906.1 of the Fire Code of NYS.

   b. Work classified as a 'Repair' under the Existing Building Code does not require the Ithaca Fire Department to witness the testing of the affected systems. Systems that have been repaired must still be tested as required by the Fire Code of NYS and NFPA.

   c. The Ithaca Fire Department Shall Witness the Acceptance or Reacceptance Testing for the Following Conditions:

      - Testing of any new installation of a fire alarm, fire suppression, or fire detection system as required by the Fire Code of New York State.

- Hydrostatic testing of sprinkler system where the modification affects more than twenty (20) sprinkler heads and the modified area can be isolated from the rest of the system

- Installation or replacement of a fire pump or drive elements of the fire pump.

- A Fire Alarm System with added or deleted components.

- A Fire Alarm System where the wiring or control circuits have been modified.

- A Fire Alarm System where the control unit (Fire Alarm Panel) has been replaced or the control unit software has been replaced.

- A smoke control system where the master control unit, individual fan control unit, or fan drive unit has been replaced or modified

- An alternative fire suppression system that has been replaced or the actuation elements have been modified. Except: fusible link replacement.

- A modification or extension of the piping for a fire standpipe system where a hydrostatic test is required by NFPA 14.

B. Final Acceptance:

1. When the items appearing on the report of inspection have been completed or corrected, the Contractor shall so advise the Architect. After receipt of this notification and Contractor's certified list of completed items, the Owner's Representative will inform the Contractor of the date and time of final inspection. A copy of the report of the final inspection containing all remaining contract exceptions, omissions and incomplete work will be furnished to the Contractor.

2. After receipt of notification of completion and all remaining contract exceptions, omissions and incomplete work from the Contractor, the Architect will make an inspection to verify completion of the exception items appearing on the report of final inspection.

1.2 SUBMITTALS

A. Contractor's List of Incomplete Items: Initial punch list submittal at Substantial Completion.

1. Organize list of spaces in sequential order, starting with exterior areas first and proceeding from lowest floor to highest floor, listing by room or space number. Organize items applying to each space by major element, including categories for individual exterior face elevations, ceilings, individual walls, floors, doors, roof levels, casework, equipment, and building systems.

B. Contractor's Certified List of Completed Items: Final signed punch list submittal at Final Completion.

C. Certificates of Release: Occupancy permits from authorities having jurisdiction.

1.3 FINAL CLEAN UP

A. Upon completion of the work covered by the Contract the Contractor shall leave the completed Project ready for use and occupancy without the need of further cleaning of any kind and with all Work in new condition and in perfect order. In addition, upon completion of all Work the Contractor shall remove from the vicinity of the Work all plant, buildings, rubbish, unused materials, concrete forms and other materials belonging to him or used under its direction during construction or impairing the use or appearance of the property and shall restore such areas affected by the work to their original condition, and, in the event of its failure to do so, the same shall be removed by the Owner at the expense of the Contractor, and the Contractor and/or its surety shall be liable therefore. Final clean-up shall include but not be limited to the following:

1. All finished surfaces shall be swept, dusted, washed and polished. This includes cleaning of the Work of all finishing trades where needed, whether or not cleaning by such trades is included in their respective sections of the specifications.

2. Roofs, utility tunnels, manholes and pipe trenches and spaces between the new and existing Work shall be left thoroughly cleaned.

3. Finished flooring shall be thoroughly cleaned in accordance with the manufacturer's recommendations.

4. Where the finish of floors has been marred or damaged in any space or area, the entire floor of that space or area shall be refinished as recommended by the manufacturers of the flooring.

5. All equipment shall be in an undamaged, bright, clean, polished and new appearing condition.

6. All new glass shall be washed and polished, both sides. The Contractor shall be responsible for all breakage of glass in the area of the Work from the commencement of its activities until the building is turned over to Owner. The Contractor shall replace all broken glass and deliver the entire building with all glazing intact and clean.

7. Provide new filters for all fan convectors after final cleaning.

8. Refer to exterior clean up. Remove paint and glazing compound from surfaces.

B. Clean adjacent structures and improvements of dust, dirt, and debris caused by construction operations. Return adjacent areas to condition existing before construction operations began.

C. Cleaning of Renovated Duct Systems and Existing Duct Systems in Renovated Areas:

1. Cleaning work shall be performed by firm which has minimum three (3) years' experience in mechanical cleaning of air systems. Work shall be done by skilled mechanics, technicians and experienced supervisors.

2. Clean dirt, dust and debris from air units, associated equipment air ducts; sanitize same. Cleaning shall include:

   a. Cleaning of air unit's supply, return and exhaust sections including coils, fans, filter racks, outdoor air intake shaft, and interior surfaces.

   b. Cleaning of dampers, heating coils, humidifiers, and similar devices in ductwork.

   c. Marking of duct-mounted damper settings, prior to cleaning, and returning dampers to marked positions after cleaning. This includes fire dampers, zone dampers, balancing dampers and volume dampers.

   d. Cleaning of terminal supply, return and exhaust grilles, registers and diffusers.

   e. Cutting of access holes in ductwork for cleaning process, as well as sealing and patching of same.

   f. Removal of portions of duct system which cannot otherwise be thoroughly cleaned, and replacement thereof.

   g. Sealing of lined duct systems, upon completion.

   h. Removal and reinstallation of ceiling panels, tiles, ceiling support tracks, and other ceiling construction, as required to facilitate cleaning.

   i. Providing access doors required to facilitate cleaning.

3. Cleaning shall meet National Air Duct Cleaners Association (NADCA) Standards, capable of verification by NADCA Vacuum Test. Cleanliness shall be subject to Architect's visual review; provide re-cleaning as necessary to satisfy Architect

   a. Cleaning methods may include vacuuming, brushing, mechanical brushing, scraping, or air washing. Use method best suited for locations involved.

   b. Do NOT use methods which could damage the system or the building.

   c. Remove dirt, dust, lint and other accumulations by HEPA filtered air machine capable of minimum 6000 cfm. Air machine shall operate to obtain 1250 fpm across the work space. Use brushes, mechanical agitators or air whips to dislodge contaminants to be collected by the air machine.

   d. Cleaning shall begin at the furthest point of the return system and at the outdoor air intake. Cleaning shall proceed toward the air handling equipment. Cleaning shall finish at the furthest point of the supply ductwork.

1.4 MAINTENANCE STOCK

A. Turn over to Owner's Representative the maintenance stock specified. Contractor shall obtain signed receipt from Owner's Representative for all maintenance stock.

2.0 PRODUCTS – NOT USED

3.0 EXECUTION – NOT USED

*****END OF SECTION 01 77 00*****

SECTION 01 78 22 FIXED EQUIPMENT INVENTORY

1.0 GENERAL

1.1 FIXED EQUIPMENT INVENTORY

A. The Owner shall provide the Contractor with a list of Equipment Types to be inventoried and an Excel template.

B. The Contractor shall populate the template (see Example Equipment List to be inventoried in Section 1.2). Once populated, the Contractor shall electronically return to the list to the Owner's Representative. The initial data to be captured on each piece of equipment shall include:

1. Name of Product
2. Equipment Classification
3. Manufacturer
4. Model Number
5. Serial Number
6. Cost
7. Location (including Building and Room Number)
8. Acquisition Date (Date of Installation)

C. The Owner shall from the Contractor provided data create a follow-up equipment Excel template that contains the MAXIMO ID for the equipment with all the name plate and specification fields for each type of equipment. This template shall then be returned to the Contractor.

D. The Contractor shall be responsible for the initial labeling of the equipment and its' disconnects with the MAXIMO ID using an electronic label maker. ID labels shall be in close proximity to Equipment Identification information, visually locatable from the access point to the equipment and on the face of disconnects.

E. The Contractor shall then populate the MAXIMO Equipment Specification Template with the equipment nameplate, specification information, and warranty information. The Contractor shall electronically submit the equipment data and any related documentation (i.e. - O&M manuals) to the Owner's Representative.

F. EXAMPLE EQUIPMENT LIST

- Building Equipment
- AC Drive/VSD
- Air Dryer
- Backflow Preventor
- Air Compressor
  - Building
  - Sprinkler
  - Control
  - Vacuum
- Pump
  - Condensate
  - Glycol
  - CWC
  - HWC
  - Potable
  - Sanitary Sewer
  - Storm Sewer
  - Sump
  - Quality Water
  - Fuel
- Fan
  - Exhaust
  - Supply
  - Return
- Fume Hood
- Furnace
- Generator
- Hot Water Heater
- Heat Exchangers
- Boiler
- Tank
- Unit Heater
- Fan Coil
- VAV Box
- Transfer Switch
- Motor
  - Pump
  - Fan
- Lift/Levelers
- Water Softener
- Reverse Osmosis

2.0 PRODUCTS – NOT USED

3.0 EXECUTION – NOT USED

END OF SECTION 01 78 22

SECTION 01 78 23 OPERATING AND MAINTENANCE DATA

1.0 GENERAL

1.1 DESCRIPTION

A. The Contractor shall compile product data and related information appropriate for Owner's maintenance and operation of products furnished under the Contract.

1. Prepare operating and maintenance data as specified in this Section, as referenced in other pertinent sections of Specifications and as necessary to operate the completed work.

2. Operations and maintenance data, in final format, shall be available to the Owner prior to substantial completion.

B. Instruct Owner's personnel in the maintenance of products and in the operation of equipment and systems.

1.2 FORM OF SUBMITTALS

A. Prepare data in the form of an instructional manual for use by Owner's personnel.

B. Submit a CD with electronic .pdf files, upload electronic files to ePM system of complete manual in final form.

1. Format:

a. Size: 8-1/2" x 11”.

b. Text: Manufacturer's, scanned .pdf and/or neatly typewritten Word file.

c. Drawings in electronic format

- Drawings are required in PDF format. Drawings shall be in AutoCAD v14 or higher format.

d. Provide fly-leaf for each separate product, and major component parts of equipment.

- Provide type description of product, and major component parts of equipment.

- Provide indexed PDF bookmarks.

- Provide a series of files organized in subdirectories with a summary index with hyperlinks to the various documents.

e. Cover: Identify each volume with title "OPERATIONS AND MAINTENANCE INSTRUCTIONS".

List:

- Title of Project
- Identity of separate structure as applicable.
- Identity of general subject matter covered in the manual.

1.3 CONTENT OF MANUAL

A. Table of contents, typewritten, for each volume, arranged in a systematic order.

1. Contractor, name of responsible principal, address and telephone number.
2. A list of each product required to be included, indexed to the content of the volume.
3. List, with each product, the name, address and telephone number of:
   a. Subcontract or installer.
   b. Maintenance contractor, as appropriate.
   c. Identify the area of responsibility of each.
   d. Local source of supply for parts and replacement.
4. Identify each product by product name and other identifying symbols as set forth in Contract Documents.

B. Product Data:

1. Include only those sheets which are pertinent to the specific product.
2. Annotate each sheet to:
   a. Clearly identify the specific product or part installed.
   b. Clearly identify the data applicable to the installation.
   c. Delete reference to inapplicable information.

C. Submittal Data:

1. Include a record copy of the final, approved product submittal. Record copy shall be a clean copy (free of notes from the design professional) which has been updated to reflect the “as-installed” system.

D. Drawings:

1. Supplement product data with drawings as necessary to clearly illustrate:

a. Relations of component parts of equipment and systems.

b. Control and flow diagrams.

2. Coordinate drawings with information on Record Documents to assure correct illustration of completed installation.

3. Do not use Record Documents as maintenance drawings.

E. Written text, as required to supplement product data for the particular installation:

1. Organize in a consistent format under separate headings for different procedures.

2. Provide a logical sequence of instructions for each procedure.

F. Original copy of each warranty, bond and service contract issued.

1. Provide information sheet for Owner's personnel, give:

a. Proper procedures in the event of failure.

b. Instances which might affect the validity of warranties or bonds.

1.4 MANUAL FOR MATERIALS AND FINISHES

A. Submit electronic .pdf files, upload electronic files to ePM system.

B. Content, for architectural products, applied materials and finishes:

1. Manufacturer's data, giving full information on products:

a. Catalog number, size, and composition.

b. Color and texture designations.

c. Information required for reordering special-manufactured products.

d. Certification as to asbestos free

2. Instructions for care and maintenance:

a. Manufacturer's recommendation for types of cleaning agents and methods.

b. Cautions against cleaning agents and methods which are detrimental to the product.

c. Recommended schedule for cleaning and maintenance.

C. Content, for moisture-protection and weather-exposed products:

1. Manufacturer's data, giving full information on products.

a. Applicable standards

b. Chemical composition

c. Details of installation

2. Instructions for inspection, maintenance, and repair.

D. Additional requirements for maintenance data: The respective sections of Specifications.

1.5 MANUAL FOR EQUIPMENT AND SYSTEMS

A. Submit electronic .pdf files, upload electronic files to ePM system.

B. Content, for each unit of equipment and system, as appropriate:

1. Description of unit and component parts.

a. Function, normal operating characteristics, and limiting conditions.

b. Performance curves, engineering data and tests.

c. Complete nomenclature and commercial number of all replaceable parts.

2. Operating procedures:

a. Start-up, break-in, routine and normal operating instructions.

b. Regulation, control, stopping, shut-down and emergency instructions.

c. Summer and winter operating instructions.

d. Special operating instructions.

3. Maintenance Procedures:

a. Routine operations.

b. Guide to "trouble-shooting".

c. Disassembly, repair and reassembly.

d. Alignment, adjusting and checking.

4. Servicing and lubrication required:

a. List of lubricants required.

5. Manufacturer's printed operating and maintenance instructions.

6. Description of sequence of operation by control manufacturer.

7. Original manufacturer's parts list, illustrations, assembly drawings and diagrams required for maintenance.

   a. Predicted life of parts subject to wear.

   b. Items recommended to be stocked as spare parts.

8. As-installed control diagrams by controls manufacturer.

9. Each contractor's coordination drawings.

   a. As-installed color coded piping diagrams.

10. Charts of valve tag numbers, with the location and function of each valve.

11. List of original manufacturer's spare parts, manufacturer's current prices, and recommended quantities to be maintained in storage.

12. Other data as required under pertinent sections of Specifications.

C. Content, for each electric and electronic system, as appropriate:

1. Description of system and component parts:

   a. Function, normal operating characteristics, and limiting conditions.

   b. Performance curves, engineering data and tests.

   c. Complete nomenclature and commercial number of replaceable parts.

2. Circuit directories of panel boards:

   a. Electrical service.

   b. Controls.

   c. Communications.

3. As-installed color coded wiring diagrams.

4. Operating procedures:

   a. Routine and normal operating instructions.

   b. Sequences required.

   c. Special operating instructions.

5. Maintenance procedures:

   a. Routine operations.

   b. Guide to "trouble-shooting".

   c. Disassembly, repair and reassembly.

   d. Adjustment and checking.

6. Manufacturer's printed operating and maintenance instructions.

7. List of original manufacturer's spare parts, manufacturer's current prices, and recommended quantities to be maintained in storage.

8. Other data as required under pertinent sections of Specifications.

D. Additional requirements for operations and maintenance data: See the respective sections of Specifications and General Conditions.

1.6 SUBMITTAL REQUIREMENTS

A. Submit through ePM system preliminary draft of proposed formats and outlines of contents thirty (30) calendar days after approved submittals.

B. Submit completed data in final form twenty (20) calendar days prior the Acceptance Phase of the Project.

C. Submit specified number of copies of approved data in final form prior to final acceptance.

1.7 INSTRUCTIONS OF OWNER'S PERSONNEL

A. Prior to final inspections or acceptance, fully instruct Owner's designated operating and maintenance personnel in the operation, adjustment and maintenance of all products, equipment and systems:

   1. Instruction time shall be sufficient to fully instruct all shifts of the Owner's operating and maintenance personnel.

B. Operations and maintenance shall constitute the basis of instruction:

   1. Review contents of manual with personnel in full detail to explain all aspects of operations and maintenance.

C. Submit typewritten statement, signed by each of Owner's Representatives who have been instructed, describing:

1. Method of Instruction.

2. Equipment and Systems Operated.

3. Length of Instruction Period.

D. Contractor is fully responsible until final acceptance, even though operated by Owner's personnel, unless otherwise agreed in writing.

1.8 OPERATING INSTRUCTIONS

A. List under clear plastic (1/8" thick) all operating, maintenance and starting precautions and procedures to be followed by Owner for operating all systems and equipment.

2.0 PRODUCTS – NOT USED

3.0 EXECUTION – NOT USED

*****END OF SECTION 01 78 23*****

SECTION 01 78 36 WARRANTIES AND BONDS

1.0 GENERAL

1.1 DESCRIPTION

The Contractor shall:

A. Compile specified warranties and bonds.

B. Compile specified service and maintenance contracts.

C. Co-execute submittals when so specified.

D. Review submittals to verify compliance with Contract Documents.

E. Submit to Architect for transmittal to Owner.

1.2 SUMMARY

A. This Section specifies general administrative and procedural requirements for warranties and bonds required by the Contract Documents, including manufacturers standard warranties on products and special warranties.

1. Refer to the General Conditions for terms of the Contractor's special warranty of workmanship and materials.

2. General closeout requirements are included in Section 01 77 00 - "Project Closeout."

3. Specific requirements for warranties for the Work and products and installations that are specified to be warranted, are included in the individual Sections of Divisions 2 through 40.

4. Certifications and other commitments and agreements for continuing services to Owner are specified elsewhere in the Contract Documents.

B. Disclaimers and Limitations: Manufacturer's disclaimers and limitations on product warranties do not relieve the Contractor of the warranty on the Work that incorporates the products, nor does it relieve suppliers, manufacturers, and subcontractors required to countersign special warranties with the Contractor.

1.3 DEFINITIONS

A. Standard Product Warranties are pre-printed written warranties published by individual manufacturers for particular products and are specifically endorsed by the manufacturer to the Owner.

B. Special Warranties are written warranties required by or incorporated in the Contract Documents, either to extend time limits provided by standard warranties or to provide greater rights for the Owner

1.4 QUALITY ASSURANCE

A. Use adequate care and diligence to review Contract Documents to identify detailed requirements relating to warranties and bonds.

B. Verify that each item required for this submittal conforms with specified requirements.

1.5 WARRANTY REQUIREMENTS

A. In addition to standard and special warranties described in Divisions 2 through 40, Contractor shall warrant Work included in this project, for a minimum period of one (1) year following acceptance of a Certificate of Substantial Completion by Owner, to cover performance, materials, workmanship and compliance with Contract Documents.

B. Corrective Work: Provide service within thirty (30) calendar days when requested by Owner. Perform services during normal working hours, unless specifically directed otherwise by Owner. Coordinate with Owner's representative to schedule performance of corrective work. Where designated service providers cannot perform corrective work within the Owner's required time frame, engage another qualified service provider. Submit a written statement to Owner upon completion of corrective work; document work performed and list outstanding items, if any.

1. When a completed breakdown of a piece of equipment occurs of the malfunction of a system affects the environment or program involving 50 or more persons at a time (employees and students combined), or creates a safety or security risk to the Owner, an EMERGENCY may be declared by the Owner. The Owner may declare an emergency as defined above at which time the service response must be within 4 hours and may require action during non-normal working hours.

2. When an emergency condition occurs, the Owner may take immediate corrective action to relieve the problem by making, a minimum as possible, temporary adjustments and/or repairs when necessary to decrease the problem until the designated Contractor's representative can respond. These temporary adjustments and repairs will in no way jeopardize the existing warranty.

3. The Owner's service staff will advise the Contractor's Representative of all temporary adjustments and repairs done in relation to the malfunctioning equipment or facility.

4. If the Contractor fails to respond with actual service within four (4) hours, and/or the necessary repairs or adjustments are not satisfactorily complete twenty-four (24) hours, the Owner will have the authority to make the necessary repairs or adjustments and charge the Contractor for parts and labor.

5. If all adjustments and repairs done by the Owner in relation to the above conditions are done by authorized district personnel, there will be no negative effect of future warranty claims.

C. Related Damages and Losses: When correcting failed or damaged warranted Work, remove and replace other Work that has been damaged as a result of such failure or that must be removed and replaced to provide access for correction of warranted Work.

D. Reinstatement of Warranty: When Work covered by a warranty has failed and been corrected by replacement or rebuilding, reinstate the warranty by written endorsement. The reinstated warranty shall be equal to the original warranty with an equitable adjustment for depreciation.

E. Replacement Cost: Upon determination that Work covered by a warranty has failed, replace or rebuild the Work to an acceptable condition complying with requirements of Contract Documents. The Contractor is responsible for the cost of replacing or rebuilding defective Work regardless of whether the Owner has benefited from use of the Work through a portion of its anticipated useful service life.

F. Owner's Recourse: Expressed warranties made to the Owner are in addition to implied warranties, and shall not limit the duties, obligations, rights and remedies otherwise available under the law. Expressed warranty periods shall not be interpreted as limitations on time in which the Owner can enforce such other duties, obligations, rights, or remedies.

G. Contractor's Procurement Obligations: Do not purchase, subcontract for, or allow others to purchase or subcontract for materials or units of Work for Project where a special project guaranty, specified product warranty, certification, or similar commitment is required until it has been determined that entities required to sign or countersign such commitments are willing to do so.

H. Specific Warranty. Where a special warranty, certification, or similar commitment is required on such Work or part of the Work, the Owner reserves the right to refuse to accept the Work until the Contractor presents evidence that entities required to countersign such commitments are willing to do so.

1.6 SUBMITTAL REQUIREMENTS

A. Submit written warranties to the Architect prior to the date certified for Substantial Completion. If the Architect’s Certificate of Substantial Completion designates a commencement date for warranties other than the date of Substantial Completion for the Work, or a designated portion of the Work, submit written warranties upon request of the Architect or Owner.

1. When a designated portion of the Work is completed and occupied or used by the Owner, by separate agreement with the Contractor during the construction period, submit properly executed warranties to the Architect and Owner within fifteen (15) days of completion of that designated portion of the Work.

B. When a special warranty is required to be executed by the Contractor, or the Contractor and a subcontractor, supplier or manufacturer, prepare a written document that contains appropriate terms and identification, ready for execution by the required parties. Submit a draft to the Owner through the Architect for acceptance prior to final execution.

1.7 SUBMITTALS REQUIRED

A. Submit warranties, bonds, and service and maintenance contracts as specified in the respective sections of Specifications. Submit a schedule listing all required warranties.

2.0 PRODUCTS – NOT USED

3.0 EXECUTION

3.1 FORM OF SUBMITTALS

A. The Warranties and Bonds shall be in electronic pdf format. Each submission shall include the title of the Project and the name of the Contractor.

B. Provide a series of files organized in subdirectories with a summary index with hyperlinks to the various documents and or references.

C. Assemble warranties, bonds and service and maintenance contracts, executed by each of the respective manufacturers, suppliers and subcontractors.

D. Table of Contents: Neatly typed, in orderly sequence. Provide complete information for each item.

1. Product or work item.

2. Item description.

3. Notation of what the equipment serves (e.g. – Provides perimeter heat)

4. Warranty Provider. Is the warranty provided by a manufacturer or installer?

5. Firm, with name of principal and responsible party, address and telephone number.

6. Scope.

7. Duration.

a. Date of beginning of warranty, bond or service and maintenance contract

b. End date of warranty, bond or service and maintenance contract.

8. Provide information for Owner's personnel:

   a. Proper procedure in case of failure.

   b. Instances which might affect the validity of warranty or bond.

9. Contractor, name of responsible principal, address and telephone number.

3.2 TIME OF SUBMITTALS

A. Make final submittals within ten (10) days after Date of Substantial Completion, prior to final request for payment.

B. For items of work when acceptance is delayed materially beyond the Date of Substantial Completion, provide updated submittal within ten (10) days after acceptance, listing the date of acceptance as the start of the warranty period.

*****END OF SECTION 01 78 36*****

SECTION 01 78 39 RECORD DOCUMENTS

1.0 GENERAL

1.1 DESCRIPTION

A. The Contractor shall maintain at the site, during construction, one record copy of:

1. Drawings
2. Specifications
3. Addenda
4. Change Orders and other Modifications to the Contract
5. Architect's Field Orders or written instructions.
6. Final Shop Drawings, Product Data and Samples
7. Field Test records
8. Construction photographs

1.2 MAINTENANCE OF DOCUMENTS AND SAMPLES

A. Store documents and samples in Contractor's field office apart from documents used for construction.

1. Provide files and racks for storage of documents.
2. Provide cabinet or storage space for storage of samples.

B. File documents and samples in accordance with Data Filing Format of the Uniform Construction Index.

C. Maintain documents in a clean, dry, legible condition and in good order. Do not use record documents for construction purposes.

D. Make documents and samples available at all times for review by the Owner’s Representative and the Architect.

1.3 RECORDING

A. Label each document "AS BUILT" in neat large printed letters.

B. Record information concurrently with construction progress.

1. Do not conceal any work until required information is recorded.

C. Drawings

As built drawings shall consist of making any changes neatly and clearly on the Contract Drawings using colored ink or pencil, shall be kept current by the contractor on a day-to-day basis in concert with the progress of the work. Where applicable, the change marked on a drawing is to carry the notation “per Change Order No. X”, or similar reference which cites the reason for the change. As an alternative approach the Contractor can submit a plan for producing the “As-Built” drawings via electronic mark-up in Bluebeam, Adobe Professional, or other similar program as an alternative to colored pencil or ink mark-ups. Such plan shall be subject to approval of the Owner.

The day-to-day construction as built drawings shall be made available to the Architect or Owner’s Representative for review upon request. The "As built" drawings shall show all changes to the following areas of construction:

1. Architectural:

    a. Modifications to components dictated by the building code

    b. Wall, door, window locations

    c. Built in casework locations

    d. New rated door and wall schedules/ locations

    e. Material and products where submittals are requested

2. Civil and Structural

    a. Dimensions for load carrying elements, both horizontal and vertical

    b. Materials and products where submittals are requested

    c. Load carrying elements and foundation systems

    d. Site related elements including:

        - Building outlines, entranceways, areaways, roof overhangs, downspouts, significant architectural projections and other pertinent data.

    e. All significant changes in foundations, columns, beams, openings, concrete reinforcing, lintels, concealed anchorages and "knock-out" panels made during construction.

    f. Building envelope systems including roofing systems and building shell systems

    g. Geotechnical subsurface information

    h. Items that will require future maintenance

    i. Life safety critical items

3. Mechanical (HVAC, Plumbing and Fire Protection)

a. Products where submittals are requested

b. Final locations of all equipment.

c. Final sizes and materials of piping and ductwork.

d. Final locations of inaccessible piping and ductwork.

e. Final locations of all controls equipment, including all sensors and actuators.

f. Final locations of all valves and dampers, including all shutoff valves, balance dampers and fire dampers.

g. Location of access doors for all equipment in concealed locations.

h. Final location and arrangement of all mechanical equipment and concealed gas, sprinkler, domestic, sanitary and drainage systems piping and other plumbing, including, but not limited to, supply and circulating mains, principal valves, meters, clean-outs, drains, pumps and controls, vent stacks, sanitary and storm water drainage.

4. Electrical

a. Products where submittals were requested.

b. Circuit (wire and raceway) size, number, and type.

c. Main circuit pathways for Fire Alarm, Emergency Power, and Access Control/Security systems.

d. Final locations of equipment and devices, interior and exterior luminaires, and power supplies.

e. Final location of electric signal system panels, final arrangement of all circuits and any significant changes made in electrical signal system design as a result of Change Order or job conditions.

5. Environmental

a. Utility related elements and supporting infrastructure

D. Specifications and Addenda

Legibly mark each section to record:

1. Manufacturer, trade name, catalog number, and Supplier of each product and item of equipment actually installed.

2. Changes made by Field Order or by Change Order.

1.4 SUBMITTAL

A. At Contract close-out, deliver copies of all record documents to the Owner's Representative.

B. Accompany submittal with transmittal letter in duplicate, containing:

1. Date
2. Project title and number
3. Contractor's name and address
4. Title and number of each record document
5. Certification that each document is complete and accurate
6. Signature of Contractor or its authorized representative.

2.0 PRODUCTS – NOT USED

3.0 EXECUTION – NOT USED

*****END OF SECTION 01 78 39*****

TECHNICAL SPECIFICATIONS

FOR

BEAMLINE ENABLING: PHASE 3

CORNELL UNIVERSITY
ITHACA, NEW YORK

This page intentionally left blank.

DIVISION 1 - GENERAL REQUIREMENTS

TECHNICAL SPECIFICATIONS

DRAWINGS

END OF DOCUMENT

SECTION 02 41 19 - SELECTIVE DEMOLITION

PART 1 - GENERAL

1.1 SUMMARY

A. Section Includes:
   1. Demolition and removal of selected portions of building or structure.

1.2 DEFINITIONS

A. Remove: Detach items from existing construction and dispose of them off-site unless indicated to be salvaged or reinstalled.

B. Remove and Salvage: Detach items from existing construction, in a manner to prevent damage, and deliver to Owner ready for reuse.

C. Remove and Reinstall: Detach items from existing construction, in a manner to prevent damage, prepare for reuse, and reinstall where indicated.

D. Existing to Remain: Leave existing items that are not to be removed and that are not otherwise indicated to be salvaged or reinstalled.

1.3 MATERIALS OWNERSHIP

A. Unless otherwise indicated, demolition waste becomes property of Contractor.

1.4 CLOSEOUT SUBMITTALS

A. Inventory: Submit a list of items that have been removed and salvaged.

1.5 FIELD CONDITIONS

A. Owner will occupy portions of building immediately adjacent to selective demolition area. Conduct selective demolition so Owner's operations will not be disrupted.

B. Conditions existing at time of inspection for bidding purpose will be maintained by Owner as far as practical.

C. Notify Architect of discrepancies between existing conditions and Drawings before proceeding with selective demolition.

D. Hazardous Materials: It is not expected that hazardous materials will be encountered in the Work.
   1. Hazardous materials will be removed by Owner before start of the Work.
   2. If suspected hazardous materials are encountered, do not disturb; immediately notify Architect and Owner. Hazardous materials will be removed by Owner under a separate contract.

E. Storage or sale of removed items or materials on-site is not permitted.

F. Utility Service: Maintain existing utilities indicated to remain in service and protect them against damage during selective demolition operations.
   1. Maintain fire-protection facilities in service during selective demolition operations.

1.6 COORDINATION

A. Arrange selective demolition schedule so as not to interfere with Owner's operations.

PART 2 - PRODUCTS

2.1 PERFORMANCE REQUIREMENTS

A. Regulatory Requirements: Comply with governing EPA notification regulations before beginning selective demolition. Comply with hauling and disposal regulations of authorities having jurisdiction.

B. Standards: Comply with ANSI/ASSP A10.6 and NFPA 241.

PART 3 - EXECUTION

3.1 EXAMINATION

A. Verify that utilities have been disconnected and capped before starting selective demolition operations.

3.2 UTILITY SERVICES AND MECHANICAL/ELECTRICAL SYSTEMS

A. Existing Services/Systems to Remain: Maintain services/systems indicated to remain and protect them against damage.

B. Existing Services/Systems to Be Removed, Relocated, or Abandoned: Locate, identify, disconnect, and seal or cap off utility services and mechanical/electrical systems serving areas to be selectively demolished.
   1. Owner will arrange to shut off indicated services/systems when requested by Contractor.

3.3 PROTECTION

A. Temporary Protection: Provide temporary barricades and other protection required to prevent injury to people and damage to adjacent buildings and facilities to remain.
   1. Provide protection to ensure safe passage of people around selective demolition area and to and from occupied portions of building.
   2. Protect walls, ceilings, floors, and other existing finish work that are to remain or that are exposed during selective demolition operations.
   3. Cover and protect furniture, furnishings, and equipment that have not been removed.

B. Remove temporary barricades and protections where hazards no longer exist.

3.4 SELECTIVE DEMOLITION, GENERAL

A. General: Demolish and remove existing construction only to the extent required by new construction and as indicated. Use methods required to complete the Work within limitations of governing regulations and as follows:
   1. Neatly cut openings and holes plumb, square, and true to dimensions required. Use cutting methods least likely to damage construction to remain or adjoining construction. Use hand tools or small power tools designed for sawing or grinding, not hammering and chopping. Temporarily cover openings to remain.
   2. Cut or drill from the exposed or finished side into concealed surfaces to avoid marring existing finished surfaces.
   3. Locate selective demolition equipment and remove debris and materials so as not to impose excessive loads on supporting walls, floors, or framing.

B. Site Access and Temporary Controls: Conduct selective demolition and debris-removal operations to ensure minimum interference with roads, streets, walks, walkways, and other adjacent occupied and used facilities.

C. Removed and Salvaged Items:
   1. Clean salvaged items.
   2. Pack or crate items after cleaning. Identify contents of containers.
   3. Store items in a secure area until delivery to Owner.
   4. Transport items to Owner's storage area on-site designated by Owner.
   5. Protect items from damage during transport and storage.

D. Removed and Reinstalled Items:
   1. Clean and repair items to functional condition adequate for intended reuse.
   2. Pack or crate items after cleaning and repairing. Identify contents of containers.
   3. Protect items from damage during transport and storage.
   4. Reinstall items in locations indicated. Comply with installation requirements for new materials and equipment. Provide connections, supports, and miscellaneous materials necessary to make item functional for use indicated.

E. Existing Items to Remain: Protect construction indicated to remain against damage and soiling during selective demolition. When permitted by Architect, items may be removed to a suitable, protected storage location during selective demolition and reinstalled in their original locations after selective demolition operations are complete.

3.5 DISPOSAL OF DEMOLISHED MATERIALS

A. Remove demolition waste materials from Project site and dispose of them in an EPA-approved construction and demolition waste landfill acceptable to authorities having jurisdiction.
   1. Do not allow demolished materials to accumulate on-site.
   2. Remove and transport debris in a manner that will prevent spillage on adjacent surfaces and areas.

3. Remove debris from elevated portions of building by chute, hoist, or other device that will convey debris to grade level in a controlled descent.

B. Burning: Do not burn demolished materials.

3.6 CLEANING

A. Clean adjacent structures and improvements of dust, dirt, and debris caused by selective demolition operations. Return adjacent areas to condition existing before selective demolition operations began.

END OF SECTION 02 41 19

SECTION 05 12 00 - STRUCTURAL STEEL FRAMING

PART 1 - GENERAL

1.1 SUMMARY

A. Section Includes:
   1. Structural steel.
   2. Shrinkage-resistant grout.

1.2 DEFINITIONS

A. Structural Steel: Elements of the structural frame indicated on Drawings and as described in ANSI/AISC 303.

1.3 COORDINATION

A. Coordinate selection of shop primers with topcoats to be applied over them. Comply with paint and coating manufacturers' written recommendations to ensure that shop primers and topcoats are compatible with one another.

B. Coordinate installation of anchorage items to be embedded in or attached to other construction without delaying the Work. Provide setting diagrams, sheet metal templates, instructions, and directions for installation.

1.4 ACTION SUBMITTALS

A. Product Data:
   1. Structural-steel materials.
   2. High-strength, bolt-nut-washer assemblies.
   3. Threaded rods.
   4. Shop primer.
   5. Shrinkage-resistant grout.

B. Shop Drawings: Show fabrication of structural-steel components.
   1. Include details of cuts, connections, splices, camber, holes, and other pertinent data.
   2. Include embedment Drawings.
   3. Indicate welds by standard AWS symbols, distinguishing between shop and field welds, and show size, length, and type of each weld. Show backing bars that are to be removed and supplemental fillet welds where backing bars are to remain.
   4. Indicate type, size, and length of bolts, distinguishing between shop and field bolts. Identify pretensioned and slip-critical, high-strength bolted connections.

C. Delegated Design Submittal: For structural-steel connections indicated on Drawings to comply with design loads, include analysis data signed and sealed by the qualified professional engineer responsible for their preparation.

1.5 INFORMATIONAL SUBMITTALS

A. Qualification Data: For professional engineer.

B. Welding certificates.

C. Paint Compatibility Certificates: From manufacturers of topcoats applied over shop primers, certifying that shop primers are compatible with topcoats.

D. Mill test reports for structural-steel materials, including chemical and physical properties.

E. Product Test Reports: For the following:
   1. Bolts, nuts, and washers, including mechanical properties and chemical analysis.
   2. Direct-tension indicators.
   3. Tension-control, high-strength, bolt-nut-washer assemblies.

F. Survey of existing conditions.

1.6 QUALITY ASSURANCE

A. Welding Qualifications: Qualify procedures and personnel in accordance with AWS D1.1/D1.1M.

1.7 DELIVERY, STORAGE, AND HANDLING

A. Store materials to permit easy access for inspection and identification. Keep steel members off ground and spaced by using pallets, dunnage, or other supports and spacers. Protect steel members and packaged materials from corrosion and deterioration.
   1. Do not store materials on structure in a manner that might cause distortion, damage, or overload to members or supporting structures. Repair or replace damaged materials or structures as directed.

B. Store fasteners in a protected place in sealed containers with manufacturer's labels intact.
   1. Fasteners may be repackaged provided Owner's testing and inspecting agency observes repackaging and seals containers.
   2. Clean and relubricate bolts and nuts that become dry or rusty before use.
   3. Comply with manufacturers' written recommendations for cleaning and lubricating ASTM F3125/F3125M, Grade F1852 bolt assemblies and for retesting bolt assemblies after lubrication.

PART 2 - PRODUCTS

2.1 PERFORMANCE REQUIREMENTS

A. Comply with applicable provisions of the following specifications and documents:
   1. ANSI/AISC 303.

2. ANSI/AISC 360.
3. RCSC's "Specification for Structural Joints Using High-Strength Bolts."

2.2 STRUCTURAL-STEEL MATERIALS

A. W-Shapes: ASTM A992/A992M, Grade 50.

B. Channels, Angles, M-Shapes , S-Shapes: ASTM A36/A36M.

C. Plate and Bar: ASTM A36/A36M.

D. Cold-Formed Hollow Structural Sections: ASTM A500/A500M, Grade C structural tubing.

E. Steel Pipe: ASTM A53/A53M, Type E or Type S, Grade B.
1. Weight Class: Standard.
2. Finish: Black except where indicated to be galvanized.

F. Steel Castings: ASTM A216/A216M, Grade WCB, with supplementary requirement S11.

G. Steel Forgings: ASTM A668/A668M.

H. Welding Electrodes: Comply with AWS requirements.

2.3 BOLTS AND CONNECTORS

A. High-Strength A325 Bolts, Nuts, and Washers: ASTM F3125/F3125M, Grade A325, Type 1, heavy-hex steel structural bolts; ASTM A563, Grade DH, heavy-hex carbon-steel nuts; and ASTM F436/F436M, Type 1, hardened carbon-steel washers; all with plain finish.
1. Direct-Tension Indicators: ASTM F959/F959M, Type 325-1, compressible-washer type with plain finish.

B. High-Strength A490 Bolts, Nuts, and Washers: ASTM F3125/F3125M, Grade A490, Type 1, heavy-hex steel structural bolts or Grade F2280 tension-control, bolt-nut-washer assemblies with splined ends; ASTM A563, Grade DH, heavy-hex carbon-steel nuts; and ASTM F436/F436M, Type 1, hardened carbon-steel washers; all with plain finish.
1. Direct-Tension Indicators: ASTM F959/F959M, Type 490-1, compressible-washer type with plain finish.

C. Tension-Control, High-Strength Bolt-Nut-Washer Assemblies: ASTM F3125/F3125M, Grade F1852, Type 1, heavy-hex head assemblies, consisting of steel structural bolts with splined ends; ASTM A563, Grade DH, heavy-hex carbon-steel nuts; and ASTM F436/F436M, Type 1, hardened carbon-steel washers.
1. Finish: Plain.

2.4 RODS

A. Threaded Rods: ASTM A36/A36M.
   1. Nuts: ASTM A63 heavy-hex carbon steel.
   2. Washers: ASTM A36/A36M carbon steel.
   3. Finish: Plain.

2.5 PRIMER

A. Steel Primer:
   1. Fabricator's standard lead- and chromate-free, nonasphaltic, rust-inhibiting primer complying with MPI#79 and compatible with topcoat.

2.6 SHRINKAGE-RESISTANT GROUT

A. Nonmetallic, Shrinkage-Resistant Grout: ASTM C1107/C1107M, factory-packaged, nonmetallic aggregate grout, noncorrosive and nonstaining, mixed with water to consistency suitable for application and a 30-minute working time.

2.7 FABRICATION

A. Structural Steel: Fabricate and assemble in shop to greatest extent possible. Fabricate in accordance with ANSI/AISC 303 and to ANSI/AISC 360.
   1. Camber structural-steel members where indicated.
   2. Fabricate beams with rolling camber up.
   3. Identify high-strength structural steel in accordance with ASTM A6/A6M and maintain markings until structural-steel framing has been erected.
   4. Mark and match-mark materials for field assembly.
   5. Complete structural-steel assemblies, including welding of units, before starting shop-priming operations.

B. Thermal Cutting: Perform thermal cutting by machine to greatest extent possible.
   1. Plane thermally cut edges to be welded to comply with requirements in AWS D1.1/D1.1M.

C. Bolt Holes: Cut, drill, or punch standard bolt holes perpendicular to metal surfaces.

D. Finishing: Accurately finish ends of columns and other members transmitting bearing loads.

E. Cleaning: Clean and prepare steel surfaces that are to remain unpainted in accordance with SSPC-SP 3.

F. Holes: Provide holes required for securing other work to structural steel and for other work to pass through steel members.
   1. Cut, drill, or punch holes perpendicular to steel surfaces. Do not thermally cut bolt holes or enlarge holes by burning.
   2. Baseplate Holes: Cut, drill, mechanically thermal cut, or punch holes perpendicular to steel surfaces.
   3. Weld threaded nuts to framing and other specialty items indicated to receive other work.

2.8 SHOP CONNECTIONS

A. High-Strength Bolts: Shop install high-strength bolts in accordance with RCSC's "Specification for Structural Joints Using High-Strength Bolts" for type of bolt and type of joint specified.
   1. Joint Type: Snug tightened unless otherwise indicated as slip critical.

B. Weld Connections: Comply with AWS D1.1/D1.1M for tolerances, appearances, welding procedure specifications, weld quality, and methods used in correcting welding work.
   1. Assemble and weld built-up sections by methods that maintain true alignment of axes without exceeding tolerances in ANSI/AISC 303 for mill material.

2.9 SHOP PRIMING

A. Shop prime steel surfaces.

B. Surface Preparation of Steel: Clean surfaces to be painted. Remove loose rust and mill scale and spatter, slag, or flux deposits. Prepare surfaces in accordance with the following specifications and standards:
   1. SSPC-SP 3.

C. Priming: Immediately after surface preparation, apply primer in accordance with manufacturer's written instructions and at rate recommended by SSPC to provide a minimum dry film thickness of 1.5 mils. Use priming methods that result in full coverage of joints, corners, edges, and exposed surfaces.
   1. Stripe paint corners, crevices, bolts, welds, and sharp edges.
   2. Apply two coats of shop paint to surfaces that are inaccessible after assembly or erection. Change color of second coat to distinguish it from first.

2.10 SOURCE QUALITY CONTROL

A. Testing Agency: Owner will engage a qualified testing agency to perform shop tests and inspections.
   1. Allow testing agency access to places where structural-steel work is being fabricated or produced to perform tests and inspections.
   2. Bolted Connections: Inspect and test shop-bolted connections in accordance with RCSC's "Specification for Structural Joints Using High-Strength Bolts."
   3. Welded Connections: Visually inspect shop-welded connections in accordance with AWS D1.1/D1.1M and the following inspection procedures, at testing agency's option:
      a. Ultrasonic Inspection: ASTM E164.
   4. Prepare test and inspection reports.

PART 3 - EXECUTION

3.1 EXAMINATION

A. Verify, with certified steel erector present, elevations of concrete- and masonry-bearing surfaces and locations of anchor rods, bearing plates, and other embedments for compliance with requirements.
   1. Prepare a certified survey of existing conditions. Include bearing surfaces, anchor rods, bearing plates, and other embedments showing dimensions, locations, angles, and elevations.

B. Proceed with installation only after unsatisfactory conditions have been corrected.

3.2 PREPARATION

A. Provide temporary shores, guys, braces, and other supports during erection to keep structural steel secure, plumb, and in alignment against temporary construction loads and loads equal in intensity to design loads. Remove temporary supports when permanent structural steel, connections, and bracing are in place unless otherwise indicated on Drawings.
   1. Do not remove temporary shoring supporting composite deck construction and structural-steel framing until cast-in-place concrete has attained its design compressive strength.

3.3 ERECTION

A. Set structural steel accurately in locations and to elevations indicated and in accordance with ANSI/AISC 303 and ANSI/AISC 360.

B. Baseplates Bearing Plates and Leveling Plates: Clean concrete- and masonry-bearing surfaces of bond-reducing materials, and roughen surfaces prior to setting plates. Clean bottom surface of plates.
   1. Set plates for structural members on wedges, shims, or setting nuts as required.
   2. Weld plate washers to top of baseplate.
   3. Snug-tighten anchor rods after supported members have been positioned and plumbed. Do not remove wedges or shims but, if protruding, cut off flush with edge of plate before packing with grout.
   4. Promptly pack shrinkage-resistant grout solidly between bearing surfaces and plates, so no voids remain. Neatly finish exposed surfaces; protect grout and allow to cure. Comply with manufacturer's written installation instructions for grouting.

C. Maintain erection tolerances of structural steel within ANSI/AISC 303.

D. Align and adjust various members that form part of complete frame or structure before permanently fastening. Before assembly, clean bearing surfaces and other surfaces that are in permanent contact with members. Perform necessary adjustments to compensate for discrepancies in elevations and alignment.
   1. Level and plumb individual members of structure. Slope roof framing members to slopes indicated on Drawings.
   2. Make allowances for difference between temperature at time of erection and mean temperature when structure is completed and in service.

E. Splice members only where indicated.

F. Do not use thermal cutting during erection unless approved by Architect. Finish thermally cut sections within smoothness limits in AWS D1.1/D1.1M.

G. Do not enlarge unfair holes in members by burning or using drift pins. Ream holes that must be enlarged to admit bolts.

3.4 FIELD CONNECTIONS

A. High-Strength Bolts: Install high-strength bolts in accordance with RCSC's "Specification for Structural Joints Using High-Strength Bolts" for bolt and joint type specified.
   1. Joint Type: Snug tightened, unless otherwise indicated as slip critical.

B. Weld Connections: Comply with AWS D1.1/D1.1M for tolerances, appearances, welding procedure specifications, weld quality, and methods used in correcting welding work.
   1. Comply with ANSI/AISC 303 and ANSI/AISC 360 for bearing, alignment, adequacy of temporary connections, and removal of paint on surfaces adjacent to field welds.
   2. Remove backing bars or runoff tabs where indicated, back gouge, and grind steel smooth.
   3. Assemble and weld built-up sections by methods that maintain true alignment of axes without exceeding tolerances in ANSI/AISC 303 for mill material.

3.5 REPAIR

A. Touchup Painting:
   1. Immediately after erection, clean exposed areas where primer is damaged or missing, and paint with the same material as used for shop painting to comply with SSPC-PA 1 for touching up shop-painted surfaces.
      a. Clean and prepare surfaces by SSPC-SP 2 hand-tool cleaning or SSPC-SP 3 power-tool cleaning.
   2. Cleaning and touchup painting are specified in Section 09 91 23 "Interior Painting."

3.6 FIELD QUALITY CONTROL

A. Special Inspections: Owner will engage a special inspector to perform the following special inspections:
   1. Verify structural-steel materials and inspect steel frame joint details.
   2. Verify weld materials and inspect welds.
   3. Verify connection materials and inspect high-strength bolted connections.

B. Testing Agency: Owner will engage a qualified testing agency to perform tests and inspections.
   1. Bolted Connections: Inspect and test bolted connections in accordance with RCSC's "Specification for Structural Joints Using High-Strength Bolts."

2. Welded Connections: Visually inspect field welds in accordance with AWS D1.1/D1.1M.
   a. In addition to visual inspection, test and inspect field welds in accordance with AWS D1.1/D1.1M and the following inspection procedures, at testing agency's option:
      1) Ultrasonic Inspection: ASTM E164.
      2) Inspect 20 percent of full penetration welds.
      3) Inspect 20 percent of fillet welds.

END OF SECTION 05 12 00

SECTION 05 31 00 - STEEL DECKING

PART 1 - GENERAL

1.1 SUMMARY

A. Section Includes:
   1. Composite metal deck.

1.2 ACTION SUBMITTALS

A. Product Data:
   1. Composite metal deck.

B. Shop Drawings:
   1. Include layout and types of deck panels, anchorage details, reinforcing channels, pans, cut deck openings, special jointing, accessories, and attachments to other construction.

1.3 INFORMATIONAL SUBMITTALS

A. Welding certificates.

1.4 QUALITY ASSURANCE

A. Welding Qualifications: Qualify procedures and personnel in accordance with SDI QA/QC and the following welding codes:
   1. AWS D1.1/D1.1M.
   2. AWS D1.3/D1.3M.

1.5 DELIVERY, STORAGE, AND HANDLING

A. Protect steel deck from corrosion, deformation, and other damage during delivery, storage, and handling.

B. Store products in accordance with SDI MOC3. Stack steel deck on platforms or pallets and slope to provide drainage. Protect with a waterproof covering and ventilate to avoid condensation.

PART 2 - PRODUCTS

2.1 PERFORMANCE REQUIREMENTS

A. AISI Specifications: Comply with calculated structural characteristics of steel deck in accordance with AISI S100.

2.2 COMPOSITE METAL DECK

A. Fabrication of Composite Metal Deck: Fabricate panels, with integrally embossed or raised pattern ribs and interlocking side laps, to comply with SDI C, with the minimum section properties indicated, and with the following:
   1. Galvanized-Steel Sheet: ASTM A653/A653M, Structural Steel (SS), Grade 33, G90 zinc coating.
   2. Profile Depth: 1-1/2 inches.
   3. Design Uncoated-Steel Thickness: 0.0358 inch.
   4. pan Condition: As indicated.

2.3 ACCESSORIES

A. Provide manufacturer’s standard accessory materials for deck that comply with requirements indicated.

B. Side-Lap Fasteners: Corrosion-resistant, hexagonal washer head; self-drilling, carbon-steel screws, No. 10 minimum diameter.

C. Miscellaneous Sheet Metal Deck Accessories: Steel sheet, minimum yield strength of 33,000 psi, not less than 0.0359-inch design uncoated thickness, of same material and finish as deck; of profile indicated or required for application.

D. Galvanizing Repair Paint: ASTM A780/A780M.

PART 3 - ’EXECUTION

3.1 EXAMINATION

A. Examine supporting frame and field conditions for compliance with requirements for installation tolerances and other conditions affecting performance of the Work.

B. Proceed with installation only after unsatisfactory conditions have been corrected.

3.2 INSTALLATION, GENERAL

A. Install deck panels and accessories in accordance with SDI C, SDI NC, and SDI RD, as applicable; manufacturer’s written instructions; and requirements in this Section.

B. Install temporary shoring before placing deck panels if required to meet deflection limitations.

C. Locate deck bundles to prevent overloading of supporting members.

D. Place deck panels on supporting frame and adjust to final position with ends accurately aligned and bearing on supporting frame before being permanently fastened. Do not stretch or contract side-lap interlocks.

E. Place deck panels flat and square and fasten to supporting frame without warp or deflection.

F. Cut and neatly fit deck panels and accessories around openings and other work projecting through or adjacent to deck.

G. Provide additional reinforcement and closure pieces at openings as required for strength, continuity of deck, and support of other work.

H. Comply with AWS requirements and procedures for manual shielded metal arc welding, appearance and quality of welds, and methods used for correcting welding work.

3.3 INSTALLATION OF METAL DECK

A. Fasten deck panels to steel supporting members by arc spot (puddle) welds of the surface diameter indicated and as follows:
   1. Weld Diameter and Spacing: As indicated on Drawings.

B. Side-Lap and Perimeter Edge Fastening: Fasten side laps and perimeter edges of panels between supports, at intervals not exceeding the lesser of one-half of the span or 36 inches, and as follows:
   1. Mechanically fasten with self-drilling, No. 10 diameter or larger, carbon-steel screws.

C. End Bearing: Install deck ends over supporting frame with a minimum end bearing of 1-1/2 inches, with end joints as follows:
   1. End Joints: Lapped.

3.4 REPAIR

A. Galvanizing Repairs: Prepare and repair damaged galvanized coatings on both surfaces of deck with galvanized repair paint in accordance with ASTM A780/A780M and manufacturer's written instructions.

3.5 FIELD QUALITY CONTROL

A. Testing Agency: Owner will engage a qualified testing agency to perform tests and inspections.

B. Tests and Inspections:
   1. Special inspections and qualification of welding special inspectors for cold-formed steel floor and roof deck in accordance with quality-assurance inspection requirements of SDI QA/QC.
      a. Field welds will be subject to inspection.
   2. Steel decking will be considered defective if it does not pass tests and inspections.

C. Prepare test and inspection reports.

END OF SECTION 05 31 00

SECTION 05 43 00 – STRUT TYPE METAL FRAMING

PART 1 - GENERAL

1.1 SUMMARY

A. Section Includes:
   1. Framing shall be a strut type metal framing system (Strut System).
   2. Strut System shall be used:
      a. To support laboratory equipment, mechanical equipment, electrical equipment, and similar devices.
      b. For structural applications as applicable.
   3. Strut System and components must be supplied from a single approved Manufacturer.

1.2 ACTION SUBMITTALS

A. Product Data:
   1. Strut framing system.
   2. Pertinent manufacturers published data.

B. Shop Drawings:
   1. Assembly drawings necessary to install the strut system in compliance with the Contract Drawings.

C. Delegated Design Submittals: For strut system, including analysis data signed and sealed by the qualified professional engineer responsible for their preparation.
   1. Structural calculations by a Registered Professional or Structural Engineer in the State of the Project's location for approval by the Professional of Record. Calculations may include, but are not limited to:
      a. Description of design criteria.
      b. Stress and deflection analysis.
      c. Selection of framing members, fittings, and accessories.

1.3 INFORMATIONAL SUBMITTALS

A. Delegated design engineer qualifications.

1.4 QUALITY ASSURANCE

A. Manufacturer's qualifications:
   1. The manufacturer shall have at least 10 years experience in manufacturing Strut Systems.
   2. The manufacturer must certify in writing all components supplied have been produced in accordance with an established quality assurance program.

B. Work shall meet the requirements of the following standards:
   1. Federal, State and Local codes.

2. American Iron and Steel Institute (AISI) Specification for the Design of Cold Formed Steel Structural Members 2001 Edition.
3. American Society for Testing and Materials (ASTM).
4. Metal Framing Manufacturer's Association (MFMA).

1.5 PRODUCT DELIVERY, STORAGE, AND HANDLING

A. All material is to be delivered to the work site in original factory packaging to avoid damage to the finish.

B. Upon delivery to the work site, all components shall be protected from the elements by a shelter or other covering.

1.6 WARRANTY

A. Manufacturer shall warrant for 1 year from the date of substantial completion that products will be free from defects in material or manufacture. In the event of any such defect in violation of the warranty, Manufacturer shall have the option to repair or replace any such defective product.

B. Installer shall warrant for 1 year from the date of substantial completion of work that the work will be free of defects in installation. In the event of any such defect in violation of the warranty, Installer shall have the option to repair or replace any such defective product.

PART 2 - PRODUCTS

2.1 PERFORMANCE REQUIREMENTS

A. Delegated Design: Engage a qualified professional engineer to design strut system.
1. Professional Engineering Qualifications: A professional engineer who is legally qualified to practice in New York State and who is experienced in providing engineering services of the kind indicated. Engineering services are defined as those performed for installations of systems or assemblies that are similar to those indicated for this Project in material, design, and extent.

B. Structural Performance: Strut system to withstand the effects of gravity loads and the following loads and stresses within limits and under conditions indicated.
1. Design Loads: As indicated on Drawings.
2. Future Design Loads: Design shall include provisions for expansion of systems, and shall accommodate 20% increased capacity in loads indicated on Drawings.

2.2 ACCEPTABLE MANUFACTURERS

A. Strut System and Components:
1. Product/Manufacturer: Basis of design.
a. UNISTRUT; Unistrut International.

2.3 MATERIALS

A. All channel members shall be fabricated conforming to one of the following ASTM specifications:
   1. Pre-Galvanized Carbon Steel: A 653 Grade 33.

B. All fittings shall be fabricated conforming to one of the following ASTM specifications:
   1. Carbon Steel: All carbon steel fittings shall be fabricated from steel that meets/exceeds the physical requirements of ASTM A1011 SS Grade 33 and conforms to one of the following ASTM specifications:
      a. A 575.
      b. A 576.
      c. A 36.
      d. A 635.
      e. A 1059.
      f. A 1046.

C. Size of Channels: As indicated on Drawings.

D. Provide accessories and attachment devices for a complete assembly.

2.4 FINISHES

A. Electro-Galvanized Per ASTM B 633 Type III SC 1

B. Pre-Galvanized per ASTM A653:
   1. Zinc coated by hot-dipped process prior to roll forming at the steel mill.
   2. Zinc coating thickness shall be G90 (0.75 mil = 0.45 oz./ sq. ft. surface area).

PART 3 - EXECUTION

3.1 EXAMINATION

A. The installer shall inspect the work area prior to installation. If work area conditions are unsatisfactory, installation shall not proceed until satisfactory corrections are completed.

3.2 INSTALLATION, GENERAL

A. Cutting, Fitting, and Placement: Perform cutting, drilling, and fitting required for installing strut system. Set struct system accurately in location, alignment, and elevation; with edges and surfaces level, plumb, true, and free of rack; and measured from established lines and levels.

B. Fastening to In-Place Construction: Provide anchorage devices and fasteners where strut systems are required to be fastened to in-place construction. Provide threaded fasteners for use with concrete and masonry inserts, toggle bolts, through bolts, lag screws, wood screws, and other connectors.

3.3 INSTALLATION

A. Installation shall be accomplished by a fully trained manufacturer authorized installer.

B. Set Strut System components into final position true to line, level and plumb, in accordance with shop drawings.

C. Anchor material firmly in place, and tighten all connections to their recommended torques.

3.4 CLEANUP

A. Upon completion of this section of work, remove all protective wraps and debris. Repair any damage due to installation of this section of work.

3.5 PROTECTION

A. During installation, it shall be the responsibility of the installer to protect this work from damage.

B. Upon completion of this scope of work, it shall become the responsibility of the general contractor to protect this work from damage during the remainder of construction on the project and until substantial completion.

END OF SECTION 05 43 00

SECTION 05 50 00 - METAL FABRICATIONS

PART 1 - GENERAL

1.1 SUMMARY

A. Section Includes:
1. Steel framing and supports for equipment.
2. Steel framing and supports for mechanical and electrical equipment.
3. Steel framing and supports for applications where framing and supports are not specified in other Sections.

1.2 COORDINATION

A. Coordinate selection of shop primers with topcoats to be applied over them. Comply with paint and coating manufacturers' written instructions to ensure that shop primers and topcoats are compatible with one another.

B. Coordinate installation of metal fabrications that are anchored to or that receive other work. Furnish setting drawings, templates, and directions for installing anchorages, including sleeves, concrete inserts, anchor bolts, and items with integral anchors, that are to be embedded in concrete or masonry. Deliver such items to Project site in time for installation.

1.3 ACTION SUBMITTALS

A. Product Data: For the following:
1. Fasteners.
2. Shop primers.
3. Shrinkage-resisting grout.

B. Shop Drawings: Show fabrication and installation details. Include plans, elevations, sections, and details of metal fabrications and their connections. Show anchorage and accessory items.

1.4 INFORMATIONAL SUBMITTALS

A. Qualification Data: For professional engineer's experience with providing delegated-design engineering services of the kind indicated, including documentation that engineer is licensed in the jurisdiction in which Project is located.

B. Welding certificates.

1.5 QUALITY ASSURANCE

A. Welding Qualifications: Qualify procedures and personnel in accordance with the following:
1. AWS D1.1/D1.1M, "Structural Welding Code - Steel."

1.6 FIELD CONDITIONS

A. Field Measurements: Verify actual locations of walls, floor slabs, decks, and other construction contiguous with metal fabrications by field measurements before fabrication.

PART 2 - PRODUCTS

2.1 PERFORMANCE REQUIREMENTS

A. Delegated Design: Engage a qualified professional engineer to design miscellaneous framing and supports .
   1. Professional Engineering Qualifications: A professional engineer who is legally qualified to practice in New York State and who is experienced in providing engineering services of the kind indicated. Engineering services are defined as those performed for installations of systems or assemblies that are similar to those indicated for this Project in material, design, and extent.

B. Thermal Movements: Allow for thermal movements from ambient and surface temperature changes acting on exterior metal fabrications by preventing buckling, opening of joints, overstressing of components, failure of connections, and other detrimental effects.
   1. Temperature Change: 120 deg F, ambient; 180 deg F, material surfaces.

2.2 METALS

A. Metal Surfaces, General: Provide materials with smooth, flat surfaces unless otherwise indicated. For metal fabrications exposed to view in the completed Work, provide materials without seam marks, roller marks, rolled trade names, or blemishes.

B. Steel Plates, Shapes, and Bars: ASTM A36/A36M.

C. Rolled-Steel Floor Plate: ASTM A786/A786M, rolled from plate complying with ASTM A36/A36M or ASTM A283/A283M, Grade C or D.

D. Steel Tubing: ASTM A500/A500M, cold-formed steel tubing.

E. Steel Pipe: ASTM A53/A53M, Weight (Schedule) as indicated on Drawings.

2.3 FASTENERS

A. General: Unless otherwise indicated, provide Type 316 stainless steel fasteners for exterior use and zinc-plated fasteners with coating complying with ASTM B633 or ASTM F1941/F1941M, Class Fe/Zn 5, at exterior walls. Select fasteners for type, grade, and class required.

B. Steel Bolts and Nuts: Regular hexagon-head bolts, ASTM A307, Grade A; with hex nuts, ASTM A563; and, where indicated, flat washers.

C. Anchors, General: Capable of sustaining, without failure, a load equal to six times the load imposed when installed in unit masonry and four times the load imposed when installed in concrete, as determined by testing in accordance with ASTM E488/E488M, conducted by a qualified independent testing agency.

D. Post-Installed Anchors: Torque-controlled expansion anchors or chemical anchors.
   1. Material for Interior Locations: Carbon-steel components zinc plated to comply with ASTM B633 or ASTM F1941/F1941M, Class Fe/Zn 5, unless otherwise indicated.

2.4 MISCELLANEOUS MATERIALS

A. Universal Shop Primer: Fast-curing, lead- and chromate-free, universal modified-alkyd primer complying with MPI#79 and compatible with topcoat.

B. Shrinkage-Resistant Grout: Factory-packaged, nonmetallic, nonstaining, noncorrosive, nongaseous grout complying with ASTM C1107/C1107M. Provide grout specifically recommended by manufacturer for interior and exterior applications.

2.5 FABRICATION, GENERAL

A. Shop Assembly: Preassemble items in the shop to greatest extent possible. Disassemble units only as necessary for shipping and handling limitations. Use connections that maintain structural value of joined pieces. Clearly mark units for reassembly and coordinated installation.

B. Cut, drill, and punch metals cleanly and accurately. Remove burrs and ease edges to a radius of approximately 1/32 inch unless otherwise indicated. Remove sharp or rough areas on exposed surfaces.

C. Form bent-metal corners to smallest radius possible without causing grain separation or otherwise impairing work.

D. Form exposed work with accurate angles and surfaces and straight edges.

E. Weld corners and seams continuously to comply with the following:
   1. Use materials and methods that minimize distortion and develop strength and corrosion resistance of base metals.
   2. Obtain fusion without undercut or overlap.
   3. Remove welding flux immediately.
   4. At exposed connections, finish exposed welds and surfaces smooth and blended so no roughness shows after finishing.

F. Form exposed connections with hairline joints, flush and smooth, using concealed fasteners or welds where possible. Where exposed fasteners are required, use Phillips flat-head (countersunk) fasteners unless otherwise indicated. Locate joints where least conspicuous.

G. Fabricate seams and other connections that are exposed to weather in a manner to exclude water. Provide weep holes where water may accumulate.

H. Cut, reinforce, drill, and tap metal fabrications as indicated to receive finish hardware, screws, and similar items.

I. Provide for anchorage of type indicated; coordinate with supporting structure. Space anchoring devices to secure metal fabrications rigidly in place and to support indicated loads.

2.6 MISCELLANEOUS FRAMING AND SUPPORTS

A. General: Provide steel framing and supports not specified in other Sections as needed to complete the Work.

B. Fabricate units from steel shapes, plates, and bars of welded construction unless otherwise indicated. Fabricate to sizes, shapes, and profiles indicated and as necessary to receive adjacent construction.

2.7 GENERAL FINISH REQUIREMENTS

A. Finish metal fabrications after assembly.

B. Finish exposed surfaces to remove tool and die marks and stretch lines, and to blend into surrounding surface.

C. Finish Paint Option: Finish paint items off site in a painting facility with touch up in the field after installation. Refer to Section 09 91 23 – Interior Painting.

2.8 STEEL AND IRON FINISHES

A. Shop prime iron and steel items unless they are to be embedded in concrete, sprayed-on fireproofing, or masonry, or unless otherwise indicated.
   1. Shop prime with universal shop primer unless indicated.

B. Preparation for Shop Priming: Prepare surfaces to comply with SSPC-SP 3, "Power Tool Cleaning."

C. Shop Priming: Apply shop primer to comply with SSPC-PA 1, "Paint Application Specification No. 1: Shop, Field, and Maintenance Painting of Steel," for shop painting.
   1. Stripe paint corners, crevices, bolts, welds, and sharp edges.

PART 3 - EXECUTION

3.1 INSTALLATION, GENERAL

A. Cutting, Fitting, and Placement: Perform cutting, drilling, and fitting required for installing metal fabrications. Set metal fabrications accurately in location, alignment,

and elevation; with edges and surfaces level, plumb, true, and free of rack; and measured from established lines and levels.

B. Fit exposed connections accurately together to form hairline joints. Weld connections that are not to be left as exposed joints but cannot be shop welded because of shipping size limitations. Do not weld, cut, or abrade surfaces of exterior units that have been hot-dip galvanized after fabrication and are for bolted or screwed field connections.

C. Field Welding: Comply with the following requirements:
   1. Use materials and methods that minimize distortion and develop strength and corrosion resistance of base metals.
   2. Obtain fusion without undercut or overlap.
   3. Remove welding flux immediately.
   4. At exposed connections, finish exposed welds and surfaces smooth and blended so no roughness shows after finishing and contour of welded surface matches that of adjacent surface.

D. Fastening to In-Place Construction: Provide anchorage devices and fasteners where metal fabrications are required to be fastened to in-place construction. Provide threaded fasteners for use with concrete and masonry inserts, toggle bolts, through bolts, lag screws, wood screws, and other connectors.

3.2 INSTALLATION OF MISCELLANEOUS FRAMING AND SUPPORTS

A. General: Install framing and supports to comply with requirements of items being supported, including manufacturers' written instructions and requirements indicated on Shop Drawings.

3.3 REPAIRS

A. Touchup Painting:
   1. Immediately after erection, clean field welds, bolted connections, and abraded areas. Paint uncoated and abraded areas with same material as used for shop painting to comply with SSPC-PA 1 for touching up shop-painted surfaces.
      a. Apply by brush or spray to provide a minimum 2.0-mil dry film thickness.

END OF SECTION 05 50 00

This page intentionally left blank.

SECTION 05 52 13 - PIPE AND TUBE RAILINGS

PART 1 - GENERAL

1.1 SUMMARY

A. Section Includes:
   1. Steel railings.

1.2 COORDINATION

A. Coordinate selection of shop primers with topcoats to be applied over them. Comply with paint and coating manufacturers' written recommendations to ensure that shop primers and topcoats are compatible with one another.

B. Coordinate installation of anchorages for railings. Furnish setting drawings, templates, and directions for installing anchorages, including sleeves, concrete inserts, anchor bolts, and items with integral anchors, that are to be embedded in concrete or masonry. Deliver such items to Project site in time for installation.

1.3 ACTION SUBMITTALS

A. Product Data:
   1. Shop primer.

B. Shop Drawings: Include plans, elevations, sections, details, and attachments to other work.

C. Delegated Design Submittal: For railings, including analysis data signed and sealed by the qualified professional engineer responsible for their preparation.

1.4 INFORMATIONAL SUBMITTALS

A. Qualification Data: For delegated design professional engineer.

B. Welding certificates.

1.5 QUALITY ASSURANCE

A. Welding Qualifications: Qualify procedures and personnel in accordance with the following:
   1. AWS D1.1/D1.1M, "Structural Welding Code - Steel."

1.6 DELIVERY, STORAGE, AND HANDLING

A. Protect mechanical finishes on exposed surfaces of railings from damage by applying a strippable, temporary protective covering before shipping.

1.7 FIELD CONDITIONS

A. Field Measurements: Verify actual locations of walls and other construction contiguous with railings by field measurements before fabrication.

PART 2 - PRODUCTS

2.1 PERFORMANCE REQUIREMENTS

A. Delegated Design: Engage a qualified professional engineer, as defined below, to design railings, including attachment to building construction.
   1. Professional Engineering Qualifications: A professional engineer who is legally qualified to practice in New York State and who is experienced in providing engineering services of the kind indicated. Engineering services are defined as those performed for installations of systems or assemblies that are similar to those indicated for this Project in material, design, and extent.

B. Structural Performance: Railings, including attachment to building construction, withstand the effects of gravity loads and the following loads and stresses within limits and under conditions indicated:
   1. Handrails and Top Rails of Guards:
      a. Uniform load of 50 lbf/ ft. applied in any direction.
      b. Concentrated load of 200 lbf applied in any direction.
      c. Uniform and concentrated loads need not be assumed to act concurrently.
   2. Infill of Guards:
      a. Concentrated load of 50 lbf applied horizontally on an area of 1 sq. ft..
      b. Infill load and other loads need not be assumed to act concurrently.

2.2 METALS, GENERAL

A. Metal Surfaces, General: Provide materials with smooth surfaces, without seam marks, roller marks, rolled trade names, stains, discolorations, or blemishes.

B. Brackets, Flanges, and Anchors: Cast or formed metal of same type of material and finish as supported rails unless otherwise indicated.
   1. Provide type of bracket with predrilled hole for exposed bolt anchorage and that provides 1-1/2-inch clearance from inside face of handrail to finished wall surface.

2.3 STEEL RAILINGS

A. Tubing: ASTM A500/A500M (cold formed) or ASTM A513/A513M, Type 5.

B. Pipe: ASTM A53/A53M, Type F or Type S, Grade A, Standard Weight (Schedule 40), unless another grade and weight are required by structural loads.

C. Plates, Shapes, and Bars: ASTM A36/A36M.

D. Cast Iron Fittings: Either gray iron, ASTM A48/A48M, or malleable iron, ASTM A47/A47M, unless otherwise indicated.

2.4 FASTENERS

A. Fastener Materials:
   1. Ungalvanized-Steel Railing Components: Plated steel fasteners complying with ASTM F1941/F1941M, Class Fe/Zn 5 for zinc coating.

B. Fasteners for Anchoring Railings to Other Construction: Select fasteners of type, grade, and class required to produce connections suitable for anchoring railings to other types of construction and capable of withstanding design loads.

2.5 MISCELLANEOUS MATERIALS

A. Welding Rods and Bare Electrodes: Select in accordance with AWS specifications for metal alloy welded.

B. Universal Shop Primer: Fast-curing, lead- and chromate-free, universal modified-alkyd primer complying with MPI#79 and compatible with topcoat.
   1. Use primer containing pigments that make it easily distinguishable from zinc-rich primer.

2.6 FABRICATION

A. General: Fabricate railings to comply with requirements indicated for design, dimensions, member sizes and spacing, details, finish, and anchorage, but not less than that required to support structural loads.

B. Shop assemble railings to greatest extent possible to minimize field splicing and assembly. Disassemble units only as necessary for shipping and handling limitations.
   1. Clearly mark units for reassembly and coordinated installation.
   2. Use connections that maintain structural value of joined pieces.

C. Cut, drill, and punch metals cleanly and accurately.
   1. Remove burrs and ease edges to a radius of approximately 1/32 inch unless otherwise indicated.
   2. Remove sharp or rough areas on exposed surfaces.

D. Form work true to line and level with accurate angles and surfaces.

E. Fabricate connections that are exposed to weather in a manner that excludes water.
   1. Provide weep holes where water may accumulate.
   2. Locate weep holes in inconspicuous locations.

F. Cut, reinforce, drill, and tap as indicated to receive finish hardware, screws, and similar items.

G. Connections: Fabricate railings with welded connections unless otherwise indicated.

H. Welded Connections: Cope components at connections to provide close fit, or use fittings designed for this purpose. Weld all around at connections, including at fittings.
   1. Use materials and methods that minimize distortion and develop strength and corrosion resistance of base metals.
   2. Obtain fusion without undercut or overlap.
   3. Remove flux immediately.
   4. At exposed connections, finish exposed welds to comply with NOMMA's "Voluntary Joint Finish Standards" for Finish #2 welds; good appearance, completely sanded joint, some undercutting and pinholes okay.

I. Form changes in direction as follows:
   1. As detailed.
   2. By flush bends.
   3. By bending to smallest radius that will not result in distortion of railing member.

J. Bend members in jigs to produce uniform curvature for each configuration required. Maintain cross section of member throughout entire bend without buckling, twisting, cracking, or otherwise deforming exposed surfaces of components.

K. Close exposed ends of hollow railing members with prefabricated cap and end fittings of same metal and finish as railings.

L. For removable railing posts, fabricate slip-fit sockets from steel tube or pipe whose ID is sized for a close fit with posts; limit movement of post without lateral load, measured at top, to not more than one-fortieth of post height.
   1. Provide socket covers designed and fabricated to resist being dislodged.

M. Toe Boards: Where indicated, provide toe boards at railings around openings and at edge of open-sided floors and platforms. Fabricate to dimensions and details indicated.

2.7 STEEL AND IRON FINISHES

A. For nongalvanized-steel railings, provide nongalvanized ferrous-metal fittings, brackets, fasteners, and sleeves; however, hot-dip galvanize anchors to be embedded in exterior concrete or masonry.

B. Preparation for Shop Priming: Prepare uncoated ferrous-metal surfaces to comply with SSPC-SP 3.

C. Primer Application: Apply shop primer to prepared surfaces of railings unless otherwise indicated. Comply with requirements in SSPC-PA 1 for shop painting. Primer need not be applied to surfaces to be embedded in concrete or masonry.

PART 3 - EXECUTION

3.1 INSTALLATION, GENERAL

A. Perform cutting, drilling, and fitting required for installing railings.
   1. Fit exposed connections together to form tight, hairline joints.

2. Install railings level, plumb, square, true to line; without distortion, warp, or rack.
3. Set railings accurately in location, alignment, and elevation; measured from established lines and levels.
4. Do not weld, cut, or abrade surfaces of railing components that are coated or finished after fabrication and that are intended for field connection by mechanical or other means without further cutting or fitting.
5. Set posts plumb within a tolerance of 1/16 inch in 3 feet.
6. Align rails so variations from level for horizontal members and variations from parallel with rake of steps and ramps for sloping members do not exceed 1/4 inch in 12 feet.

B. Adjust railings before anchoring to ensure matching alignment at abutting joints.

3.2 RAILING CONNECTIONS

A. Welded Connections: Use fully welded joints for permanently connecting railing components. Comply with requirements for welded connections in "Fabrication" Article, whether welding is performed in the shop or in the field.

3.3 ANCHORING POSTS

A. Anchor posts to metal surfaces as required by conditions, connected to posts and to metal supporting members as follows:
1. For steel railings, weld post to metal supporting surfaces.

3.4 REPAIR

A. Touchup Painting:
1. Immediately after erection, clean field welds, bolted connections, and abraded areas of shop paint, and paint exposed areas with the same material used for shop painting to comply with SSPC-PA 1 for touching up shop-painted surfaces.
a. Apply by brush or spray to provide a minimum 2.0-mil dry film thickness.

3.5 PROTECTION

A. Protect finishes of railings from damage during construction period with temporary protective coverings approved by railing manufacturer. Remove protective coverings at time of Substantial Completion.

B. Restore finishes damaged during installation and construction period, so no evidence remains of correction work. Return items that cannot be refinished in the field to the shop; make required alterations and refinish entire unit, or provide new units.

END OF SECTION 05 52 13

This page intentionally left blank.

SECTION 07 84 13 - PENETRATION FIRESTOPPING

PART 1 - GENERAL

1.1 SUMMARY

A. Section Includes:
   1. Penetration firestopping systems for the following applications:
      a. Penetrations in fire-resistance-rated walls.
      b. Penetrations in horizontal assemblies.
      c. Penetrations in smoke barriers.

1.2 PREINSTALLATION MEETINGS

A. Preinstallation Conference: Conduct conference at Project site.

1.3 ACTION SUBMITTALS

A. Product Data: For each type of product.

B. Product Schedule: For each penetration firestopping system. Include location, illustration of firestopping system, and design designation of qualified testing and inspecting agency.
   1. Engineering Judgments: Where Project conditions require modification to a qualified testing and inspecting agency's illustration for a particular penetration firestopping system, submit illustration, with modifications marked, approved by penetration firestopping system manufacturer's fire-protection engineer as an engineering judgment or equivalent fire-resistance-rated assembly. Obtain approval of authorities having jurisdiction prior to submittal.

1.4 INFORMATIONAL SUBMITTALS

A. Qualification Data: For Installer.

B. Product Test Reports: For each penetration firestopping system, for tests performed by a qualified testing agency.

1.5 CLOSEOUT SUBMITTALS

A. Installer Certificates: From Installer indicating that penetration firestopping systems have been installed in compliance with requirements and manufacturer's written instructions.

1.6 QUALITY ASSURANCE

A. Installer Qualifications: A firm that has been approved by FM Approval according to FM Approval 4991, "Approval Standard for Firestop Contractors," or been evaluated by UL and found to comply with its "Qualified Firestop Contractor Program Requirements."

1.7 PROJECT CONDITIONS

A. Environmental Limitations: Do not install penetration firestopping system when ambient or substrate temperatures are outside limits permitted by penetration firestopping system manufacturers or when substrates are wet because of rain, frost, condensation, or other causes.

B. Install and cure penetration firestopping materials per manufacturer's written instructions using natural means of ventilations or, where this is inadequate, forced-air circulation.

1.8 COORDINATION

A. Coordinate construction of openings and penetrating items to ensure that penetration firestopping systems can be installed according to specified firestopping system design.

B. Coordinate sizing of sleeves, openings, core-drilled holes, or cut openings to accommodate penetration firestopping systems.

PART 2 - PRODUCTS

2.1 PERFORMANCE REQUIREMENTS

A. Fire-Test-Response Characteristics:
1. Perform penetration firestopping system tests by a qualified testing agency acceptable to authorities having jurisdiction.
2. Test per testing standards referenced in "Penetration Firestopping Systems" Article. Provide rated systems complying with the following requirements:
a. Penetration firestopping systems shall bear classification marking of a qualified testing agency.
1) UL in its "Fire Resistance Directory."
2) FM Approval in its "Approval Guide."

2.2 PENETRATION FIRESTOPPING SYSTEMS

A. Manufacturers: Subject to compliance with requirements, available manufacturers offering products that may be incorporated into the Work include, but are not limited to the following:
1. 3M Fire Protection Products.
2. Hilti, Inc.
3. RectorSeal.
4. Specified Technologies, Inc.

B. Penetration Firestopping Systems: Systems that resist spread of fire, passage of smoke and other gases, and maintain original fire-resistance rating of construction penetrated. Penetration firestopping systems shall be compatible with one another, with the substrates forming openings, and with penetrating items if any.

C. Penetrations in Fire-Resistance-Rated Walls: Penetration firestopping systems with ratings determined per ASTM E814 or UL 1479, based on testing at a positive pressure differential of 0.01-inch wg.
   1. F-Rating: Not less than the fire-resistance rating of constructions penetrated.

D. Penetrations in Horizontal Assemblies: Penetration firestopping systems with ratings determined per ASTM E814 or UL 1479, based on testing at a positive pressure differential of 0.01-inch wg.
   1. F-Rating: At least one hour, but not less than the fire-resistance rating of constructions penetrated.
   2. T-Rating: At least one hour, but not less than the fire-resistance rating of constructions penetrated except for floor penetrations within the cavity of a wall.

E. Penetrations in Smoke Barriers: Penetration firestopping systems with ratings determined per UL 1479, based on testing at a positive pressure differential of 0.30-inch wg.
   1. L-Rating: Not exceeding 5.0 cfm/sq. ft. of penetration opening at and no more than 50-cfm cumulative total for any 100 sq. ft. at both ambient and elevated temperatures.

F. Exposed Penetration Firestopping Systems: Flame-spread and smoke-developed indexes of less than 25 and 450, respectively, per ASTM E84.

G. Manufactured Piping Penetration Firestopping System: Penetration firestopping systems with ratings determined per ASTM E814 or UL 1479, based on testing at a positive pressure differential of 0.01-inch wg.
   1. F-Rating: At least one hour, but not less than the fire-resistance rating of constructions penetrated.
   2. T-Rating: At least one hour, but not less than the fire-resistance rating of constructions penetrated except for floor penetrations within the cavity of a wall.
   3. Sleeve: Molded-PVC plastic, of length to match slab thickness and with integral nailing flange on one end for installation in cast-in-place concrete slabs.
   4. Stack Fitting: ASTM A48/A48M, gray-iron, hubless-pattern wye branch with neoprene O-ring at base and gray-iron plug in thermal-release harness. Include PVC protective cap for plug.
   5. Special Coating: Corrosion resistant on interior of fittings.

H. Accessories: Provide components for each penetration firestopping system that are needed to install fill materials and to maintain ratings required. Use only those components specified by penetration firestopping system manufacturer and approved by qualified testing and inspecting agency for conditions indicated.
   1. Permanent forming/damming/backing materials.
   2. Substrate primers.
   3. Collars.

4. Steel sleeves.

2.3 FILL MATERIALS

A. Cast-in-Place Firestop Devices: Factory-assembled devices for use in cast-in-place concrete floors and consisting of an outer sleeve lined with an intumescent strip, a flange attached to one end of the sleeve for fastening to concrete formwork, and a neoprene gasket.

B. Latex Sealants: Single-component latex formulations that do not re-emulsify after cure during exposure to moisture.

C. Firestop Devices: Factory-assembled collars formed from galvanized steel and lined with intumescent material sized to fit specific diameter of penetrant.

D. Intumescent Composite Sheets: Rigid panels consisting of aluminum-foil-faced intumescent elastomeric sheet bonded to galvanized-steel sheet.

E. Intumescent Putties: Nonhardening, water-resistant, intumescent putties containing no solvents or inorganic fibers.

F. Intumescent Wrap Strips: Single-component intumescent elastomeric sheets with aluminum foil on one side.

G. Mortars: Prepackaged dry mixes consisting of a blend of inorganic binders, hydraulic cement, fillers and lightweight aggregate formulated for mixing with water at Project site to form a nonshrinking, homogeneous mortar.

H. Pillows/Bags: Reusable heat-expanding pillows/bags consisting of glass-fiber cloth cases filled with a combination of mineral-fiber, water-insoluble expansion agents, and fire-retardant additives. Where exposed, cover openings with steel-reinforcing wire mesh to protect pillows/bags from being easily removed.

I. Silicone Foams: Multicomponent, silicone-based liquid elastomers that, when mixed, expand and cure in place to produce a flexible, nonshrinking foam.

J. Silicone Sealants: Single-component, silicone-based, neutral-curing elastomeric sealants.

2.4 MIXING

A. Penetration Firestopping Materials: For those products requiring mixing before application, comply with penetration firestopping system manufacturer's written instructions for accurate proportioning of materials, water (if required), type of mixing equipment, selection of mixer speeds, mixing containers, mixing time, and other items or procedures needed to produce products of uniform quality with optimum performance characteristics for application indicated.

PART 3 - EXECUTION

3.1 EXAMINATION

A. Examine substrates and conditions, with Installer present, for compliance with requirements for opening configurations, penetrating items, substrates, and other conditions affecting performance of the Work.

B. Proceed with installation only after unsatisfactory conditions have been corrected.

3.2 PREPARATION

A. Surface Cleaning: Before installing penetration firestopping systems, clean out openings immediately to comply with manufacturer's written instructions and with the following requirements:
   1. Remove from surfaces of opening substrates and from penetrating items foreign materials that could interfere with adhesion of penetration firestopping materials.
   2. Clean opening substrates and penetrating items to produce clean, sound surfaces capable of developing optimum bond with penetration firestopping materials. Remove loose particles remaining from cleaning operation.
   3. Remove laitance and form-release agents from concrete.

B. Prime substrates where recommended in writing by manufacturer using that manufacturer's recommended products and methods. Confine primers to areas of bond; do not allow spillage and migration onto exposed surfaces.

3.3 INSTALLATION

A. General: Install penetration firestopping systems to comply with manufacturer's written installation instructions and published drawings for products and applications.

B. Install forming materials and other accessories of types required to support fill materials during their application and in the position needed to produce cross-sectional shapes and depths required to achieve fire ratings.
   1. After installing fill materials and allowing them to fully cure, remove combustible forming materials and other accessories not forming permanent components of firestopping.

C. Install fill materials by proven techniques to produce the following results:
   1. Fill voids and cavities formed by openings, forming materials, accessories and penetrating items to achieve required fire-resistance ratings.
   2. Apply materials so they contact and adhere to substrates formed by openings and penetrating items.
   3. For fill materials that will remain exposed after completing the Work, finish to produce smooth, uniform surfaces that are flush with adjoining finishes.

3.4 IDENTIFICATION

A. Wall Identification: Permanently label walls containing penetration firestopping systems with the words "FIRE AND/OR SMOKE BARRIER - PROTECT ALL OPENINGS," using lettering not less than 3 inches high and with minimum 0.375-inch strokes.
   1. Locate in accessible concealed floor, floor-ceiling, or attic space at 15 feet from end of wall and at intervals not exceeding 30 feet.

B. Penetration Identification: Identify each penetration firestopping system with legible metal or plastic labels. Attach labels permanently to surfaces adjacent to and within 6 inches of penetration firestopping system edge so labels are visible to anyone seeking to remove penetrating items or firestopping systems. Use mechanical fasteners or self-adhering-type labels with adhesives capable of permanently bonding labels to surfaces on which labels are placed. Include the following information on labels:
   1. The words "Warning - Penetration Firestopping - Do Not Disturb. Notify Building Management of Any Damage."
   2. Contractor's name, address, and phone number.
   3. Designation of applicable testing and inspecting agency.
   4. Date of installation.
   5. Manufacturer's name.
   6. Installer's name.

3.5 FIELD QUALITY CONTROL

A. Owner will engage a qualified testing agency to perform tests and inspections according to ASTM E2174.

B. Where deficiencies are found or penetration firestopping system is damaged or removed because of testing, repair or replace penetration firestopping system to comply with requirements.

C. Proceed with enclosing penetration firestopping systems with other construction only after inspection reports are issued and installations comply with requirements.

3.6 CLEANING AND PROTECTION

A. Clean off excess fill materials adjacent to openings as the Work progresses by methods and with cleaning materials that are approved in writing by penetration firestopping system manufacturers and that do not damage materials in which openings occur.

B. Provide final protection and maintain conditions during and after installation that ensure that penetration firestopping systems are without damage or deterioration at time of Substantial Completion. If, despite such protection, damage or deterioration occurs, immediately cut out and remove damaged or deteriorated penetration firestopping material and install new materials to produce systems complying with specified requirements.

END OF SECTION 07 84 13

This page intentionally left blank.

SECTION 09 91 23 - INTERIOR PAINTING

PART 1 - GENERAL

1.1 SUMMARY

A. Section Includes:
   1. Primers.
   2. Water-based finish coatings.

1.2 ACTION SUBMITTALS

A. Product Data: For each type of product. Include preparation requirements and application instructions.
   1. Include preparation requirements and application instructions.
   2. Indicate VOC content.

B. Samples for Verification: For each type of paint system and each color and gloss of topcoat.
   1. Submit Samples on rigid backing, 8 inches square.
   2. Apply coats on Samples in steps to show each coat required for system.
   3. Label each coat of each Sample.
   4. Label each Sample for location and application area.

1.3 DELIVERY, STORAGE, AND HANDLING

A. Store materials not in use in tightly covered containers in well-ventilated areas with ambient temperatures continuously maintained at not less than 45 deg F.
   1. Maintain containers in clean condition, free of foreign materials and residue.
   2. Remove rags and waste from storage areas daily.

1.4 FIELD CONDITIONS

A. Apply paints only when temperature of surfaces to be painted and ambient air temperatures are between 50 and 95 deg F.

B. Do not apply paints when relative humidity exceeds 85 percent; at temperatures of less than 5 deg F above the dew point; or to damp or wet surfaces.

PART 2 - PRODUCTS

2.1 MANUFACTURERS

A. Manufacturers: Subject to compliance with requirements, provide products by one of the following:
   1. Benjamin Moore & Co.
   2. PPG Paints.
   3. Sherwin-Williams Company (The).

B. Source Limitations: Obtain each paint product from single source from single manufacturer.

2.2 PAINT PRODUCTS, GENERAL

A. Material Compatibility:
1. Materials for use within each paint system shall be compatible with one another and substrates indicated, under conditions of service and application as demonstrated by manufacturer, based on testing and field experience.
2. For each coat in a paint system, products shall be recommended in writing by topcoat manufacturers for use in paint system and on substrate indicated.

B. Colors: As indicated in a color schedule.

2.3 INTERIOR PRIMERS

A. Interior Ferrous-Metal Primer: Factory-formulated quick-drying rust-inhibitive alkyd-based metal primer.
1. Sherwin-Williams; Pro-Cryl Universal Metal Primer B66-310 Series: Applied at a dry film thickness of not less than 3.0 mils.

2.4 INTERIOR FINISH COATS

A. Interior Semigloss Acrylic Enamel: Factory-formulated semigloss latex enamel for interior application.
1. Sherwin-Williams; ProMar 200 Zero VOC Interior Latex Semi-Gloss Enamel B31W02651 Series: Applied at a dry film thickness of not less than 1.3 mils.

PART 3 - EXECUTION

3.1 EXAMINATION

A. Examine substrates and conditions, with Applicator present, for compliance with requirements for maximum moisture content and other conditions affecting performance of the Work.

B. Verify suitability of substrates, including surface conditions and compatibility, with existing finishes and primers.

C. Proceed with coating application only after unsatisfactory conditions have been corrected.
1. Application of coating indicates acceptance of surfaces and conditions.

3.2 PREPARATION

A. Comply with manufacturer's written instructions and recommendations applicable to substrates and paint systems indicated.

B. Remove hardware, covers, plates, and similar items already in place that are removable and are not to be painted. If removal is impractical or impossible because of size or weight of item, provide surface-applied protection before surface preparation and painting.
   1. After completing painting operations, use workers skilled in the trades involved to reinstall items that were removed. Remove surface-applied protection if any.

C. Clean substrates of substances that could impair bond of paints, including dust, dirt, oil, grease, and incompatible paints and encapsulants.
   1. Remove incompatible primers and reprime substrate with compatible primers or apply tie coat as required to produce paint systems indicated.

D. Steel Substrates: Remove rust, loose mill scale, and shop primer, if any. Clean using methods recommended in writing by paint manufacturer.

E. Shop-Primed Steel Substrates: Clean field welds, bolted connections, and areas where shop paint is abraded. Paint exposed areas with the same material as used for shop priming to comply with SSPC-PA 1 for touching up shop-primed surfaces.

3.3 INSTALLATION

A. Apply paints according to manufacturer's written instructions.
   1. Use applicators and techniques suited for paint and substrate indicated.
   2. Paint surfaces behind movable equipment and furniture same as similar exposed surfaces. Before final installation, paint surfaces behind permanently fixed equipment or furniture with prime coat only.
   3. Paint front and backsides of access panels, removable or hinged covers, and similar hinged items to match exposed surfaces.
   4. Do not paint over labels of independent testing agencies or equipment name, identification, performance rating, or nomenclature plates.
   5. Primers specified in painting schedules may be omitted on items that are factory primed or factory finished if acceptable to topcoat manufacturers.

B. Tint each undercoat a lighter shade to facilitate identification of each coat if multiple coats of same material are to be applied. Tint undercoats to match color of topcoat, but provide sufficient difference in shade of undercoats to distinguish each separate coat.

C. If undercoats or other conditions show through topcoat, apply additional coats until cured film has a uniform paint finish, color, and appearance.

D. Apply paints to produce surface films without cloudiness, spotting, holidays, laps, brush marks, roller tracking, runs, sags, ropiness, or other surface imperfections. Cut in sharp lines and color breaks.

3.4 FIELD QUALITY CONTROL

A. Dry-Film Thickness Testing: Owner may engage the services of a qualified testing and inspecting agency to inspect and test paint for dry-film thickness.
   1. Contractor shall touch up and restore painted surfaces damaged by testing.

2. If test results show that dry-film thickness of applied paint does not comply with paint manufacturer's written recommendations, Contractor shall pay for testing and apply additional coats as needed to provide dry-film thickness that complies with paint manufacturer's written recommendations.

3.5 CLEANING AND PROTECTION

A. At end of each workday, remove rubbish, empty cans, rags, and other discarded materials from Project site.
   1. Do not clean equipment with free-draining water and prevent solvents, thinners, cleaners, and other contaminants from entering into waterways, sanitary and storm drain systems, and ground.
   2. Dispose of contaminants in accordance with requirements of authorities having jurisdiction.
   3. Allow empty paint cans to dry before disposal.
   4. Collect waste paint by type and deliver to recycling or collection facility.

B. After completing paint application, clean spattered surfaces. Remove spattered paints by washing, scraping, or other methods. Do not scratch or damage adjacent finished surfaces.

C. Protect work of other trades against damage from paint application. Correct damage to work of other trades by cleaning, repairing, replacing, and refinishing, as approved by Architect, and leave in an undamaged condition.

D. At completion of construction activities of other trades, touch up and restore damaged or defaced painted surfaces.

3.6 INTERIOR PAINTING SCHEDULE

A. Ferrous Metal: Provide the following finish systems over ferrous metal:
   1. Semigloss Acrylic-Enamel Finish: Two finish coats over a primer.
      a. Primer: Interior ferrous-metal primer.
      b. Finish Coats: Interior semigloss acrylic enamel.

END OF SECTION 09 91 23

SECTION 21 05 00 - BASIC FIRE SUPPRESSSION REQUIREMENTS

PART 1 - GENERAL

1.1 ROUGHING

A. The Contract Drawings have been prepared in order to convey design intent and are diagrammatic only. Drawings shall not be interpreted to be fully coordinated for construction.

B. Due to small scale of Drawings, it is not possible to indicate all offsets, fittings, changes in elevation, interferences, etc. Make necessary changes in contract work, equipment locations, etc., as part of a contract to accommodate work to avoid obstacles and interferences encountered. Before installing, verify exact location and elevations at work site. **DO NOT SCALE** plans. If field conditions, details, changes in equipment or shop drawing information require an important rearrangement, report same to Owner's Representative for review. Obtain written approval for all major changes before installing.

C. Install work so that items both existing and new are operable and serviceable. Eliminate interference with removal of coils, motors, filters, belt guards and/or operation of doors. Provide easy, safe, and code mandated clearances at controllers, motor starters, valve access, and other equipment requiring maintenance and operation. Provide new materials, including new piping and insulation for relocated work.

D. Coordinate work with other trades and determine exact route or location of each duct, pipe, conduit, etc., before fabrication and installation. Coordinate with Architectural Drawings. Obtain from Owner's Representative exact location of all equipment in finished areas, such as thermostat, fixture, and switch mounting heights, and equipment mounting heights. Coordinate all work with the architectural reflected ceiling plans and/or existing Architecture. Mechanical and electrical drawings show design arrangement only for diffusers, grilles, registers, air terminals, lighting fixtures, sprinklers, speakers, and other items. Do not rough-in contract work without reflected ceiling location plans.

E. Before roughing for equipment furnished by Owner or in other Divisions, obtain from Owner and other Divisions, approved roughing drawings giving exact location for each piece of equipment. Do not "rough in" services without final layout drawings approved for construction. Cooperate with other trades to insure proper location and size of connections to insure proper functioning of all systems and equipment. For equipment and connections provided in this contract, prepare roughing drawing as follows:

1. Existing Equipment: Measure the existing equipment and prepare for installation in new location.

2. New Equipment: Obtain equipment roughing drawings and dimensions, then prepare roughing-in-drawings. If such information is not available in time, obtain an acknowledgement in writing, then make space arrangements as required with Owner's Representative.

1.2 EQUIPMENT AND MATERIAL REQUIREMENTS

A. Provide materials that meet the following minimum requirements:

1. Materials shall have a flame spread rating of 25 or less and a smoke developed rating of 50 or less, in accordance with NFPA 255.

2. All equipment and material for which there is a listing service shall bear a UL label.

3. Potable water systems and equipment shall be built according to AWWA Standards.

4. Gas-fired equipment and system shall meet AGA Regulations and shall have AGA label.

5. All electrical equipment and systems, as a whole, shall be tested and listed by an OSHA approved Nationally Recognized Testing Laboratory (NRTL) for the intended use in accordance with the applicable standards and have a physical label indicating such.

1.3 CONCEALMENT

A. **Conceal all contract work** above ceilings and in walls, below slabs, and elsewhere throughout building. If concealment is impossible or impractical, notify Owner's Representative before starting that part of the work and install only after their review. In areas with no ceilings, install only after Owner's Representative reviews and comments on arrangement and appearance.

1.4 CHASES

A. New Construction:

1. Certain chases, recesses, openings, shafts, and wall pockets will be provided as part of General Construction Trade. Mechanical and Electrical trades shall provide all other openings required for their contract work.

2. Check Architectural and Structural Design and Shop Drawings to verify correct size and location for all openings, recesses and chases in general building construction work.

3. Assume responsibility for correct and final location and size of such openings.

4. Rectify improperly sized, improperly located or omitted chases or openings due to faulty or late information or failure to check final location.

5. Provide 18 gauge galvanized sleeves and inserts. Extend all sleeves 2 in. above finished floor. Set sleeves and inserts in place ahead of new construction, securely fastened during concrete pouring. Correct, by drilling, omitted or improperly located sleeves. Assume responsibility for all work and equipment damaged during course of drilling. Firestop all unused sleeves.

6. Provide angle iron frame where openings are required for contract work, unless provided by General Construction trade.

B. In Existing Buildings:

1. Drill holes for floor and/or roof slab openings.

2. Multiple pipes smaller than 1 in. properly spaced and supported may pass through one 6 in. or smaller diameter opening.

3. Seal voids in fire rated assemblies with a fire-stopping seal system to maintain the fire resistance of the assembly. Provide 18 gauge galvanized sleeves at fire rated assemblies. Extend sleeves 2 in. above floors.

4. In wall openings, drill or cut holes to suit. Provide 18 gauge galvanized sleeves at shafts and fire rated assemblies. Provide fire-stopping seal between sleeves and wall in drywall construction. Provide fire stopping similar to that for floor openings.

1.5 PENETRATION FIRESTOPPING

A. Fire-Stopping for Openings Through Fire and Smoke Rated Wall and Floor Assemblies:

1. Provide materials and products listed or classified by an approved independent testing laboratory for "Penetration Fire-Stop Systems". The system shall meet the requirements of "Fire Tests of Penetrations Fire-Stops" designated ASTM E814.

2. Provide fire-stop system seals at all locations where piping, tubing, conduit, electrical busways/cables/wires, ductwork and similar utilities pass through or penetrate fire rated wall or floor assembly. Provide fire-stop seal between sleeve and wall for drywall construction.

3. The minimum required fire resistance ratings of the wall or floor assembly shall be maintained by the fire-stop system. The installation shall provide an air and watertight seal.

4. The methods used shall incorporate qualities which permit the easy removal or addition of electrical conduits or cables without drilling or use of special tools. The product shall adhere to itself to allow repairs to be made with the same material and permit the vibration, expansion, and/or contraction of any items passing through the penetration without cracking, crumbling and resulting reduction in fire rating.

5. Plastic pipe/conduit materials shall be installed utilizing intumescent collars.

6. Provide a submittal including products intended for use, manufacturer's installation instructions, and the UL details for all applicable types of wall and floor penetrations.

7. Fire-stopping products shall not be used for sealing of penetrations of non-rated walls or floors.

B. Acceptable Manufacturers:

1. Dow Corning Fire-Stop System Foams and Sealants.

2. Nelson Electric Fire-Stop System Putty, CLK and WRP.

3. S-100 FS500/600, Thomas & Betts.

4. Carborundum Fyre Putty.

5. 3-M Fire Products.

6. Hilti Corporation.

1.6 ACCESS PANELS

A. Provide access panels for required access to respective trade's work. Location and size shall be the responsibility of each trade. Access panels provided for equipment shall provide an opening not smaller than 22 in. by 22 in. Panels shall be capable of opening a minimum of 90 degrees. Bear cost of construction changes necessary due to improper information or failure to provide proper information in ample time. Access panels over 324 square inches shall have two cam locks. Provide proper frame and door type for various wall or ceiling finishes. Access panels shall be equal to "Milcor" as manufactured by Inland Steel Products Co., Milwaukee, Wisconsin. Provide General Construction trade with a set of architectural plans with size and locations of access panels.

1.7 CONCRETE BASES

A. Provide concrete bases for all floor mounted equipment. Provide 3,000 lb. concrete, chamfer edges, trowel finish, and securely bond to floor by roughening slab and coating with cement grout. Bases 4 in. high (unless otherwise indicated); shape and size to accommodate equipment. Provide anchor bolts in equipment bases for all equipment provided for the project, whether mounted on new concrete bases or existing concrete bases.

1.8 HVAC EQUIPMENT CONNECTIONS

A. Contractor is responsible for draining, filling, venting, chemically treating and restarting any systems which are affected by work shown on the Contract Documents unless specifically noted otherwise.

B. Provide final connections to all equipment as required by the equipment. Provide final connections, including domestic water piping, wiring, controls, and devices from equipment to outlets left by other trades. Provide equipment waste, drip, overflow and drain connections extended to floor drains.

C. Provide for Owner furnished and Contractor furnished equipment all valves, piping, piping accessories, traps, pressure reducing valves, gauges, relief valves, vents, drains, insulation, sheet metal work, controls, dampers, as required.

D. Refer to manufacturer drawings and specifications for requirements of laboratory equipment and special equipment. Verify connection requirements before bidding.

1.9 PLUMBING EQUIPMENT CONNECTIONS

A. Contractor is responsible for draining, filling, venting, chemically treating and restarting any systems which are affected by work shown on the Contract Documents unless specifically noted otherwise.

B. Provide roughing and final connections to all equipment. Provide loose key stops, sanitary "P" traps, tailpiece, adapters, gas or air cocks, and all necessary piping and fittings from roughing point to equipment. Provide installation of sinks, faucets, traps, tailpiece furnished by others. Provide cold water line with gate valve and backflow prevention device at locations called for. Provide continuation of piping and connection to equipment that is furnished by others. Provide relief valve discharge piping from equipment relief valves.

C. Provide valved water outlet adjacent to equipment requiring same. Provide equipment type floor drains, or drain hubs, adjacent to equipment.

D. Install controls and devices furnished by others.

E. Refer to Contract Documents for roughing schedules, and equipment and lists indicating scope of connections required.

F. Provide for Owner furnished and Contractor furnished equipment all valves, piping, piping accessories, traps, pressure reducing valves, gauges, relief valves, vents, drains, as required.

G. Refer to Manufacturer drawings and specifications for requirements of laboratory equipment and special equipment. Verify connection requirements before bidding.

1.10 ELECTRICAL EQUIPMENT CONNECTIONS

A. Provide complete power connections to all electrical equipment. Provide control connections to equipment. Heavy duty NEC rated disconnect ahead of each piece of equipment. Ground all equipment in accordance with NEC.

B. Provide for Owner furnished and Contractor furnished equipment all power wiring, electric equipment, control wiring, switches, lights, receptacles, and connections as required.

C. Refer to Manufacturer's drawings/specifications for requirements of laboratory equipment and special equipment. Verify connection requirements before bidding.

END OF SECTION 21 05 00

SECTION 21 05 23 - VALVES

PART 1 - GENERAL

1.1 WORK INCLUDED

A. Provide labor, materials, equipment and services to perform operations required for the complete installation and related Work as required in Contract Document.

1.2 SUBMITTALS

A. Submit manufacturer's data in accordance with Basic Mechanical/Electrical Requirements. Obtain approval prior to ordering material.

B. Provide submittals for all items specified under Part 2 of this section.

PART 2 - PRODUCTS

2.1 VALVES

A. General: Valves shall have the following requirements:

1. Working pressure stamped or cast on bodies.

2. Stem packing serviceable without removing valve from line.

3. UL listed and FM approved and labeled for intended fire protection service. Sprinkler systems 175 WWP;

B. Acceptable Manufacturers:

1. Gate Valves: Kennedy, Mueller, Nibco, Stockham, Victaulic.

2. Butterfly/Ball Valves, Indicating Type: Grinnell, Kennedy, Milwaukee, Stockham, Victaulic.

3. Check Valves: Grinnell, Kennedy, Nibco, Stockham, Victaulic.

2.2 GATE VALVES

A. 2-1/2 in. and Larger: IBBM, resilient wedge disc, OS&Y, flanged ends, stems grooved for tamper switch, 200 WWP; Stockham Fig. G-610.

B. 2 in. and Smaller: Bronze body and bonnet, OS&Y, threaded ends, solid wedge, 175 WWP; Stockham Fig. B-133.

2.3 BUTTERFLY/BALL VALVE

A. 2-1/2 in. and Larger: Butterfly style, ductile iron body, lug type, aluminum bronze disc, stainless steel trim, EPDM seat, bubbletight shutoff, suitable for dead end service, gear operator, provision for tamper switch, 200 WWP; Stockham #LD-72UF.

B. 2-1/2 in. and Larger: Butterfly style, ductile iron body, ductile iron disc coated with EPDM, bubbletight shutoff, suitable for dead end service, gear operator, provision for tamper switch, grooved ends, 300 WWP; Victaulic Series 705W.

C. 2 in. and Smaller: Bronze body, threaded ends; indicating gear operator, provision for tamper switch; Milwaukee "Butterball".

2.4 CHECK VALVES

A. 2-1/2 in. and Larger: Ductile iron body, aluminum bronze or ductile iron disc coated with EPDM, hinged to a removable access cover for inspection and maintenance, stainless steel shaft and spring, grooved ends, 250 WWP; Viking Model G-1 Swing Check Valve.

B. 2 in. and Smaller: Bronze body, swing type, rubber faced, threaded ends; Grinnell #3315.

2.5 MISCELLANEOUS

A. Trim and Test Valves: Ball, plug, angle or globe type; bronze body; threaded ends; UL listed.

1. Ball Valves: Bronze two-piece body, full port, threaded ends, chrome plated ball, blowout proof stem, reinforced TFE seats, 300 psi working pressure, UL listed, FM approved; Nibco Model KT-585-70-UL.

B. Hose Thread Drain Valves:

1. Ball Valve: Bronze body, hardened chrome ball with hose thread end, cap and chain; Watts #B6001CC (sweat connection), Watts #B6000CC (threaded connection).

PART 3 - EXECUTION

3.1 INSTALLATION

A. Provide all shutoff, check, drain and other type valves as required by Code as indicated and as required for proper system maintenance, isolation and safety.

B. Locate valves for easy access and provide separate support where necessary. Install valves with stems at or above the horizontal position. Install swing check valves in horizontal position with hinge pin level.

C. Provide hose thread drain valves at all low points to enable complete drainage of all portions of the system.

D. Install valves per respective listing/approval.

E. Use 250 WWP, FM approved anti-water hammer check valves at discharge and bypass of fire pumps, otherwise use swing type.

F. Grooved joints shall be installed in accordance with the manufacturer's latest published instructions. The gasket style and elastomeric material (grade) shall be verified as suitable for the intended service. Gaskets shall be molded and produced by the grooved coupling manufacturer. Grooved ends shall be clean and free from indentations, projections, and roll marks in the area from pipe end to groove. Grooved coupling manufacturer's factory trained field representative shall provide on-site training for contractor's field personnel in the proper use of grooving tools, application of groove, and installation of grooved piping products. Factory trained representative shall periodically visit the jobsite to ensure best practices in grooved product installation are being followed. Contractor shall remove and replace any improperly installed products.

G. Use ball valves for auxiliary drains and inspector test valves on dry pipe and pre-action systems.

H. Flushing full-port ball valves shall be provided on underground mains (inside the building) and above-ground mains, cross-mains, branch lines and run outs of new sprinkler systems (wet and dry), to facilitate any future periodic internal inspections, obstruction investigations and as-needed flushing work. Valves shall be sized per NFPA 25, in order to obtain the NFPA required minimum velocity of 10 ft/s for any given pipe size. As an alternative to the hydraulic calculation valve sizing method, the following sizing rules can be applied:

1-inch thru 2 1/2 inch pipe: line-size full-port ball valve
3-inch pipe: one (1) 2 1/2-inch ball valve
4-inch pipe: two (2) 2 1/2-inch ball valves
6-inch pipe: three (3) 2 1/2 inch ball valves
8-inch pipe: four (4) 2 1/2 inch ball valves

END OF SECTION 21 05 23

This page intentionally left blank.

SECTION 21 05 53 - FIRE PROTECTION IDENTIFICATION

PART 1 - GENERAL

1.1 WORK INCLUDED

A. Provide labor, materials, equipment and services as required for the complete installation designed in Contract Documents.

1.2 QUALIFICATIONS

A. All identification devices shall comply with ANSI A13.1 for lettering size, length of color field, colors, and viewing angles.

1.3 SUBMITTALS

A. Submit manufacturer's technical product data and installation instructions for each identification material and device. Submit valve schedule for each piping system typewritten on an 8-1/2 in. x 11 in. paper (minimum), indicating code number, location and valve function. Submit schedule of pipe, equipment and name identification for review before labeling.

1.4 ACCEPTABLE MANUFACTURERS

A. Allen Systems, Inc., Brady (W.H.) Co.; Signmark Div., Emedco, Industrial Safety Supply Co., Inc., Lab Safety Supply, Seton Name Plate Corp.

PART 2 - PRODUCTS

2.1 GENERAL

A. Provide manufacturer's standard products of categories and types required for each application. In cases where there is more than one type specified for an application, selection is installer's option, but provide single selection for each product category.

B. All adhesives used for labels in the interior of the building shall comply with the maximum Volatile Organic Compound (VOC) limits as called for in the current version of U.S. Green Building Council LEED Credits EQ 4.1 and EQ 4.2.

2.2 PIPING IDENTIFICATION

A. Identification Types:

1. Snap-on type: Provide manufacturer's standard pre-printed, semi rigid snap-on, color coded pipe markers, complying with ANSI-A13.1.

2. Pressure sensitive type: Provide manufacturer's standard pre-printed, permanent adhesive, color coded, pressure sensitive vinyl pipe markers complying with ANSI A13.1. Provide a 360° wrap of flow arrow tape at each end of pipe label.

3. Stencil paint: Apply black or yellow stencil paint directly to covering or bare pipe; color to contrast with background. Stencil as follows:

O.D. PIPE OR COVERING	SIZE STENCIL LETTER
3/4 in., 1 in., 1-1/4 in.	1/2 in.
1-1/2 in., 2 in.	3/4 in.
2-1/2 in. and over	1-1/4 in.

B. Lettering:

1. Piping labeling shall conform to the following list:

PIPE FUNCTION	IDENTIFICATION
Fire Protection Water	FIRE PROTECTION WATER
Fire Sprinkler Water	FIRE SPRINKLER WATER

2.3 VALVE IDENTIFICATION

A. Valve Tags:

1. Standard brass valve tags, 2 in. diameter with 1/2 in. high black-filled numerals. Attach to valve with brass jack chain and "S" hook. Identify between fire protection, heating and plumbing services with 1/4 in. letters above the valve number.

2. Equal to Seton Style No. M4507.

B. Provide a sign for each control, sectional and drain valve identifying the portion of the building served in accordance with NFPA 13. Valve Chart:

1. Provide valve chart for all valves provided as a part of this project. Frame and place under clear glass. Mount in Mechanical Room.

2.4 EQUIPMENT IDENTIFICATION

A. General:

1. Provide engraved vinyl nameplates for each major piece of mechanical equipment provided, 2-1/2 in. x 3/4 in. size.

2. Nameplates: Equal to Seton Style No. M4562.

2.5 ABOVE CEILING EQUIPMENT LOCATOR

A. 3/4 in. diameter adhesive stickers placed on ceiling grid and color-coded.

B. The color for all fire protection valves shall be RED.

PART 3 - EXECUTION

3.1 GENERAL

A. Provide valve tags for all valves provided on project.

B. Provide piping identification with directional flow arrows for all piping on project, maximum every 20'-0" or piping installed through rooms, provide at least one pipe label in each room, for each pipe function.

C. Provide equipment tags for all equipment provided.

END OF SECTION 21 05 53

This page intentionally left blank.

SECTION 21 05 54 - PAINTING

PART 1 - GENERAL

1.1 WORK INCLUDED

A. Provide labor, materials, equipment and services required for the complete installation designed in Contract Documents.

1.2 SUBMITTALS

A. Product Data: Manufacturer's technical data sheets for each coating.

1. Material analysis including vehicle type and percentage by weight and by volume of vehicle, resin, and pigment.

2. Application instructions including mixing, surface preparation, compatible primers and topcoats, recommended wet and dry film thickness, recommended application methods.

1.3 GENERAL

A. All primers and paint used in the interior of the building shall comply with the maximum Volatile Organic Compound (VOC) limits called for in the current version of U.S. Green building Council LEED Credits EQ 4.1 and EQ 4.2.

1.4 QUALITY ASSURANCE

A. Materials:

1. All coating materials required by this section shall be provided by a single manufacturer, unless otherwise required or approved.

a. Contractor: Firm with successful experience in painting work similar in scope of work of this project.

b. Maintain throughout duration of the work a crew of painters who are fully qualified to satisfy requirements of the specifications.

PART 2 - PRODUCTS

2.1 MANUFACTURERS

A. Design Make:

1. Sherwin Williams Company.

B. Acceptable Makes:

1. Devoe & Raynolds Company

2. The Glidden Company

3. Benjamin Moore & Company

4. PPG Industries, Inc./Pittsburgh Paints

5. Pratt & Lambert, Inc.

6. Sherwin Williams Company

2.2 PRODUCTS

A. Colors:

1. As selected by Owner.

B. Lead Content:

1. Not more than 0.06 percent lead by weight (calculated as lead metal) in the total nonvolatile content of the paint or the equivalent measure of the lead in the dried film.

PART 3 - EXECUTION

3.1 INSPECTION

A. Verify that surfaces and conditions are ready for work in accordance with coating manufacturer's recommendations.

B. Prior to commencement of work, examine surfaces scheduled to be finished.

C. Report any unsatisfactory conditions in writing.

D. Do not apply coatings to unsatisfactory substrates.

E. Beginning painting work on an area will be deemed construed acceptance of surfaces in that area.

3.2 SCOPE

A. Fire protection components shall be painted by the Fire Protection Contractor.

B. All painting shall consist of one (1) prime coat and two (2) finish coats of non-lead oil base paint, unless otherwise indicated herein. Provide galvanized iron primer for all galvanized surfaces. All surfaces must be thoroughly cleaned before painting. See schedule for color code.

C. Paint all hangers, rods and any other bare iron work in all exposed areas.

D. Paint all exterior metal or iron including all piping, supporting metals, etc., unless furnished with a factory finish. This shall include galvanized steel. Paint with galvanized primer and finish with epoxy of color selected by Architect. Exterior metal painting shall include all exposed plumbing piping, fittings, valves, etc.

E. Paint bare metal and touch up damaged finish on all fire protection equipment. Use heat resistant paint on all hot surfaces.

F. Paint all insulated and bare piping exposed to view in all areas.

G. Paint all uninsulated water pump casings and piping connections.

H. All items installed after finished painting is completed and any damaged factory finish paint on equipment furnished under this contact must be touched up by Contractor responsible for same.

3.3 SURFACE PREPARATION

A. Apply coatings to surfaces that are clean and properly prepared in accordance with manufacturer's instructions and as herein specified. Remove dirt, dust, grease, oils and foreign matter. Prepare surface for proper texture necessary to optimum coating adhesion and intended finished appearance. Plan cleaning, preparation, and coating operations to avoid contamination of freshly coated surfaces.

B. Provide protection for non-removable items not called for coating. After application of coatings, install removed items. Use only skilled workmen for removal and replacement of such items.

C. Protect surfaces not called for coating. Clean, repair, or replace to the satisfaction of the Engineer/Owner's Representative any surfaces inadvertently spattered or coated.

D. Metal Work:

1. Remove all oil and grease with non-flammable solvent. Remove all rust with steel wool.

2. Patched Areas, Touch-up Areas. Clean and prepare all surfaces as required to provide a smooth, even substrate for proper application of finish.

3. Contractor must examine areas and conditions under which paint is to be applied and notify Engineer in writing of conditions detrimental to proper and timely completion of work. Do not proceed until unsatisfactory conditions have been corrected.

3.4 APPLICATION

A. General:

1. Apply coatings in accordance with coating manufacturer's instructions and using application method best suited for obtaining full, uniform coverage of surfaces to be coated.

2. Apply successive coats after adequate cure of the preceding coat and within the recommended recoating time.

3. Complete coatings shall be free of defects such as runs, sags, variations in color, lap or brush marks, holidays, and skips.

B. Remove coatings not in compliance with this specification, re-clean and re-prepare surfaces as specified, and apply coatings to comply with the contract documents.

3.5 SCHEDULE OF COATINGS FOR METAL SURFACES

A. Porous Surface:

1. The coating shall be Tough-Coat as manufactured by VAC Systems Industries, Foster 40-10, 40-20, or 40-23 as manufactured by Foster Products Corporation, or approved equal. Coating shall meet NFPA Standard 90A and 90B and contain an anti-microbial agent.

B. Non-Porous Surface:

1. The paint shall be Porta-Sept as manufactured by Porter Paints, Inc., Foster 40-26 as manufactured by Foster Products Corporation or approved equal. Paint shall contain an EPA registered anti-microbial, Intercept, which inhibits the growth of bacteria, mold, mildew and fungi.

3.6 COLOR CODING

A. Pipe coloring shall conform to the following schedule:

Piping System	Safety Color
Fire Protection	RED

B. Existing Facility Buildings: Color code to match facility's color code.

END OF SECTION 21 05 54

SECTION 21 10 10 - PIPING SYSTEMS AND ACCESSORIES

PART 1 - GENERAL

1.1 WORK INCLUDED

A. Provide labor, materials, equipment and services to perform operations required for the complete installation and related Work as required in Contract Documents.

1.2 SUBMITTALS

A. Provide a schedule of pipe materials, fittings and connections.

B. Provide a detailed matrix listing the specific UL approved firestop system assembly to be used for each type of piping provided and each type of construction to be penetrated along with all associated UL assembly details.

PART 2 - PRODUCTS

2.1 GENERAL

A. Pipe and fittings shall be new, marked with manufacturer's name and comply with applicable ASTM and ANSI Standards.

2.2 STEEL PIPING AND FITTINGS

A. Pipe: ASTM A53, or ASTM A106 seamless, Schedule 40 weight; black steel pipe; ends chamfered for welding or grooved for grooved mechanical connections.

B. Fittings: Same material and pressure class as adjoining pipe.

1. Welded Fittings: Factory forged, seamless construction, butt weld type chamfered ends. Where branch connections are two or more sizes smaller than main size, use of "Weldolets", "Thredolets" or "Sockolets" acceptable. Mitered elbows, "shaped" nipples, and job fabricated reductions not acceptable unless specifically called for. Socket weld type, 2000 psi wp, where called for.

2. Threaded Fittings: Class 125, cast or malleable iron, black , as called for; UL listed and FM approved for fire protection systems. Street type 45° and 90° elbows are not acceptable.

C. Flanges, Unions, and Couplings:

1. Threaded Connections:

a. Flanges: Cast iron companion type; for sizes 2-1/2 in. and larger.

b. Unions: Malleable iron, bronze to iron seat, 300 lb. wwp; for sizes 2 in. and smaller.

c. Couplings: Malleable iron. Steel thread protectors are not acceptable as couplings.

2. Welded Connections:

a. Flanges: Welding neck type. Slip-on type not allowed unless noted and shall not be installed in conjunction with butterfly valves.

3. Grooved Mechanical Connections:

a. Couplings: Ductile iron, ASTM A395 and ASTM A536, with painted coating, designed for rolled grooved piping,

b. Gaskets: Grade "E" EPDM synthetic rubber, -30°F to 230°F temperature range, suitable for water service.

c. Bolts and Nuts: Heat treated, hex head carbon steel, ASTM A183, cadmium plated or zinc electroplated.

d. Fittings: Elbows, tees, laterals, reducers, adapters as required shall be ductile iron conforming to ASTM A395 and A536. Fittings shall have grooves designed to accept grooved end couplings of the same manufacturer.

e. Victaulic, rigid system, Style 009 couplings cast with offsetting angle pattern bolt pads to provide system rigidity and support in accordance with ANSI B31.1 and B 31.9. UL listed and FM approved; 300 psi wwp; use a gasket and coupling system similar to Victaulic Flush-Seal for all dry type systems; follow all terms of listings/approvals.

f. Acceptable Manufacturers: Victaulic or approved equal.

D. Gauge and Instrument Connections: Nipples and plugs for adapting gauges and instruments to piping system shall be IPS brass.

E. Base Elbows:

1. Cast iron or steel type, flange connections; Crane 500 or equivalent made from welding elbows, with welded pipe support and steel base. Reducing elbows where necessary.

ELBOW SIZE	SUPPORT SIZE	BASE PLATE
Up to 3 in.	1-1/4 in.	6 in. x 6 in. x 1/4 in.
4 in. to 6 in.	2-1/2 in.	8 in. x 8 in. x 1/4 in.

ELBOW SIZE	SUPPORT SIZE	BASE PLATE
8 in. and larger	6 in.	14 in. x 14 in. x 5/16 in.

2. Anchor bolt holes in each corner of base for securely bolting to floor or concrete base; minimum 3/4 in. bolts.

2.3 HANGERS, INSERTS AND SUPPORTS

A. Hangers, Inserts, Clamps: B-Line, Grinnell, Michigan Hanger, PHD Manufacturing.

B. Hangers:

1. Adjustable, wrought malleable iron or steel with electroplated zinc or cadmium finish. Copper plated or PVC coated where in contact with copper piping. Hot-dipped galvanized finish for exterior locations.

2. Adjustable ring type where piping is installed directly on hanger for piping 3 in. and smaller.

3. Adjustable steel clevis type for piping 4 in. and larger.

4. Nuts, washers and rods with electroplated zinc or cadmium finish. Hot-dipped galvanized finish for exterior locations.

C. Spacing Schedule (Maximum Distance between Hangers (ft.-in.):

NOMINAL PIPE SIZE (IN.)	3/4	1	1-1/4	1-1/2	2	2-1/2	3	3-1/2	4	5	6	8
Steel Pipe	N/A	12-0	12-0	15-0	15-0	15-0	15-0	15-0	15-0	15-0	15-0	15-0
Copper Tube	8-0	8-0	10-0	10-0	12-0	12-0	12-0	12-0	15-0	15-0	15-0	15-0
Rod Size (in.)	3/8	3/8	3/8	3/8	3/8	3/8	3/8	3/8	3/8	1/2	1/2	1/2

D. Beam Attachments:

1. C-Clamp style, locknut, restraining strap, electroplated finish, UL listed, FM approved for pipe sizes 2 in. and smaller, complying with NFPA 13.

2. Center loaded style with clamp attachments that engage both edges of beam, electroplated finish, UL listed, FM approved, for pipe sizes larger than 2 in., refer to "Supports" for additional requirements, complying with NFPA 13.

E. Inserts: Carbon steel body and square insert nut, galvanized finish, maximum loading 1300 lbs., for 3/8 in. to 3/4 in. rod sizes, reinforcing rods on both sides, MSS-SP-69 Type 19 or approved equal, complying with NFPA 13 Supports:

1. For all piping larger than 2 in., provide intermediate structural steel members for hanger attachment. Members shall span across the bar joists at panel points of joists. Secure member to structure. Select size of members based on a minimum factor of safety of four.

2. For weights under 1,000 lbs.: "Drill-In" inserts, "U" shaped Channel, beam clamps or other structurally reviewed support. The factor of safety shall be at least four. Follow manufacturer's recommendations.

3. For Metal Decks: Drill hole through for hanger rods and imbed a welded plate in concrete or use devices designed for this application, with a safety factor of four.

4. Acceptable Manufacturers: Hilti, ITW Ramset, Phillips "Red Head" or approved equal.

F. Hangers for fire protection piping as specified and in accordance with NFPA 13. Hangers and building attachments shall be UL listed and FM approved for fire protection service. Adjustable swivel ring type hangers are permitted for 3 in. and smaller piping.

2.4 PIPING ACCESSORIES

A. Escutcheon Plates: Steel or cast brass, split hinge type with setscrew, high plates where required for extended sleeves. Chrome plated in finished areas.

B. All bushings and nipples required for instruments and gauges shall be brass.

2.5 SLEEVES

A. Standard Type:

1. Schedule 40 black steel pipe sleeves for structural surfaces, two (2) pipe sizes larger than the pipe, and as recommended by the sealing element manufacturer. Provide full circle water stop collar for sleeves located within below grade walls, wet wells and waterproofed surfaces. The collar shall be fabricated from steel plate and welded to the sleeve around its entire circumference.

2. Schedule 40 PVC sleeves or sheet metal sleeves for nonstructural surfaces and existing construction. Sheet metal sleeves shall be 18 gauge minimum and braced to prevent collapsing.

2.6 SEALING ELEMENTS

A. Expanding neoprene link type, watertight seal consisting of interlocking links with zinc plated bolts.

1. Acceptable Manufacturers: Thunderline "Link-Seal" Series 200, 300 or 400, Pyropac, Calipco.

2.7 FIRESTOP SYSTEM FOR OPENINGS THROUGH FIRE RATED WALL AND FLOOR ASSEMBLIES

A. Materials for firestopping seals shall be listed by an approved independent testing laboratory for "Through-Penetration Firestop Systems". The system shall meet the standard fire test for Through-Penetration Firestop Systems designated ASTM E814. Firestop system seals shall be provided at locations where piping pass through fire rated wall, floor/ceiling, or ceiling/roof assembly. Minimum required fire resistant ratings of the assembly shall be maintained by the Firestop System. Installation shall conform to the manufacturer's recommendations and other requirements necessary to meet the testing laboratory's listing for the specific installation.

2.8 PIPING MATERIALS AND SCHEDULE

A. See Exhibit "A" - Piping Materials at end of this Section for Fire Protection piping.

B. See Exhibit "B" - Testing at end of this Section for Fire Protection piping.

PART 3 - EXECUTION

3.1 EQUIPMENT AND SYSTEMS

A. Install equipment and systems in accordance with provisions of each applicable section of these Specifications, and Local/State Codes/Regulations having jurisdiction. Accurately establish grade and elevation of piping before setting sleeves. Install piping without springing or forcing, except where specifically called for, making proper allowance for expansion and anchoring. Changes in size shall be made with reducing fittings. Reducing couplings are not acceptable. Arrange piping at equipment with necessary offsets, unions, flanges, and valves, to allow for easy part removal and maintenance. Offset piping and change elevation as required, to coordinate with other work. Avoid contact with other mechanical or electrical systems. Provide adequate means of draining and venting systems. Conceal piping unless otherwise called for.

B. Copper tubing shall be cut with a wheeled tubing cutter or other approved copper tubing cutter tool. The tubing must be cut square to permit proper joining with the fittings. Ream pipes after cutting and clean before installing.

C. Cap or plug equipment and pipe openings during construction. Install piping parallel with lines of building, properly spaced to provide clearance for insulation. Make changes in direction and branch connections with fittings. Do not install valves, unions and flanges in inaccessible locations. Materials within a system and between systems shall be consistent. If this is not possible, install dielectric fittings.

3.2 PIPING OVER ELECTRICAL EQUIPMENT

A. Contractor shall route piping to avoid installation directly over electric equipment, including, but not limited to panels, transformers, disconnects, starters, motor control center, adjustable speed drives and fused switches.

B. Piping shall not be installed in the dedicated electric and working space as defined by NEC 110. Dedicated electrical space is generally equal to the depth and width of electrical equipment, and extends 6 ft. above the electrical equipment, or to a structural ceiling. Dedicated working space is a minimum of 30 in. wide or the width of equipment (whichever is larger) a minimum of 6 ft.-6 in. tall, with a depth of 3ft. to 9 ft. depending on the voltage.

3.3 HANGERS, INSERTS AND SUPPORTS

A. Piping shall not be supported by wires, band iron, chains, from other piping, or by vertical expansion bolts. Support piping with individual hangers from concrete inserts, wood construction, welded supports, or beam clamps of proper configuration and loading design requirements for each location; replace if not suitable. Follow manufacturer's safe loading recommendations. Suspend with rods of sufficient length for swing and of size called for, using four (4) nuts per rod. Provide additional structural steel members, having one coat rustproof paint, where required for proper support. Provide oversized hangers on diesel engine exhaust piping where insulation/supports must pass between pipe and hanger. Hangers, when attached to joists, shall only be placed at the top or bottom chord panel point. Only concentric type hangers are permissible on piping larger than 2-1/2 in.; "C" types are permitted for piping 2 in. and smaller on joists. Provide riser clamps for each riser at each floor.

3.4 PIPE CONNECTIONS

A. Threaded Connections: Clean out tapering threads, made up with pipe dope; screwed until tight connection. Pipe dope must be specifically selected for each application.

B. Grooved Mechanical Joints: Pipes joined with grooved fittings shall be joined by a listed combination of fittings, couplings, gaskets and grooves of a single manufacturer. Lubricate and install gasket and couplings. Follow manufacturer's recommendations. Grooved ends shall be clean and free of indentations, projections and roll marks in the area from pipe end to groove.

3.5 WELDING

A. Welding shall be performed in compliance with the welding procedure specifications prepared by the National Certified Pipe Welding Bureau. Welded piping fabricated by qualified welder. Use certified welder where specifically required by code or insurance company. If indicated and permitted for fire protection systems, all provisions for welded pipe shall additionally be in accordance with NFPA Standard 13. Use full length pipe where possible; minimum distance between welds, 18 in. on straight runs. Welds must be at least full thickness of pipe with inside smooth and remove cutting beads, slag and excess material at joints; chamfer ends. Minimum gap 1/8 in., maximum 1/4 in., for butt welds. Overlaps on position and bench welds to be not less than 3/4 in. One internal pass and one external pass minimum required on slip-on flanges. Do not apply heat to rectify distorted pipe due to concentrated welding; replace distorted pipe.

3.6 SLEEVES

A. Provide for pipes passing through floors, walls or ceilings. Not required for floors that are core-drilled, except where floor is waterproofed. Extend 1/8 in. above finished floor in finished areas. In above grade Mechanical Rooms and other areas with floor drains use steel pipe sleeves 2 in. above floor. Use steel pipe sleeves in bearing wall, structural slabs, beams and other structural surfaces, and where called for. Sleeves shall be as small as practical, consistent with insulation, so as to preserve fire rating. Fill abandoned sleeves with concrete. Provide rubber grommet seals for pipes passing through ducts or air chambers or built-up housings.

3.7 SLEEVE PACKING

A. Seal void space at sleeves as follows:

1. Interior locations: Firmly pack with fiberglass and caulk.

2. Exterior walls above grade: Use sealing element.

3. Exterior walls below grade and above floors: Use sealing element.

4. Cored holes: Use sealing element.

5. Fire rated, partitions and floor slabs: Use fire rated sealing elements, materials and methods. Provide per manufacturer's instructions to maintain firestop.

6. Waterproofed walls/floors: Use waterproof sealing element, device or compound.

3.8 ESCUTCHEON PLATES

A. Provide polished chrome setscrew type escutcheon plates for all exposed piping passing through floors, walls or ceilings, in all rooms except in Boiler, Fan and Mechanical Rooms.

3.9 TESTS

A. Fire suppression systems shall be hydrostatically tested at 200 psi for two (2) hours in accordance with NFPA 13.

B. Provide all necessary items to complete proper testing of work. Perform all testing in accordance with governing Codes, local utilities and other agencies having jurisdiction and as specified. Pay all costs to perform tests. Perform all testing in a safe manner. Isolate existing systems.

3.10 PIPE LINE SIZING

A. Pipe sizes called for are to be maintained. Pipe size changes made only as reviewed by Owner's Representative and shall be justified by hydraulic calculations. Where discrepancy in size occurs, the larger size shall be provided.

EXHIBIT "A" - PIPING MATERIALS
(Notes at end of Exhibit "A")

SERVICE	PIPE MATERIALS	FITTINGS	CONNECTIONS
Sprinkler (wet)	Schedule 40, black steel, 2 in. and smaller	Cast or malleable iron	Threaded
	Schedule 40, black steel 2-1/2 in. and larger	Ductile iron	Roll grooved mechanical type couplings
Sprinkler pre-action	Schedule 40, black steel, 2 in. and smaller	Cast or malleable iron	Threaded
	Schedule 40, black steel, 2-1/2 in. and larger	Ductile iron	Roll grooved mechanical type couplings

NOTES FOR EXHIBIT A:

NOTE 1: Provide schedule 40 galvanized steel pipe and fittings for all aboveground exterior locations passing through exterior walls such as downstream of inspector's test and auxiliary drain valves, between fire department connection and associated check valve, and where called for.

NOTE 3: Pre-Action piping systems shall be pitched as described in NFPA 13 to facilitate the removal of moisture from the system to minimize internal corrosion. Provide auxiliary drains as required to assure entire system is drainable.

EXHIBIT "B" - TESTING

SERVICE	TEST REQUIREMENTS
Sprinklers	Test hydrostatically at 200 psi for two (2) hours in accordance with NFPA 13.

END OF SECTION 21 10 10

This page intentionally left blank.

SECTION 21 13 00 - FIRE SUPPRESSION SPRINKLER SYSTEMS

PART 1 - GENERAL

1.1 WORK INCLUDED

A. Provide labor, materials, equipment and services to perform operations required for the complete installation and related Work as required in Contract Documents.

1.2 QUALITY ASSURANCE

A. Comply with the 2020 Fire Code of New York State, FM Global Data Sheets, Cornell University Cross Connection Control Program Manual, ANSI A-17.1, Safety Code for Elevators and Escalators, and referenced edition of the following National Fire Protection Association (NFPA) Standards:

1. NFPA 13: Standard for the Installation of Sprinkler Systems.

2. NFPA 25: Inspection, Testing and Maintenance of Water-Based Fire Protection Systems.

3. NFPA 72: National Fire Alarm Code.

4. NFPA 241: Standard for Safeguarding Construction, Alteration and Demolition Operations.

B. Follow all requirements, recommendations and appendices to comply with the latest edition of the following publications, codes, standards, and listings/approvals:

1. FM Global (FM) Approval Guide.

2. Underwriters Laboratories, Inc. (UL) Fire Protection Equipment Directory.

3. 2020 Fire Code of New York State.

4. OSHA Rules and Regulations.

5. Requirements of Insurance Underwriter and other Authorities Having Jurisdiction.

C. Equipment, devices, hangers and components shall be UL listed and FM approved and labeled for the intended fire protection service.

D. The fire protection work shall be performed by an experienced firm regularly engaged in the installation of fire protection sprinkler systems.

E. Preparation of working plans, calculations and site observation of systems shall be completed by a NICET Level III technician under the direction of a qualified New York State Registered Professional Engineer.

1.3 SYSTEM DESCRIPTION

A. The fire protection system shall be a wet pipe or pre-action automatic sprinkler system arranged to properly protect spaces as indicated.

B. Water is supplied from a 12 in. municipal water main located at Hydrant L-134, through an 8 in. underground water main to the system's main riser. Water supply data at the municipal main, (elevation of the hydraulic source node point at hydrant L-134 is 875.0 feet), indicates the following:

1. 42 psi static.

2. 30 psi residual with 1,350 gpm flowing.

C. The flow test information above is submitted for information only. This contractor shall arrange for a new flow test on the municipal main prior to performing hydraulic calculations. The more restrictive of these two tests shall be used as the basis of design.

D. Fire department connection(s) shall be provided to allow the servicing fire department to augment the system's normal automatic water supply.

E. The system shall be hydraulically calculated in accordance with all provisions of the Contract Documents and any Authority Having Jurisdiction.

F. Use of room design method will not be permitted. Calculations shall be based upon the specific hazard for the areas being protected. The following minimum requirements shall be provided as actually installed in the protected spaces.

1. Hazard Group HC-1: These areas shall include: Office Areas, Conference Rooms, Corridors, Classrooms.

a. Water density: .10 gpm/sq. ft.

b. Maximum coverage per sprinkler = 225 sq. ft.

c. Hydraulic remote area: 1,500sq. ft.

d. Interior hose demand: 0 gpm.

e. Exterior hose demand: 1

2. Hazard Group HC-2: These areas shall include High Bay, Mechanical Rooms, Utility Rooms.

   a. Water density: .20 gpm/sq. ft.

   b. Maximum coverage per sprinkler = 130 sq. ft.

   c. Hydraulic remote area: 3,500 sq. ft.

   d. Interior hose demand: 0 gpm.

   e. Exterior hose demand: 250 gpm.

3. Hazard Group HC-3: This area shall include UPS Room

   a. Water density: .30 gpm/sq. ft.

   b. Maximum coverage per sprinkler = 120 sq. ft.

   c. Hydraulic remote area: 3,500 sq. ft.

   d. Interior hose demand: 0 gpm.

   e. Exterior hose demand: 250 gpm.

G. Maximum coverage for any sprinkler head shall not exceed NFPA or FM Global requirements or the listing for the sprinklers provided, whichever is more restrictive.

H. A minimum 10 percent safety factor shall be provided between the available municipal water supply curve and the total system demand point. The total system demand point shall be at the municipal water main and include the calculated sprinkler and interior hose stream demands plus the exterior hose stream demand at the residual pressure required for proper system operation.

I. The maximum flow velocity shall not exceed 20 ft. per second in the piping system and 15 ft. per second in mains with paddle type waterflow indicators.

J. Water supply control valves shall be electrically supervised and mechanically locked for proper position. Waterflow and supervisory circuits shall be in accordance with the requirements of electrical specifications. Electric connections to sprinkler system shall be by Division 26. Furnish wiring diagrams for all equipment.

K. Provide 3/16 in. x 1 in. cadmium plated carbon steel chains and master keyed all brass case hardened padlocks to lock water supply valves in the proper position.

1.4 SUBMITTALS

A. Product Data:

1. Submit manufacturer's catalog cut, specifications and installation instructions for each item or component of fire protection system. Clearly indicate pertinent information such as, but not limited to:

a. Manufacturer's model number.

b. Materials, size, finish and type of connection.

c. Pressure ratings of components.

d. FM approval/UL listing.

B. Certification: Submit Contractor's NICET certification and number.

C. Samples:

1. If requested, submit sample of sprinklers.

D. Drawings and Calculations:

1. All drawings and calculations shall be signed and sealed by a New York State Registered Professional Engineer.

2. Submit complete NFPA 13/FM Global drawings and hydraulic calculations with cross reference to applicable drawings, water supply data, and equipment schedule with ratings for the system to the Ithaca Fire Department, Cornell Environmental Health and Safety, Cornell Fire Protection Engineer, and FM Global. Contractor shall not commence with construction until all parties listed above have given their approval.

3. Submit hydraulic calculations for each design density/remote area with items in NFPA 13/FM Global Data Sheets incorporated including sketches to indicate flow quantities, sprinklers operating and direction of flow for pipes in looped and gridded systems.

4. Drawing shall be fabrication drawings provided to indicate actual sprinkler, standpipe and equipment layouts. Drawings shall be 1/4" = 1'-0" scale on reproducible sheets of uniform size. Drawings shall show all data required by NFPA 13/FM Global Data Sheets.

5. Submit drawings in one (1) complete package.

E. Record Drawings and Documents:

1. Submit Record Drawings, hydraulic calculations, test reports, and NFPA Above and Below Ground Material and Test Certificates to the Owner's Representative, Insurance Underwriter and other Authorities Having Jurisdiction.

PART 2 - PRODUCTS

2.1 GENERAL

A. Mixing of manufacturers or models of the same or similar component will not be acceptable.

2.2 PRESSURE GAUGES

A. Water Pressure Gauge:

1. Anodized aluminum case, 3-1/2 in. diameter, glass lens, brass movement, 1/4 in. NPT male bottom connection with gauge cock.

2. 0 to 300 psi range, in 5 psi increments with accuracy to meet ANSI B40.1.

B. Air Pressure Gauge:

1. Anodized aluminum case, 3-1/2 in. diameter, glass lens, brass movement, 1/4 in. NPT male bottom connection with gauge cock.

2. 0 to 80 psi range, in 1 psi increments with accuracy to meet ANSI B40.1.

C. Acceptable Manufactures: Reliable; FM approval shall be stamped on all pressure gauges.

2.3 SPRINKLERS AND ACCESSORIES

A. Brass or bronze, 1/2 in. orifice, 1/2 in. NPT. 155°F ordinary temperature classification for light and ordinary hazards. Use 286°F sprinklers in Mechanical, Electrical and Elevator Rooms; in vicinity of heat equipment/sources; and in accordance with NFPA 13.

1. Finished Ceiling Areas: Semi-recessed pendent sprinklers with matching two-piece escutcheon, color as selected by Architect of Record.

2. Unfinished Ceiling Areas: Natural brass/bronze finish pendent or upright sprinklers as required.

B. Sprinkler Types and Design Equipment:

1. Quick Response Pendent and Upright: Viking Microfast® Quick Response Pendent and Upright.

2. Quick Response Horizontal Sidewall: Viking Microfast® Quick Response.

3. Quick Response Extended Coverage Horizontal Sidewall: Viking Microfast® EC/QREC Horizontal Sidewall Sprinkler.

4. Sprinkler K-Factor shall be in accordance with FM Global Data Sheet No. 2-0.

C. Acceptable Manufacturers: Reliable, Victaulic, Viking.

D. Flexible Sprinkler Drops:

1. FM Approved braided Type 304 stainless steel tube with union joints, factory tested to 400 psi and listed for up to three (3) 90° bends including bracket for mounting to ceiling or building structure.

2. Design Equipment: Victaulic "VicFlex".

E. Sprinkler Guards:

1. Steel wire cage with base plate and retaining clamps. Same manufacturer as sprinkler.

2. Design Equipment: Viking Model D-1.

F. Sprinkler Cabinets and Spare Sprinklers:

1. Steel or aluminum construction with shelves and shell holes to accommodate the number of spare sprinklers required by NFPA 13.

2. Bright red finish with hinged front door and label.

3. Sprinkler wrenches compatible for each type used.

4. Spare sprinklers for each system of the type and proportion of those used in each system.

5. Design Equipment: Viking Model FPPI.

G. Acceptable Manufacturers: Viking, Reliable, Victaulic.

2.4 ALARM EQUIPMENT

A. Waterflow Pressure Switch:

1. Pressure activated waterflow alarm switch with retard, steel enclosure and cover, adjustable differential type, SPDT contacts, 24 volt DC, 1/2 in. pressure connection, 250 psi rated.

2. Design Equipment: Potter Electric #WFSR-F.

B. Air Pressure Supervisory Switch:

1. For remote low air pressure supervisory alarm and for air compressor operation, steel enclosure and cover, adjustable differential type, SPDT contacts, 24 volt DC, 1/2 in. pressure connection compatible with system devices, 250 psi rated.

2. Design Equipment: Potter Electric #PS40A.

C. Paddle Waterflow Detectors:

1. Adjustable retard feature, SPDT contacts, 24 volt DC, 250 psi rated.

2. Design Equipment: Potter Electric #VSR-AT.

D. Tamper Switches:

1. Integral with valve or separate device installed on valve to actuate alarm upon valve movement, steel enclosure, SPDT contacts, 24 volt DC, mounting brackets and hardware.

2. Design Equipment: Potter Electric #OSYSU (for OS&Y valves) and #PIVSU-A (for post indicator and butterfly valves).

E. Room Temperature Switch:

1. Surface mounted epoxy sealed with bi-metallic operating mechanism, hermetically sealed precious metal contacts normally open (NO) or normally closed (NC), 24 volt DC, which automatically reset for repetitive operation, eliminating the need for sensing element replacement.

2. The normally open detector, RTS-O, will close the contact when the temperature drops below 40°F (4,5°C). The normally closed detector, RTS-C, will open the contact when the temperature drops below 40°F (4,5°C). The detector shall automatically reset to the normal state when the temperature rises above 40°F (4,5°C).

3. Room Temperature Switch shall comply with NFPA 13 and NFPA 72.

F. Acceptable Manufacturers: Autocall, Potter Electric, System Sensor.

2.5 INSPECTOR'S TEST EQUIPMENT

A. Test and Drain Valve with pressure relief:

1. Combined test and drain valves, sight glass and interchangeable restricting orifice, sized for smallest orifice in sprinkler zone with pressure relief.

2. Design Equipment: AGF Manufacturing "Test and Drain".

3. Acceptable Manufacturers: AGF Manufacturing, Viking, Victaulic.

2.6 AUTOMATIC AIR VENTS

A. Automatic air vent with drip pan shall include 1/2 in. NPT isolation valve with forged brass body and stainless steel 20 mesh strainer, adjustable purge valve with hose connection, threaded cap and lanyard and automatic air release valve with conical body, recessed venting valve, single float on rigid shaft and bubble breaker. Drain piping shall be indirectly connected to the nearest sanitary floor drain.

1. Design Equipment: Potter PAAR-B.

2. Acceptable Manufacturers: Potter or approved equal.

2.7 SYSTEM COMPONENT IDENTIFICATION

A. At control, test and drain valves, provide permanently marked identification signs constructed of 18 gauge steel with baked enameled finish. The signs shall be permanently mounted on the piping or wall at the valve, or on the valve, but shall not be hung on the valve with wires or chains which permits easy removal of the sign. The sign shall clearly indicate the valve's purpose and what portion of the structure it serves. Additional signs, shall be provided at each alarm check and dry pipe valve to clearly indicate hydraulic calculation data.

2.8 ADDITIONAL SPRINKLERS AND SPRINKLER GUARDS

A. Include allowance for providing 12 additional sprinklers with related piping, fittings, hangers and 12 additional sprinkler guards installed at locations where job conditions or equipment selections may be required. Provide a credit for sprinklers and guards not installed.

PART 3 - EXECUTION

3.1 INSTALLATION

A. The nature of the work requires coordination with other trades. Shop fabrication shall be done at the Contractor's risk. Relocation of piping and components to avoid obstructions may be necessary. Relocation, if required, shall be done at the Contractor's expense. The installation shall be performed in a workmanlike manner as determined by the Owner's Representative and in accordance with the Contract Documents, manufacturer's printed installation instructions, and submitted and Owner's Representative reviewed drawings.

B. Piping shall not pass directly over electric panelboards, switchboards, motor control centers, and similar electric and telephone equipment. However, protection for these spaces shall be provided.

C. Piping shall be installed concealed above finish ceiling area with sprinklers located in the quarter points of ceiling tiles where ceiling tiles are used.

D. Provide a control valve and readily removable flushing connection consisting of a cap at each end of cross mains and branchline piping.

E. Each sprinkler system shall be provided with an automatic vent valve located near the high point of the system in accordance with NFPA requirements.

F. Provide sprinkler guards for sprinklers in mechanical and storage spaces, less than 8 ft. above finished floor subject to mechanical damage.

G. Pipe ball drip valves at a floor drain or to the exterior. Pipe 2 in. main drains and water motor gong drains to discharge to the exterior at approximately 2 ft. above finished grade.

H. Securely install the spare sprinkler cabinets to the building wall at the main riser.

I. Inspector's test valves system auxiliary drains shall be installed 7 ft. or less above the finished floor.

J. Upright sprinklers directly on branch lines shall be installed with their frame parallel to the piping.

K. Provide sprinkler protection under ductwork, groups of ductwork and other obstructions to water spray and distribution. Use intermediate level sprinklers if subject to waterspray from above.

L. Exposed pipe shall be left clean for painting.

M. Coordinate and activate the systems or portions of the system to operational status as soon as possible.

3.2 PIPING, VALVES AND HANGERS

A. Refer to other applicable sections.

B. All piping shall be installed to permit drainage of the system through a main drain valve. Where a change in piping direction prevents drainage of the system, auxiliary drains shall be provided. The auxiliary drain assembly shall consist of a lockable ball valve, nipple and cap or plug and shall be located 7 ft. or less above the finished floor. Pipe drain to an accessible location.

3.3 TESTS

A. General:

1. Pipe installation shall be inspected by Owner's Representative prior to being covered by building construction or backfill.

2. Give the Owner's Representative advance notice of final tests. Perform tests in a safe manner. Provide written certification that tests have been successfully completed. Use NFPA Above and Below Ground Material and Test Certificate Forms.

3. Correct system leaks prior to final test. Do not utilize water additives, caulking, etc. to correct leaks. Provide appliances, equipment, instruments, devices and personnel.

4. Flushing: Follow Contract Documents and utilize open end pipe sections if possible.

B. Pressure Tests:

1. Hydrostatic Tests: Minimum 200 psi and in accordance with NFPA 13 for two (2) hours.

2. Air Test: Minimum 40 psi for 24 hours with loss not to exceed 1.5 psi within 24 hour duration.

3. Do not subject existing systems to excess pressures.

C. Alarm Tests:

1. Demonstrate activation of alarms and operational trip test and water delivery time for pre-action systems by use of Inspector's test valve.

3.4 SYSTEM TURNOVER

A. Prior to final acceptance, instruct the Owner's Representative in the proper operation, maintenance, testing, inspection and emergency procedures for all systems furnished, for a period of time as needed. Provide one (1) new original pamphlet of NFPA 25. Indicate in writing to the Owner's Representative the provisions for proper maintenance, testing, and inspection of the systems as required by local fire codes.

END OF SECTION 21 13 00

SECTION 22 05 00 - BASIC PLUMBING REQUIREMENTS

PART 1 - GENERAL

1.1 ROUGHING

A. The Contract Drawings have been prepared in order to convey design intent and are diagrammatic only. Drawings shall not be interpreted to be fully coordinated for construction.

B. Due to small scale of Drawings, it is not possible to indicate all offsets, fittings, changes in elevation, interferences, etc. Make necessary changes in contract work, equipment locations, etc., as part of a contract to accommodate work to avoid obstacles and interferences encountered. Before installing, verify exact location and elevations at work site. **DO NOT SCALE** plans. If field conditions, details, changes in equipment or shop drawing information require an important rearrangement, report same to Owner's Representative for review. Obtain written approval for all major changes before installing.

C. Install work so that items both existing and new are operable and serviceable. Eliminate interference with removal of coils, motors, filters, belt guards and/or operation of doors. Provide easy, safe, and code mandated clearances at controllers, motor starters, valve access, and other equipment requiring maintenance and operation. Provide new materials, including new piping and insulation for relocated work.

D. Coordinate work with other trades and determine exact route or location of each duct, pipe, conduit, etc., before fabrication and installation. Coordinate with Architectural Drawings. Obtain from Owner's Representative exact location of all equipment in finished areas, such as thermostat, fixture, and switch mounting heights, and equipment mounting heights. Coordinate all work with the architectural reflected ceiling plans and/or existing Architecture. Mechanical and electrical drawings show design arrangement only for diffusers, grilles, registers, air terminals, lighting fixtures, sprinklers, speakers, and other items. Do not rough-in contract work without reflected ceiling location plans.

E. Before roughing for equipment furnished by Owner or in other Divisions, obtain from Owner and other Divisions, approved roughing drawings giving exact location for each piece of equipment. Do not "rough in" services without final layout drawings approved for construction. Cooperate with other trades to insure proper location and size of connections to insure proper functioning of all systems and equipment. For equipment and connections provided in this contract, prepare roughing drawing as follows:

1. Existing Equipment: Measure the existing equipment and prepare for installation in new location.

2. New Equipment: Obtain equipment roughing drawings and dimensions, then prepare roughing-in-drawings. If such information is not available in time, obtain an acknowledgement in writing, then make space arrangements as required with Owner's Representative.

1.2 EQUIPMENT AND MATERIAL REQUIREMENTS

A. Provide materials that meet the following minimum requirements:

1. Materials shall have a flame spread rating of 25 or less and a smoke developed rating of 50 or less, in accordance with NFPA 255.

2. All equipment and material for which there is a listing service shall bear a UL label.

3. Potable water systems and equipment shall be built according to AWWA Standards.

4. Gas-fired equipment and system shall meet AGA Regulations and shall have AGA label.

5. All electrical equipment and systems, as a whole, shall be tested and listed by an OSHA approved Nationally Recognized Testing Laboratory (NRTL) for the intended use in accordance with the applicable standards and have a physical label indicating such.

1.3 CONCEALMENT

A. **Conceal all contract work** above ceilings and in walls, below slabs, and elsewhere throughout building. If concealment is impossible or impractical, notify Owner's Representative before starting that part of the work and install only after their review. In areas with no ceilings, install only after Owner's Representative reviews and comments on arrangement and appearance.

1.4 CHASES

A. New Construction:

1. Certain chases, recesses, openings, shafts, and wall pockets will be provided as part of General Construction Trade. Mechanical and Electrical trades shall provide all other openings required for their contract work.

2. Check Architectural and Structural Design and Shop Drawings to verify correct size and location for all openings, recesses and chases in general building construction work.

3. Assume responsibility for correct and final location and size of such openings.

4. Rectify improperly sized, improperly located or omitted chases or openings due to faulty or late information or failure to check final location.

5. Provide 18 gauge galvanized sleeves and inserts. Extend all sleeves 2 in. above finished floor. Set sleeves and inserts in place ahead of new construction, securely fastened during concrete pouring. Correct, by drilling, omitted or improperly located sleeves. Assume responsibility for all work and equipment damaged during course of drilling. Firestop all unused sleeves.

6. Provide angle iron frame where openings are required for contract work, unless provided by General Construction trade.

B. In Existing Buildings:

1. Drill holes for floor and/or roof slab openings.

2. Multiple pipes smaller than 1 in. properly spaced and supported may pass through one 6 in. or smaller diameter opening.

3. Seal voids in fire rated assemblies with a fire-stopping seal system to maintain the fire resistance of the assembly. Provide 18 gauge galvanized sleeves at fire rated assemblies. Extend sleeves 2 in. above floors.

4. In wall openings, drill or cut holes to suit. Provide 18 gauge galvanized sleeves at shafts and fire rated assemblies. Provide fire-stopping seal between sleeves and wall in drywall construction. Provide fire stopping similar to that for floor openings.

1.5 PENETRATION FIRESTOPPING

A. Fire-Stopping for Openings Through Fire and Smoke Rated Wall and Floor Assemblies:

1. Provide materials and products listed or classified by an approved independent testing laboratory for "Penetration Fire-Stop Systems". The system shall meet the requirements of "Fire Tests of Penetrations Fire-Stops" designated ASTM E814.

2. Provide fire-stop system seals at all locations where piping, tubing, conduit, electrical busways/cables/wires, ductwork and similar utilities pass through or penetrate fire rated wall or floor assembly. Provide fire-stop seal between sleeve and wall for drywall construction.

3. The minimum required fire resistance ratings of the wall or floor assembly shall be maintained by the fire-stop system. The installation shall provide an air and watertight seal.

4. The methods used shall incorporate qualities which permit the easy removal or addition of electrical conduits or cables without drilling or use of special tools. The product shall adhere to itself to allow repairs to be made with the same material and permit the vibration, expansion, and/or contraction of any items passing through the penetration without cracking, crumbling and resulting reduction in fire rating.

5. Plastic pipe/conduit materials shall be installed utilizing intumescent collars.

6. Provide a submittal including products intended for use, manufacturer's installation instructions, and the UL details for all applicable types of wall and floor penetrations.

7. Fire-stopping products shall not be used for sealing of penetrations of non-rated walls or floors.

B. Acceptable Manufacturers:

1. Dow Corning Fire-Stop System Foams and Sealants.

2. Nelson Electric Fire-Stop System Putty, CLK and WRP.

3. S-100 FS500/600, Thomas & Betts.

4. Carborundum Fyre Putty.

5. 3-M Fire Products.

6. Hilti Corporation.

1.6 ACCESS PANELS

A. Provide access panels for required access to respective trade's work. Location and size shall be the responsibility of each trade. Access panels provided for equipment shall provide an opening not smaller than 22 in. by 22 in. Panels shall be capable of opening a minimum of 90 degrees. Bear cost of construction changes necessary due to improper information or failure to provide proper information in ample time. Access panels over 324 square inches shall have two cam locks. Provide proper frame and door type for various wall or ceiling finishes. Access panels shall be equal to "Milcor" as manufactured by Inland Steel Products Co., Milwaukee, Wisconsin. Provide General Construction trade with a set of architectural plans with size and locations of access panels.

1.7 CONCRETE BASES

A. Provide concrete bases for all floor mounted equipment. Provide 3,000 lb. concrete, chamfer edges, trowel finish, and securely bond to floor by roughening slab and coating with cement grout. Bases 4 in. high (unless otherwise indicated); shape and size to accommodate equipment. Provide anchor bolts in equipment bases for all equipment provided for the project, whether mounted on new concrete bases or existing concrete bases.

1.8 HVAC EQUIPMENT CONNECTIONS

A. Contractor is responsible for draining, filling, venting, chemically treating and restarting any systems which are affected by work shown on the Contract Documents unless specifically noted otherwise.

B. Provide final connections to all equipment as required by the equipment. Provide final connections, including domestic water piping, wiring, controls, and devices from equipment to outlets left by other trades. Provide equipment waste, drip, overflow and drain connections extended to floor drains.

C. Provide for Owner furnished and Contractor furnished equipment all valves, piping, piping accessories, traps, pressure reducing valves, gauges, relief valves, vents, drains, insulation, sheet metal work, controls, dampers, as required.

D. Refer to manufacturer drawings and specifications for requirements of laboratory equipment and special equipment. Verify connection requirements before bidding.

1.9 PLUMBING EQUIPMENT CONNECTIONS

A. Contractor is responsible for draining, filling, venting, chemically treating and restarting any systems which are affected by work shown on the Contract Documents unless specifically noted otherwise.

B. Provide roughing and final connections to all equipment. Provide loose key stops, sanitary "P" traps, tailpiece, adapters, gas or air cocks, and all necessary piping and fittings from roughing point to equipment. Provide installation of sinks, faucets, traps, tailpiece furnished by others. Provide cold water line with gate valve and backflow prevention device at locations called for. Provide continuation of piping and connection to equipment that is furnished by others. Provide relief valve discharge piping from equipment relief valves.

C. Provide valved water outlet adjacent to equipment requiring same. Provide equipment type floor drains, or drain hubs, adjacent to equipment.

D. Install controls and devices furnished by others.

E. Refer to Contract Documents for roughing schedules, and equipment and lists indicating scope of connections required.

F. Provide for Owner furnished and Contractor furnished equipment all valves, piping, piping accessories, traps, pressure reducing valves, gauges, relief valves, vents, drains, as required.

G. Refer to Manufacturer drawings and specifications for requirements of laboratory equipment and special equipment. Verify connection requirements before bidding.

1.10 ELECTRICAL EQUIPMENT CONNECTIONS

A. Provide complete power connections to all electrical equipment. Provide control connections to equipment. Heavy duty NEC rated disconnect ahead of each piece of equipment. Ground all equipment in accordance with NEC.

B. Provide for Owner furnished and Contractor furnished equipment all power wiring, electric equipment, control wiring, switches, lights, receptacles, and connections as required.

C. Refer to Manufacturer's drawings/specifications for requirements of laboratory equipment and special equipment. Verify connection requirements before bidding.

END OF SECTION 22 05 00

SECTION 22 05 23 - VALVES

PART 1 - GENERAL

1.1 WORK INCLUDED

A. Provide labor, materials, equipment and services to perform operations required for the complete installation and related Work as required in Contract Document.

1.2 SUBMITTALS

A. Submit manufacturer's data in accordance with Basic Mechanical and Electrical Requirements. Obtain approval prior to ordering material.

B. Provide submittals for all items specified under Part 2 of this section.

PART 2 - PRODUCTS

2.1 VALVES - GENERAL

A. Valves shall have following requirements:

1. Working pressure stamped or cast on bodies.

2. Stem packing serviceable without removing valve from line.

3. All items here-in used to convey water for potable use shall be lead free in accordance with NSF Standard, Standard 61, Section 9 - Standard for Drinking Water and Lavatory Faucets and NSF Standard 372 - Maximum Lead Requirements. Compliance shall be via third party testing and certification.

B. Acceptable Manufacturers:

1. Ball Valves: Apollo, Milwaukee, Nibco, Watts.

2. To establish a standard of quality and identify features, certain manufacturer's numbers are given in the following paragraphs.

2.2 VALVES

A. Ball Valves (Compressed Air):

1. For all water services, ball valves shall be:

a. Body Bronze

b. Body Style Standard Port, 2 piece

c. Trim 316 Stainless Steel Ball and Stem, with stem extension to raise handle out of insulation

d. Seat Reinforced Teflon (RTFE), 15% glass filled double seal

e. Seat Working P/T Rating 300 psig @ 250°F Minimum

f. Body Working P/T Rating 300 psig @ 300°F Minimum

g. WOG Rating 300 psig Minimum

h. Lead free

i. Design Basis 70LF-140 Apollo, Nibco T-580-66LF, S-580-66-LF, Watts LFB6000-SS, LFB6001-SS.

B. Ball Valves (Clean Air):

1. Swagelok Medium Pressure

PART 3 - EXECUTION

3.1 INSTALLATION

A. Locate valves for easy access and provide separate support where necessary. Install valves with stems at or above the horizontal position. Install swing check valves in horizontal position with hinge pin level.

B. Provide drain valves with hose thread connections on all equipment. Provide hose thread drain valves at all low points to enable complete drainage of all piping systems including, water mains, branches, at base of vertical risers and at strainers.

C. Inspect valves for proper operation before installation.

END OF SECTION 22 05 23

SECTION 22 05 53 - PLUMBING IDENTIFICATION

PART 1 - GENERAL

1.1 WORK INCLUDED

A. Provide labor, materials, equipment and services as required for the complete installation designed in Contract Documents.

1.2 QUALIFICATIONS

A. All identification devices shall comply with ANSI A13.1 for lettering size, length of color field, colors, and viewing angles.

1.3 SUBMITTALS

A. Submit manufacturer's technical product data and installation instructions for each identification material and device. Submit valve schedule for each piping system typewritten on an 8-1/2 in. x 11 in. paper (minimum), indicating valve number, location and valve function. Submit schedule of pipe, equipment and name identification for review before stenciling or labeling.

1.4 MAKES

A. Allen Systems, Inc., Brady (W.H.) Co.; Signmark Div., Industrial Safety Supply Co., Inc., Seton Name Plate Corp.

PART 2 - PRODUCTS

2.1 GENERAL

A. Provide manufacturer's standard products of categories and types required for each application. In cases where there is more than one type specified for an application, selection is installer's option, but provide single selection for each product category.

B. All adhesives used for labels in the interior of the building shall comply with the maximum Volatile Organic Compound (VOC) limits as called for in the current version of U.S. Green Building Council LEED Credits EQ 4.1 and EQ 4.2.

C. For work within an existing building, the mechanical identification shall meet the intent of this section, but match the Owner's existing identification symbology.

2.2 PIPING IDENTIFICATION

A. Identification Types:

1. Pressure Sensitive Type: Provide manufacturer's standard pre-printed, permanent adhesive, color coded, pressure sensitive vinyl pipe markers complying with ANSI A13.1. Provide a 360° wrap of flow arrow tape at each end of pipe label.

2. Snap-On Type: Provide manufacturer's standard pre-printed, semi rigid snap-on, color coded pipe markers, complying with ANSI-A13.1.

B. Lettering:

1. Piping labeling shall conform to the following list:

PIPE FUNCTION	IDENTIFICATION
Cold Water	DOMESTIC COLD WATER
Hot Water	DOMESTIC HOT WATER
Hot Water Recirculating	DOMESTIC HOT WATER RECIRCULATING
140 Degree Hot Water	DOMESTIC HOT WATER - 140°F
140 Degree Hot Water Recirculating	DOMESTIC HOT WATER RECIRCULATING - 140°F
Sanitary Waste	SANITARY WASTE
Indirect Waste	INDIRECT WASTE
Storm	STORM
Vent	VENT
Pump Discharge	PUMP DISCHARGE
Natural Gas	NATURAL GAS
Compressed Air	COMPRESSED AIR
Lab Vent	LAB VENT
Lab Waste	LAB WASTE
Soft Water	SOFT WATER
Deionized Water	DEIONIZED WATER
Non-Potable Water	NON-POTABLE WATER

2.3 VALVE IDENTIFICATION

A. Valve Tags:

1. Standard brass valve tags, 2 in. diameter with 1/2 in. high black-filled numerals. Attach to valve with brass jack chain and "S" hook. Identify between heating and plumbing services with 1/4 in. letters above the valve number.

2. Acceptable Manufacturers: Seton Style No. M4507, or approved equal.

B. Valve Chart:

1. Provide valve chart for all valves provided as a part of this project. Frame and place under clear glass. Mount in Mechanical Room.

2.4 EQUIPMENT IDENTIFICATION

A. General:

1. Provide engraved vinyl nameplates for each major piece of mechanical equipment provided, 2-1/2 in. x 3/4 in. size.

2. Acceptable Manufacturers: Seton Style No. M4562, or approved equal.

2.5 ABOVE CEILING EQUIPMENT LOCATOR

A. 3/4 in. diameter adhesive stickers placed on ceiling grid and color-coded.

B. The color for all plumbing valves shall be BLUE.

PART 3 - EXECUTION

3.1 GENERAL

A. Provide valve tags for all valves provided on project.

B. Provide equipment tags for all equipment provided on project.

C. Provide piping identification with directional flow arrows for all piping on project, maximum intervals of 20'-0". For piping installed through rooms, provide at least one (1) pipe label in each room, for each pipe function.

END OF SECTION 22 05 53

This page intentionally left blank.

SECTION 22 10 10 – PIPING SYSTEMS AND ACCESSORIES

PART 1 - GENERAL

1.1 WORK INCLUDED

A. Provide labor, materials, equipment and services to perform operations required for the complete installation and related Work as required in Contract Documents.

1.2 SUBMITTALS

A. Provide a schedule of pipe materials, fittings and connections.

B. Provide a detailed matrix listing the specific UL approved firestop system assembly to be used for each type of piping provided and each type of construction to be penetrated along with all associated UL assembly details.

C. Anchors and Guides:

1. Provide detailed fabrication drawings for all field-fabricated anchors and guides and intermediate structural elements.

2. Provide submittals for pre-manufactured anchors and guides.

3. Submittals shall include comprehensive structural engineering design and analysis by a qualified professional engineer, licensed to practice in the State in which the project is located using the performance and design criteria specific to this project for support and attachment of anchors and guides to building structure.

PART 2 - PRODUCTS

2.1 GENERAL

A. Pipe and fittings shall be new, marked with manufacturer's name and comply with applicable ASTM and ANSI Standards.

B. All items here-in used to convey water for potable use shall be lead free in accordance with NSF, Standard 61, Section 9 - Standard for Drinking Water and Lavatory Faucets and NSF Standard 372 - Maximum Lead Requirements. Compliance shall be via third party testing and certification.

2.2 COPPER TUBE AND FITTINGS

A. Pipe: ASTM B88; Type K or L or M hard temper. Soft temper only as called for. Plans show copper tube sizes.

B. Fittings: Wrought copper and copper alloy, ASME B16.22 or cast copper alloy, ASME B16.18; solder end connections.

C. Joints: Comply with the requirements of ASTM B828.

D. Unions and Flanges: 2 in. and smaller use unions, solder type, cast bronze, ground joint, 150 lb. swp: 2-1/2 in. and over use flanges, cast bronze, companion type, ASME drilled, solder connection, 150 lb. swp.

E. Flux Materials: Flux shall comply with ASTM B813 and the provisions of the New York State Plumbing Code.

F. Solder Materials: No-lead solder, using alloys made from tin, copper, silver and nickel. Harris, Inc., "Stay-Safe 50" and "Bright", Engelhard "Silvabright 100", Canfield "Watersafe" or approved equal.

G. Brazing Materials: Class BcuP-5 for brazing copper to brass, bronze to copper. Harris, Inc. "Stay-Silv 15" or approved equal.

2.3 STAINLESS STEEL PIPE AND FITTINGS

A. Tubing: 316L, stainless steel tubing, meets ASTM A269 requirements for stainless steel tubing, bright annealed in a dry hydrogen atmosphere, 0.065 in. wall thickness, 25 Ra interior surface roughness, purged with UHP nitrogen, ends capped and tubes bagged at factory.

B. Fittings: Shall be same material as piping. Passivated and cleaned to match pipe.

C. Design Equipment: Swagelok Medium Pressure.

2.4 DIELECTRIC PIPE FITTINGS

A. Description: Assembly or fitting having insulating material isolating joined dissimilar metals to prevent galvanic action and stop corrosion.

B. Flanges: Factory-fabricated, companion-flange assembly, for 150 or 300 psig minimum pressure to suit system fluid pressures and temperatures with flange insulation kits and bolt sleeves.

C. Acceptable Manufacturers: EPCO, Capitol Manufacturing, Watts or approved equal.

2.5 HANGERS, INSERTS AND SUPPORTS

A. Hangers, Inserts, Clamps: B-Line, Grinnell, Michigan Hanger, PHD Manufacturing.

B. Hangers:

1. Adjustable, wrought malleable iron or steel with electroplated zinc or cadmium finish. PVC coated where in contact with copper piping.

2. Adjustable ring type where piping is installed directly on hanger for piping 3 in. and smaller.

3. Adjustable steel clevis type for piping 4 in. and larger.

4. Nuts, washers and rods with electroplated zinc or cadmium finish.

5. Provide hot dipped galvanized finish for hangers and accessories installed in exterior locations and interior areas with moist environment conditions such as pools, pool filter rooms, areaways, garages and similar areas.

C. Spacing Schedule:

Pipe Size	Steel	Copper	Plastic	Cast Iron	Rod Size
3/4 in. to 1 in.	8 ft.	6 ft.	3 ft.	Each	3/8 in.
1-1/4 in. to 2 in.	10 ft.	6 ft.	3 ft.	Horizontal	3/8 in.
2-1/2 in. to 4 in.	12 ft.	10 ft.	4 ft.	Joint 5 ft.	1/2 in.
5 in. and over	12 ft.	10 ft.	4 ft.	Maximum	5/8 in.
8 in.	12 ft.	10 ft.	4 ft.	O.C.	3/4 in.
Over 8 in.	To suit loading conditions.				

D. Beam Attachments:

1. C-Clamp style, locknut, restraining strap, electroplated finish, UL listed, FM approved for pipe sizes 2 in. and smaller.

2. Center loaded style with clamp attachments that engage both edges of beam, electroplated finish, UL listed, FM approved, for pipe sizes larger than 2 in., refer to "Supports" for additional requirements.

E. Inserts: Carbon steel body and square insert nut, galvanized finish, maximum loading 1300 lbs., for 3/8 in. to 3/4 in. rod sizes, reinforcing rods on both sides, MSS-SP-69 Type 19 or approved equal.

F. Supports:

1. Provide intermediate structural steel members where required for hanger attachment. Members shall span across the bar joists at panel points of joists. Secure member to structure. Select size of members based on a minimum factor of safety of four.

2. For Weights Under 1000 lbs.: "Drill-In" inserts, "U" shaped Channel, beam clamps or other structurally reviewed support. The factor of safety shall be at least four. Follow manufacturer's recommendations.

3. For Metal Decks: Drill hole through for hanger rods and imbed a welded plate in concrete or use devices designed for this application, with a safety factor of four.

4. Acceptable Manufacturers: Hilti, ITW Ramset, Phillips "Red Head" or approved equal.

G. Trapeze Hangers:

1. For plumbing systems only.

2. Hangers shall be supported with rod sized with a safety factor of four.

3. May be manufactured type "U" shaped channel, or suitable angle iron or channel. Round off all sharp edges.

4. Securely fasten piping to trapeze with "U" bolt or pipe clamps, dissimilar metals shall not touch, use isolation gaskets, similar to HoldRite strut-mounted cushion clamps. Fasten piping to trapeze at every third support, except uninsulated piping which shall be fastened at every support using strut-mounted cushion clamps.

5. Acceptable Manufacturers: B-Line, HoldRite, Kindorf, Unistrut or approved equal.

H. Piping systems with material not listed above shall be supported and protected in accordance with manufacturer's recommendations.

2.6 PIPING ACCESSORIES

A. Escutcheon Plates: Steel or cast brass, split hinge type with setscrew, high plates where required for extended sleeves. Chrome plated in finished areas and at plumbing fixtures.

B. All cleanout plugs, bushings and nipples, required for instruments and gauges shall be brass.

C. Anchors:

1. Pipe support; same material as pipe; as manufactured by Pipe Shields Model C1000 or C2000, Keflex, Metraflex, Flexonics or Advanced Thermal Systems.

2. Pipe Anchors: a. Anchors shall be designed and located as to prevent stress to piping or building structural components from exceeding those permitted by ASME B31.9 and to prevent transfer of loading and stressing to connected equipment.

3. All field or shop fabricated anchor and equipment and piping supports shall include detail fabrication drawings submittals accompanied by comprehensive structural engineering design and analysis by a qualified, profession engineer licensed to practice in the State of New York, using the performance and design criteria specific to the project and system in question.

2.7 SLEEVES

A. Standard Type:

1. Schedule 40 black steel pipe sleeves for structural surfaces, two pipe sizes larger than the pipe, and as recommended by the sealing element manufacturer. Provide full circle water stop collar for sleeves located within below grade walls, wet wells and waterproofed surfaces. The collar shall be fabricated from steel plate and welded to the sleeve around its entire circumference.

2.8 FIRESTOP SYSTEM FOR OPENINGS THROUGH FIRE RATED WALL AND FLOOR ASSEMBLIES

A. Materials for firestopping seals shall be listed by an approved independent testing laboratory for "Through-Penetration Firestop Systems". The system shall meet the standard fire test for Through-Penetration Firestop Systems designated ASTM E814. Firestop system seals shall be provided at locations where piping pass through fire rated wall, floor/ceiling, or ceiling/roof assembly. Minimum required fire resistant ratings of the assembly shall be maintained by the Firestop System. Installation shall conform with the manufacturer's recommendations and other requirements necessary to meet the testing laboratory's listing for the specific installation.

2.9 STACK SLEEVE

A. Cast iron body with caulking recess, flashing clamp and under deck clamp.

B. Acceptable Manufacturers: Jay R. Smith Series 1720, Zurn, Wade.

2.10 PIPING MATERIALS AND SCHEDULE

A. See Exhibit "A", "Schedule of Piping Materials" at end of this Section for (Plumbing) piping.

B. See Exhibit "B", "Testing" at end of this Section.

PART 3 - EXECUTION

3.1 EQUIPMENT AND SYSTEMS

A. Install equipment and systems in accordance with provisions of each applicable Section of these Specifications, and Local/State Codes/Regulations having jurisdiction. Accurately establish grade and elevation of piping before setting sleeves. Install piping without springing or forcing, except where specifically called for, making proper allowance for expansion and anchoring. Changes in sizes shall be made with reducing fittings. Reducing couplings are not acceptable. Arrange piping at equipment with necessary offsets, unions, flanges, and valves, to allow for easy part removal and maintenance. Offset piping and change elevation as required to coordinate with other work. Avoid contact with other mechanical or electrical systems.

Provide adequate means of draining and venting units, risers, circuits and systems. Conceal piping unless otherwise called for. Copper tubing shall be cut with a wheeled tubing cutter or other approved copper tubing cutter tool. The tubing must be cut square to permit proper joining with the fittings. Ream pipes after cutting and clean before installing. Cap or plug equipment and pipe openings during construction. Install piping parallel with lines of building, properly spaced to provide clearance for insulation. Make changes in direction and branch connections with fittings. Do not install valves, unions and flanges in inaccessible locations. Materials within a system and between systems shall be consistent. If this is not possible, install dielectric fittings.

3.2 PIPING OVER ELECTRICAL EQUIPMENT

A. Contractor shall route piping to avoid installation directly over electric equipment, including, but not limited to panels, transformers, disconnects, starters, motor control center, adjustable speed drives and fused switches.

B. Piping shall not be installed in the dedicated electric and working space as defined by NEC 110. Dedicated electrical space is generally equal to the depth and width of electrical equipment, and extends 6 ft. above the electrical equipment, or to a structural ceiling. Dedicated working space is a minimum of 30 in. wide or the width of equipment (whichever is larger) a minimum of 6 ft.-6 in. tall, with a depth of 3ft. to 9 ft. depending on the voltage.

3.3 HANGERS, INSERTS AND SUPPORTS

A. Piping shall not be supported by wires, band iron, chains, from other piping, or by vertical expansion bolts. Support piping with individual hangers from concrete inserts, wood construction, welded supports, or beams clamps of proper configuration and loading design requirements for each location; replace if not suitable. Follow manufacturer's safe loading recommendations. Suspend with rods of sufficient length for swing and of size called for, using four (4) nuts per rod. Provide additional structural steel members, having one coat rustproof paint, where required for proper support. Provide oversized hangers where insulation/supports must pass between pipe and hanger. Provide continuous support or extra supports for plastic piping per manufacturer's requirements. Hangers, when attached to joists, shall only be placed at the top or bottom chord panel point. Only concentric type hangers are permissible on piping larger that 2-1/2 in.; "C" types are permitted for piping 2 in. and smaller on joists.

Provide riser clamps for each riser at each floor. Use trapeze hangers where a group of piping can be installed.

B. Provide a pipe hanger within 12 inches of pipe unions and piping connections to equipment, in order to facilitate disconnections of piping without pipe sagging.

3.4 PIPE CONNECTIONS

A. No-Lead Solder Connections: Nonacid flux and clean off excess flux and solder.

B. Brazed Connections: Make joints with silver brazing alloy in accordance with manufacturer's instructions. Remove working parts of valves before applying heat.

C. Threaded Connections: Clean out tapering threads, made up with pipe dope; screwed until tight connection. Pipe dope must be specifically selected for each application.

D. Flanged Joints: Select appropriate gasket material, size, type and thickness for service applications. Install gasket concentrically positioned. Use suitable lubricants on bolt threads.

E. Dielectric Pipe Fittings: Provide dielectric nipples at ALL equipment connections where dissimilar metals meet. In addition, provide dielectric unions in all open type piping systems (condensing water, domestic water, etc.) where dissimilar metals are to be joined.

3.5 SLEEVES

A. Provide for pipes passing through floors, walls or ceilings. Not required for floors that are core-drilled, except where floor is waterproofed.

B. Extend 1/8 in. above finished floor in finished areas. In above grade Mechanical Rooms and other areas with floor drains, use steel pipe sleeves 2 in. above floor.

C. Use steel pipe sleeves in bearing wall, structural slabs, beams and other structural surfaces, and where called for.

D. Sleeves shall be as small as practical, consistent with insulation, so as to preserve fire rating.

E. Fill abandoned sleeves with concrete.

F. Provide rubber grommet seals for pipes passing through ducts or air chambers or built-up housings.

3.6 SLEEVE PACKING

A. Seal void space at sleeves as follows:

1. Interior Locations: Firmly pack with fiberglass and caulk.

2. Cored Holes: Use sealing element.

3. Fire Rated, Partitions and Floor Slabs: Use fire rated sealing elements, materials and methods. Provide per manufacturer's instructions to maintain firestop.

4. Waterproofed Walls/Floors: Use waterproof sealing element, device or compound.

3.7 ESCUTCHEON PLATES

A. Provide polished chrome setscrew type escutcheon plates for all exposed piping passing through floors, walls or ceilings, in all rooms except in Boiler, Fan and Mechanical Rooms.

3.8 TESTS

A. Refer to Exhibit "B" at the end of this section for testing of Plumbing Systems.

1. Provide all necessary items to complete proper testing of work. Perform all testing in accordance with governing Codes, local utilities and other agencies having jurisdiction and as specified. Pay all costs to perform tests. Perform all testing in a safe manner. Isolate existing systems. Should any leaks, defective joints or defective construction be detected in sewers and/or floors or walls of appurtenant structures, they shall be permanently stopped. Should any defective pipes, fittings or accessories be discovered they shall be removed and replaced at the Contractor's expense.

2. Confirm in writing that tests have been conducted and successfully completed. Submit copy of the test report to Owner's Representative.

EXHIBIT "A" - PIPING MATERIALS (PLUMBING)

Compressed air-house	Type L copper	Wrought copper	Brazed
Clean Air	Stainless steel tube	Swagelok Medium Pressure	
Indirect Waste	Type M Copper	Wrought Copper	

EXHIBIT "B" - TESTING

SERVICE	TEST REQUIREMENTS
Compressed air clean air	Test with clean air or nitrogen at a pressure of 175 PSI for 24 hours.

END OF SECTION 22 10 10

This page intentionally left blank.

SECTION 23 05 00 - BASIC MECHANICAL REQUIREMENTS

PART 1 - GENERAL

1.1 ROUGHING

A. The Contract Drawings have been prepared in order to convey design intent and are diagrammatic only. Drawings shall not be interpreted to be fully coordinated for construction.

B. Due to small scale of Drawings, it is not possible to indicate all offsets, fittings, changes in elevation, interferences, etc. Make necessary changes in contract work, equipment locations, etc., as part of a contract to accommodate work to avoid obstacles and interferences encountered. Before installing, verify exact location and elevations at work site. **DO NOT SCALE** plans. If field conditions, details, changes in equipment or shop drawing information require an important rearrangement, report same to Owner's Representative for review. Obtain written approval for all major changes before installing.

C. Install work so that items both existing and new are operable and serviceable. Eliminate interference with removal of coils, motors, filters, belt guards and/or operation of doors. Provide easy, safe, and code mandated clearances at controllers, motor starters, valve access, and other equipment requiring maintenance and operation. Provide new materials, including new piping and insulation for relocated work.

D. Coordinate work with other trades and determine exact route or location of each duct, pipe, conduit, etc., before fabrication and installation. Coordinate with Architectural Drawings. Obtain from Owner's Representative exact location of all equipment in finished areas, such as thermostat, fixture, and switch mounting heights, and equipment mounting heights. Coordinate all work with the architectural reflected ceiling plans and/or existing Architecture. Mechanical and electrical drawings show design arrangement only for diffusers, grilles, registers, air terminals, lighting fixtures, sprinklers, speakers, and other items. Do not rough-in contract work without reflected ceiling location plans.

E. Before roughing for equipment furnished by Owner or in other Divisions, obtain from Owner and other Divisions, approved roughing drawings giving exact location for each piece of equipment. Do not "rough in" services without final layout drawings approved for construction. Cooperate with other trades to insure proper location and size of connections to insure proper functioning of all systems and equipment. For equipment and connections provided in this contract, prepare roughing drawing as follows:

1. Existing Equipment: Measure the existing equipment and prepare for installation in new location.

2. New Equipment: Obtain equipment roughing drawings and dimensions, then prepare roughing-in-drawings. If such information is not available in time, obtain an acknowledgement in writing, then make space arrangements as required with Owner's Representative.

1.2 EQUIPMENT AND MATERIAL REQUIREMENTS

A. Provide materials that meet the following minimum requirements:

1. Materials shall have a flame spread rating of 25 or less and a smoke developed rating of 50 or less, in accordance with NFPA 255.

2. All equipment and material for which there is a listing service shall bear a UL label.

3. Potable water systems and equipment shall be built according to AWWA Standards.

4. Gas-fired equipment and system shall meet AGA Regulations and shall have AGA label.

5. All electrical equipment and systems, as a whole, shall be tested and listed by an OSHA approved Nationally Recognized Testing Laboratory (NRTL) for the intended use in accordance with the applicable standards and have a physical label indicating such.

1.3 CONCEALMENT

A. **Conceal all contract work** above ceilings and in walls, below slabs, and elsewhere throughout building. If concealment is impossible or impractical, notify Owner's Representative before starting that part of the work and install only after their review. In areas with no ceilings, install only after Owner's Representative reviews and comments on arrangement and appearance.

1.4 CHASES

A. New Construction:

1. Certain chases, recesses, openings, shafts, and wall pockets will be provided as part of General Construction Trade. Mechanical and Electrical trades shall provide all other openings required for their contract work.

2. Check Architectural and Structural Design and Shop Drawings to verify correct size and location for all openings, recesses and chases in general building construction work.

3. Assume responsibility for correct and final location and size of such openings.

4. Rectify improperly sized, improperly located or omitted chases or openings due to faulty or late information or failure to check final location.

5. Provide 18 gauge galvanized sleeves and inserts. Extend all sleeves 2 in. above finished floor. Set sleeves and inserts in place ahead of new construction, securely fastened during concrete pouring. Correct, by drilling, omitted or improperly located sleeves. Assume responsibility for all work and equipment damaged during course of drilling. Firestop all unused sleeves.

6. Provide angle iron frame where openings are required for contract work, unless provided by General Construction trade.

B. In Existing Buildings:

1. Drill holes for floor and/or roof slab openings.

2. Multiple pipes smaller than 1 in. properly spaced and supported may pass through one 6 in. or smaller diameter opening.

3. Seal voids in fire rated assemblies with a fire-stopping seal system to maintain the fire resistance of the assembly. Provide 18 gauge galvanized sleeves at fire rated assemblies. Extend sleeves 2 in. above floors.

4. In wall openings, drill or cut holes to suit. Provide 18 gauge galvanized sleeves at shafts and fire rated assemblies. Provide fire-stopping seal between sleeves and wall in drywall construction. Provide fire stopping similar to that for floor openings.

1.5 PENETRATION FIRESTOPPING

A. Fire-Stopping for Openings Through Fire and Smoke Rated Wall and Floor Assemblies:

1. Provide materials and products listed or classified by an approved independent testing laboratory for "Penetration Fire-Stop Systems". The system shall meet the requirements of "Fire Tests of Penetrations Fire-Stops" designated ASTM E814.

2. Provide fire-stop system seals at all locations where piping, tubing, conduit, electrical busways/cables/wires, ductwork and similar utilities pass through or penetrate fire rated wall or floor assembly. Provide fire-stop seal between sleeve and wall for drywall construction.

3. The minimum required fire resistance ratings of the wall or floor assembly shall be maintained by the fire-stop system. The installation shall provide an air and watertight seal.

4. The methods used shall incorporate qualities which permit the easy removal or addition of electrical conduits or cables without drilling or use of special tools. The product shall adhere to itself to allow repairs to be made with the same material and permit the vibration, expansion, and/or contraction of any items passing through the penetration without cracking, crumbling and resulting reduction in fire rating.

5. Plastic pipe/conduit materials shall be installed utilizing intumescent collars.

6. Provide a submittal including products intended for use, manufacturer's installation instructions, and the UL details for all applicable types of wall and floor penetrations.

7. Fire-stopping products shall not be used for sealing of penetrations of non-rated walls or floors.

B. Acceptable Manufacturers:

1. Dow Corning Fire-Stop System Foams and Sealants.

2. Nelson Electric Fire-Stop System Putty, CLK and WRP.

3. S-100 FS500/600, Thomas & Betts.

4. Carborundum Fyre Putty.

5. 3-M Fire Products.

6. Hilti Corporation.

1.6 ACCESS PANELS

A. Provide access panels for required access to respective trade's work. Location and size shall be the responsibility of each trade. Access panels provided for equipment shall provide an opening not smaller than 22 in. by 22 in. Panels shall be capable of opening a minimum of 90 degrees. Bear cost of construction changes necessary due to improper information or failure to provide proper information in ample time. Access panels over 324 square inches shall have two cam locks. Provide proper frame and door type for various wall or ceiling finishes. Access panels shall be equal to "Milcor" as manufactured by Inland Steel Products Co., Milwaukee, Wisconsin. Provide General Construction trade with a set of architectural plans with size and locations of access panels.

1.7 CONCRETE BASES

A. Provide concrete bases for all floor mounted equipment. Provide 3,000 lb. concrete, chamfer edges, trowel finish, and securely bond to floor by roughening slab and coating with cement grout. Bases 4 in. high (unless otherwise indicated); shape and size to accommodate equipment. Provide anchor bolts in equipment bases for all equipment provided for the project, whether mounted on new concrete bases or existing concrete bases.

1.8 HVAC EQUIPMENT CONNECTIONS

A. Contractor is responsible for draining, filling, venting, chemically treating and restarting any systems which are affected by work shown on the Contract Documents unless specifically noted otherwise.

B. Provide final connections to all equipment as required by the equipment. Provide final connections, including domestic water piping, wiring, controls, and devices from equipment to outlets left by other trades. Provide equipment waste, drip, overflow and drain connections extended to floor drains.

C. Provide for Owner furnished and Contractor furnished equipment all valves, piping, piping accessories, traps, pressure reducing valves, gauges, relief valves, vents, drains, insulation, sheet metal work, controls, dampers, as required.

D. Refer to manufacturer drawings and specifications for requirements of laboratory equipment and special equipment. Verify connection requirements before bidding.

1.9 PLUMBING EQUIPMENT CONNECTIONS

A. Contractor is responsible for draining, filling, venting, chemically treating and restarting any systems which are affected by work shown on the Contract Documents unless specifically noted otherwise.

B. Provide roughing and final connections to all equipment. Provide loose key stops, sanitary "P" traps, tailpiece, adapters, gas or air cocks, and all necessary piping and fittings from roughing point to equipment. Provide installation of sinks, faucets, traps, tailpiece furnished by others. Provide cold water line with gate valve and backflow prevention device at locations called for. Provide continuation of piping and connection to equipment that is furnished by others. Provide relief valve discharge piping from equipment relief valves.

C. Provide valved water outlet adjacent to equipment requiring same. Provide equipment type floor drains, or drain hubs, adjacent to equipment.

D. Install controls and devices furnished by others.

E. Refer to Contract Documents for roughing schedules, and equipment and lists indicating scope of connections required.

F. Provide for Owner furnished and Contractor furnished equipment all valves, piping, piping accessories, traps, pressure reducing valves, gauges, relief valves, vents, drains, as required.

G. Refer to Manufacturer drawings and specifications for requirements of laboratory equipment and special equipment. Verify connection requirements before bidding.

1.10 ELECTRICAL EQUIPMENT CONNECTIONS

A. Provide complete power connections to all electrical equipment. Provide control connections to equipment. Heavy duty NEC rated disconnect ahead of each piece of equipment. Ground all equipment in accordance with NEC.

B. Provide for Owner furnished and Contractor furnished equipment all power wiring, electric equipment, control wiring, switches, lights, receptacles, and connections as required.

C. Refer to Manufacturer's drawings/specifications for requirements of laboratory equipment and special equipment. Verify connection requirements before bidding.

END OF SECTION 23 05 00

SECTION 23 05 04 - ELECTRIC WIRING

PART 1 - GENERAL

1.1 WORK INCLUDED

A. Provide labor, materials, equipment and services for the complete installation of motor control wiring and temperature control wiring as required in Contract Documents. Provide wiring and conduit, required to connect devices furnished as part of or adjunctive to the automatic temperature control system and for motor control regardless of the source of supply. Control wiring includes 120 volt and lower voltage wiring for control signals directing equipment operation. Control circuits shall be 120 volt maximum. Provide wiring in accordance with requirements specified in Division 26 "Electrical" and the National Electrical Code. Provide devices required for proper system operation, including special electrical switches, transformers, disconnect switches, relays, and circuit breaker protection.

B. Coordinate all work with Division 26 "Electrical".

1.2 WORK NOT INCLUDED

A. Power wiring for motors, motor starters and associated starting and control equipment, as well as the motor starters (except in the case of equipment specified to have packaged control/starters), are included in Division 26 "Electrical", unless otherwise called for.

1.3 QUALIFICATIONS

A. Wiring shall be installed in compliance with all requirements of Division 26 "Electrical".

1.4 SUBMITTALS

A. Provide complete wiring diagrams for equipment systems. Deliver wiring diagrams to proper trades in time for roughing of conduit, equipment connections, and avoid delay in construction schedule. Wiring diagrams and roughing information to be wired as part of the Work of Division 26, "Electrical", shall be clearly indicated.

PART 2 - PRODUCTS

2.1 PRODUCTS

A. Refer to Division 26 specifications for required wiring materials.

B. Control Wiring:

1. Unless specifically required otherwise by the BACS equipment manufacturer, all I/O wiring shall be twisted shielded cable. For communications, the BACS equipment manufacturer's installation guidelines and recommendations shall apply.

PART 3 - EXECUTION

3.1 GENERAL

A. Check electrical wiring pertaining to equipment for completeness and correctness of connections. Correct any misapplied motor and/or motor starter, improper thermal overload device, or device which fails to function and resultant damage, whether due to incorrect connections or improper information on wiring diagrams.

3.2 WIRING FOR CONTROL SYSTEMS

A. Provide motor control and temperature control wiring for equipment. All wiring shall be in conduit, unless otherwise noted. Refer to Section 260501 for type of conduit to be used in specific applications. All conduit containing control wiring shall be green. Provide 18 in. length flexible conduit at motors and devices subject to vibration. Conduit supported on 5 ft. centers. Do not attach directly to hot surfaces, piping, or ductwork. Control wiring shall be in separate conduit and raceway from all other wiring. Provide green grounding wire circuited from starter, and run ground wire through conduit to each remote auxiliary relay, pushbutton station, remote panel heating device, thermostat, or device with potentials in excess of 50 volts. For sensors with twisted shielded pair cable, the shield shall be ground at the panel and taped back at the sensor. Size ground wire as required by NEC.

B. All temperature control wiring shall be plenum rated type, meeting the requirements of NEC Article 300. Control wiring shall have green jacketing, and be color coded and labeled at all points of termination.

C. Control wiring shall be un-spliced from the controller to the sensor or device.

D. Provide pushbutton stations, pilot lights, selector switches, auxiliary starter contacts, and other devices required to provide specified functions.

E. Where allowable by Code and contract documents, temperature control wiring may be installed without conduit. Installation and wire insulation types shall be as described by NEC, Article 725. All low voltage wiring circuits 50 volt and under shall:

1. Be installed in electrical metal tubing (EMT) with compression fittings when in vertical chases, non-accessible ceilings, mechanical rooms or other spaces in which it is readily accessible.

2. Be installed in electrical metal tubing (EMT) with compression fittings or cable tray or raceway when in interstitial spaces.

3. Be installed per all additional code requirement, when installed in outdoor locations or any area subject to moisture.

4. Be plenum type, not installed in conduit, when installed above accessible ceiling spaces which are not laboratories or AHU's.

5. Be adequately supported and neatly organized using bridle rings spaced a maximum of 3 ft. on centers or other approved method when installed without conduit or cable tray.

6. Be installed in conduit in all cases not specifically covered by the above cases.

3.3 EQUIPMENT WIRING

A. Provide power and control wiring between sections of electrical radiation units, between shipping splits, and between remote panels, thermostats, disconnect switches, and their respective units. Provide control wiring from the package control system, to each respective electric heat coil, reheat coil or motor. Properly mount control package. Power wiring to and including disconnect switch shall be by Division 26, "Electrical".

3.4 FIELD WIRING IN STARTERS, CONTROLLERS AND PANELS

A. Wiring within starters, controllers, and temperature control panels, shall be routed neatly in gutter space, away from moving and/or heat producing parts. Provide suitably rated terminal blocks. Do not place more than two wire connections on pilot device or relay terminal. Where more than two circuit connections are required, use terminal blocks. Provide nylon insulated, ring spade terminal for all control wires. Cables and wires shall be neatly bundled and lashed with nylon cable straps.

END OF SECTION 23 05 04

This page intentionally left blank.

SECTION 23 05 13 - MOTORS

PART 1 - GENERAL

1.1 DESCRIPTION

A. Provide labor, materials, equipment and services as required for the complete installation designed in Contract Documents.

1.2 SUBMITTALS

A. Submit manufacturer's product data on all motors.

B. Product Data: For each motor, provide dimensions; mounting arrangements; frame type, enclosure type, location for conduit entries; shipping and operating weights; and manufacturer's technical data on features, performance, electrical ratings and characteristics.

C. Motor Performance Data: For each motor, include the following manufacturers' data:

1. Motor Performance: Percent Efficiency, Power Factor, Torque, RPM, Duty Rating and Design Category.

1.3 QUALITY ASSURANCE

A. Manufacturer Qualifications:

1. Motor manufacturer shall be based and headquartered in the United States of America and shall design and manufacture motors in the United States.

2. Motor manufacturer shall have over fifteen (15) years-experience in the motor industry and shall maintain active company-wide quality assurance program.

3. Motor manufacturer shall maintain an authorized service center within 60 miles of the project site, capable of providing training, parts and emergency maintenance and repairs.

B. Motor performance shall be warranted against material and workmanship defects by manufacturer's limited warranty and service policy for the period of at least 18 months from the day of shipment from the factory or the manufacturer's warehouse.

1. Premium efficiency motors shall be warranted for 36 months.

2. Severe duty motors (as applicable) shall be warranted for 60 months.

3. Extended warranty shall be offered for certain products or as agreed by additional terms and specified elsewhere.

PART 2 - PRODUCTS

2.1 MOTORS

A. General Requirements:

1. Motors built for 60 Hz operation, three phase for 1/2 HP and larger; single phase for 1/3 HP and smaller.

   a. In compliance with NEMA Standards, wound specifically for nameplate voltage, and selected for appropriate duty and environment.

   b. 1.15 minimum service factor at rated voltage and frequency. 1.0 service factor for inverter duty motors.

   c. Bearings: Bearings shall have a rated fatigue life of L-10 (B-10) of 150,000 hours for direct-coupled applications and 50,000 hours for belted applications minimum. Belted rating shall be based on radial loads and pulley sizes called out in NEMA MG 1-14.43. The calculation will be determined from the pulley centerline being at the end of the motor shaft.

   d. V-belt connected motors with adjustable slide rail bases and pulleys.

   e. Motors shall have Class F insulation system, with Class B temperature rise, insulation meeting NEMA MG 1 Part 31. Maximum allowable motor temperature rise for open drip-proof or totally enclosed fan cooled (TEFC) type at 1.15 service factor shall be 105°C above 40°C ambient with a total temperature rating of 155°C.

   f. NEMA locked rotor kVA code as required to match unit equipment torque characteristics.

   g. Single-phase motors shall be capacitor start, induction run, or split phase type.

   h. Polyphase motors shall be constant speed, squirrel cage, unless otherwise specified.

   i. Nameplates shall have as a minimum, all information as described in NEMA Standard MG-1-20.60. Motor nameplate shall be mounted on enclosure with stainless steel fastening pins.

2. Motors for use with adjustable speed drive applications shall be premium efficiency inverter duty rated in accordance with NEMA and be capable of a 20:1 turndown.

   a. These motors shall meet NEMA corona inception voltage requirements, withstanding peak voltages up to 1600 volts, and be manufactured in accordance with NEMA MG 1 Part 30 and 31.

   b. All motors controlled by adjustable speed drives shall be equipped with circumferential micro-fiber shaft grounding rings to provide protection from electrical bearing damage, to meet NEMA MG 1, 31.4.4.3. Provide AEGIS Bearing Protection Ring Kit (or equal), installed in accordance with the manufacturer's recommendation. For motors controlled by adjustable speed drives and 50hp or greater the motor shall have a ceramic electrically insulating bearing assembly on the opposite end of the grounding brushes

3. EC Motors:

   a. The motor shall be DC rated with permanent magnet rotor and automatically resetting integral overload protection.

   b. The unit shall meet the scheduled voltage, phase, control and other requirements indicated.

   c. Input Control: The unit shall have the following control features as a minimum:

      1) Packaged Unit controls: DDC input to include start/stop/status/general trouble.

      2) External Control: Minimum of Modbus and/or BACnet digital start/stop, digital trouble, 0-10VDC and 4-20mA speed control input.

   d. Unit insulation shall be Class F.

   e. Electrical termination lugs shall be suitable for the intended feed circuit.

   f. Ratings shall be 90% minimum power factor and 10% maximum total harmonic distortion.

   g. Speed control suitable for 100% to 10% operational capability.

   h. Fully programmable and reviewable settings and parameters.

   i. Suitable for operation at ambient conditions of 32 to 104 degrees F.

j. The power circuiting shall be separated from the low voltage control circuiting.

k. Output parameters where indicated:

1) Speed.

2) Trouble indication.

3) Overload indication.

4. Three phase motors rated 1 HP and greater shall be copper winding, re-lubable ball bearings, 1.15 service factor (1.0 service factor for inverter duty motors), premium efficiency, energy-saver type with a guaranteed NEMA nominal full-load efficiency, by IEEE Standard 112 Test Method "B". Efficiency rating shall appear on nameplate, and shall be not less than as follows; per NEMA MG 1 Part 12, Table 12-12, nominal minimum efficiencies:

MINIMUM NOMINAL FULL-LOAD MOTOR EFFICIENCY						
HP	**ODP MOTORS (RPM)**			**TEFC MOTORS (RPM)**		
	1200	**1800**	**3600**	**1200**	**1800**	**3600**
1.0	82.5	85.5	77	82.5	85.5	77.0
1.5	86.5	86.5	84	87.5	86.5	84
2.0	87.5	86.5	85.5	88.5	86.5	85.5
3.0	88.5	89.5	85.5	89.5	89.5	86.5
5.0	89.5	89.5	86.5	89.5	89.5	88.5
7.5	90.2	91.0	88.5	91.0	91.7	89.5
10	91.7	91.7	89.5	91.0	91.7	90.2
15	91.7	93.0	90.2	91.7	92.4	91.0
20	92.4	93.0	91.0	91.7	93.0	91.0
25	93.0	93.6	91.7	93.0	93.6	91.7
30	93.6	94.1	91.7	93.0	93.6	91.7
40	94.1	94.1	92.4	94.1	94.1	92.4
50	94.1	94.5	93.0	94.1	94.5	93.0
60	94.5	95.0	93.6	94.5	95.0	93.6
75	94.5	95.0	93.6	94.5	95.4	93.6
100	95.0	95.4	93.6	95.0	95.4	94.1
125	95.0	95.4	94.1	95.0	95.4	95.0
150	95.4	95.8	94.1	95.8	95.8	95.0
200	95.4	95.8	95.0	95.8	96.2	95.4

5. Nominal Motor Voltage Table:

Nominal System Voltage	Motor Nameplate
480V - 3 phase	460 volt
240V - 1 phase and 3 phase	230 volt
208V - 1 phase and 3 phase	200 volt
120V - 1 phase	115 volt

6. Motor Application; Provide the following enclosure types unless noted otherwise:

Environment/Location	Motor Enclosure Type
General Purpose	Open drip-proof, TEFC with cast iron frame, or encapsulated
Outdoors, below grade or high humidity	TEFC with cast iron frame
Hazardous	Explosion-proof
Packaged Refrigeration Compressors	Hermetic or semi-hermetic

7. Acceptable Manufacturers: Motors need not all be of the same manufacturer. Subject to the requirements of this section provide products by the following:

   a. General Electric Energy & Saver NEMA Premium Efficiency/(ODP); General Electric X$D Ultra NEMA Premium Efficiency (TEFC).

   b. Baldor-Reliance Super E.

   c. Marathon XRI.

PART 3 - EXECUTION

3.1 MOTORS

A. Furnished by equipment manufacturer and especially manufactured and/or selected, mounted, and installed for intended use. Install motors accessible for maintenance and belt adjustment.

END OF SECTION 23 05 13

This page intentionally left blank.

SECTION 23 05 16 - VIBRATION ABSORBERS, EXPANSION COMPENSATORS AND EXPANSION JOINTS

PART 1 - GENERAL

1.1 WORK INCLUDED

A. Provide labor, materials, equipment and services to perform operations required for the complete installation and related Work as required in Contract Documents.

1.2 SUBMITTALS

A. Submit product data on items provided for each piece of equipment.

B. Submit detailed fabrication drawings for all field fabricated anchors.

1.3 RELATED WORK SPECIFIED ELSEWHERE

A. Vibration Isolation for Piping: Section 230548 - Vibration Isolation of Mechanical Systems.

B. Anchors and Guides: Section 232010 - Piping Systems and Accessories.

PART 2 - PRODUCTS

2.1 FLEXIBLE EXPANSION LOOPS

A. Provide flexible expansion loops of size and type as shown on the drawings, which will provide a flexible pipe loop that will absorb and compensate multi-plane movements simultaneously as well as reduce piping stress.

B. Materials of construction and end fittings type shall be consistent with pipe material and equipment/pipe connection fittings.

C. Flexible loops shall consist of two (2) flexible sections of hose and braid, two (2) 90° elbows and a 180° return assembled in such a way that the piping does not change direction, but maintains its course along a single axis. Flexible loops shall have a factory supplied, center support nut located a t the bottom of the 180° return, and a drain/air release plug.

D. Flexible loops shall impart no thrust loads to system support anchors or building structure. Loops shall be installed in a neutral, pre-compressed or pre-extended condition as required for the application.

E. Provide nested construction loops when installed in multiples.

F. Provide guides and anchors as specified.

G. Loops shall be at 0 in. deflection at time of installation based upon 50°F ambient temperature. If the installation temperature is to be below 50°F, it is the Contractor's responsibility to review the installation with the Engineer before proceeding.

H. Make: Mason, or equal.

PART 3 - EXECUTION

3.1 GENERAL REQUIREMENTS

A. Equipment installed in accordance with the manufacturer's installation instructions.

B. Piping shall be properly anchored to control the direction of expansion and guided at the entrance to expansion devices.

C. Expansion compensators and joints are sized based upon an ambient temperature of 50°F at the time of installation. If the installation temperature is to be below 50°F, it is the Contractor's responsibility to review the installation with the Engineer before proceeding.

END OF SECTION 23 05 16

SECTION 23 05 19 – GAUGES AND THERMOMETERS

PART 1 - GENERAL

1.1 WORK INCLUDED

A. Provide labor, materials, equipment and services to perform operations required for the complete installation and related Work as required in Contract Documents.

1.2 SUBMITTAL

A. Submit product data for gauges and thermowells.

PART 2 - PRODUCTS

2.1 WATER PRESSURE GAUGES

A. On devices such as pumps, strainers, coils, etc., where the differential pressure is the desired information, install only one pressure gauge with valved connections to the upstream and downstream taps. Include P/T test port in addition to the pressure gauge. Provide a second set of isolating valves at the gauge if gauge location is not within reach of tap points.

B. Pressure gauges shall be stainless steel case, non-repairable, silicone filled with minimum 3 1/2" diameter case. Gauges shall have 3% accuracy over the appropriate range of 0-30 psi, 0-60 psi, or 0-160 psi and include a shut-off ball valve (gauge cocks and needle valves are not permitted). Include a pigtail cooling loop on all steam gauges. Scale shall be selected to provide a reading point at mid-scale during normal operation. No snubbers.

C. Make: Trerice, Weiss, Weksler.

2.2 PRESSURE/TEMPERATURE TEST PLUGS

A. 1/4 in. NPT plug shall be capable of reading either a pressure or temperature. 1/8 in. o.d. dual seal core of Nordel 275°F with zero leakage from vacuum to 500 psig.

B. Pressure / temperature test ports shall be provided on each coil bank, heat exchanger, fan coil, and at all permanent pressure gauge locations. Use extended body style to allow for insulation thickness. Seals shall be appropriate for operating water temperature and pressure as follows:

1. Chilled water, Cold water - Neoprene seat.

C. Makes: Peterson Equipment Company, Sisco P/T plugs.

PART 3 - EXECUTION

3.1 GENERAL

A. Provide where called for in the drawings and as noted below.

B. All gauges shall be provided with pressure ranges appropriate for the system in which they are installed. Select to operate in the middle third of the range under normal operating conditions. Gauges shall be suitable for the environment of their installed location.

3.2 WATER PRESSURE GAUGES

A. Process chilled water piping: 0 to 60 psi range.

3.3 TEST PLUG

A. Provide test plugs at locations as called for.

END OF SECTION 23 05 19

SECTION 23 05 23 - VALVES

PART 1 - GENERAL

1.1 WORK INCLUDED

A. Provide labor, materials, equipment and services as required for the complete installation and related Work designed in Contract Documents.

1.2 SUBMITTAL

A. Valves and accessories.

1.3 GENERAL

A. Unless otherwise noted, all valves for shut-off and bypass service shall be ball valves, 2" and below, and butterfly valves 2-1/2" and above. Ball valves are acceptable in 2-1/2" and 3" copper only.

B. Valves for balancing operations shall not be ball or butterfly.

C. All end connections shall be the same as is used for fittings for 2" and below. Two and one half inches (2-1/2") and above, valves shall be flanged. Solder joints are also acceptable in 2-1/2" and 3" copper piping systems.

D. Provide valve tags as called for in Specification Section 230553.

E. A manufacturer's valve tag shall be on all valves identifying the valve type and major component materials.

F. Install valves after welding adjacent to valve is complete to protect seat and disk.

G. Insulated valves shall have extended handle stems.

H. All valves for all services shall be fully bi-directional and suitable for dead end service.

I. On all valves the packing compression is to be independent of the stem, ball or handle systems. All valve stems are to be blowout proof. Packing shall be accessible without disturbing the insulation.

J. Plug or gate valves shall not be used on any services without approval by Facilities Engineering.

K. All valves used for vent or drain service on water systems shall be ball valves and have a brass hose connection with cap and chain.

PART 2 - PRODUCTS

2.1 BALL VALVES, GENERAL DUTY

A. For all water services, low pressure steam, low pressure condensate and all other normal non-corrosive services, ball valves shall be:

1.	Body	Bronze
2.	Body Style	Standard Port, two piece
3.	Trim	316 Stainless Steel Ball and Stem, with stem extension to raise handle out of insulation
4.	Seat	Reinforced Teflon (RTFE), 15% glass filled double seal
5.	Seat Working P/T Rating	300 psig @ 250°F Minimum
6.	Body Working P/T Rating	300 psig @ 300°F Minimum
7.	WOG Rating	300 psig Minimum
8.	Saturated Steam Rating	150 psig Minimum
9.	Actuator	Lever handle

10. Acceptable makes: Apollo 70LF-140; Apollo 70-240; Nibco T-580-70-66, Nibco S-580-70-66; Watts B6000-SS, Watt B6001-SS.

B. For strainer blowdown, ball valves shall be:

1.	Body	Bronze
2.	Body Style	Full Port, two piece
3.	Trim	316 Stainless Steel Ball and Stem, with stem extension to raise handle out of insulation
4.	Seat	PTFE or TFE
5.	Seat Working P/T Rating	300 psig @ 250°F Minimum
6.	Body Working P/T Rating	300 psig @ 300°F Minimum
7.	WOG Rating	300 psig Minimum
8.	Saturated Steam Rating	150 psig Minimum

9. Actuator Lever handle

10. Acceptable makes: Apollo 70-140-HC; Apollo 70-240-HC; Nibco S-580-70-66-HC.

2.2 BUTTERFLY VALVES

A. General:

1. All lugged butterfly valves shall be fully bi-directional and bi-directionally dead-endable to the full pressure rating of the seat. This is defined to mean that the seat rating is not reduced when pressure is applied in either direction and the valve is capable of serving as a blank flange, when bolted to the end of a line from either side of the valve body and no mating flange is attached. The means of attaching the body to the pipe flange, and of attaching the seat ring to the body shall meet the ANSI class rating of the valve without mechanical failure. This requirement normally results in partially lugged butterfly valves not being acceptable.

2. Packing shall be able to be tightened without removing the insulation.

3. External disc position indicators shall be provided.

4. Valves must be fully factory assembled, set and tested.

5. Gear operators on steam valves shall be spaced 4" (four inches) above packing assembly.

6. Install all steam valves with the stem at least 30° off vertical to protect the bottom bearing from debris.

7. On all butterfly valve actuators located greater than 5' (five feet) above the floor, install chainwheels to 5' (five feet) above the floor when the design engineer determines valve service is critical.

8. Handwheel gear operators shall be provided on all butterfly valves for low and high pressure steam and condensate service. This is to allow for slow opening, which minimizes the hydraulic, thermal, flow shock and differential shock stresses on the system due to water hammer. The handwheel gear operator is slow acting. Proper warm-up procedures shall be followed to prevent water hammer.

B. Butterfly Valves, General Duty:

1. For all water services and all other normal non-corrosive services, butterfly valves shall be single offset and have the following requirements:

a. Body: Ductile Iron or Cast Iron

b.	Body Style:	Fully lugged
c.	Trim:	316 or 17-4 pH Stainless Steel
d.	Disc:	Stainless Steel
e.	Seat:	Resilient Seat, fully bi-directional dead-endable, EPDM
f.	Seat Working P/T Rating:	150 psig @ 250°F Minimum
g.	Body Working P/T Rating:	ANSI 150
h.	Actuator:	4" and above - Handwheel Gear Operator Under 4" - Locking Lever Handle

2. Acceptable makes, Valve type V-4: Keystone Series 60; Nibco LD-3022; Watts BF-03.

2.3 AIR VENT VALVES

A. On chilled water and glycol service use manual vents only. Do not use automatic vent valves.

PART 3 - EXECUTION

3.1 INSTALLATION

A. General:

1. Provide valves of type called for and where required to service equipment.

2. Provide at major building and systems sections.

3. Provide chain wheels, guides, and chain loops for valves, where called for or in Mechanical Rooms where valves are mounted higher than 8’-0” AFF.

4. Isolating valves for individual fan convectors, room units, terminal units, or other similar apparatus may be inside cabinet or at connection to branch mains where accessible.

5. Locate valves with handles at horizontal position when 5 feet or more above the floor, for greater visibility. Otherwise, locate valves with handles at or above horizontal position. Swing check valves in upright position only.

6. Butterfly valves may be used for water service over 2 in. unless otherwise noted.

7. Ball valves may be used for water service through 3 in., unless otherwise noted.

8. Provide hose threaded valves at low points, strainers, equipment, and as called for.

END OF SECTION 23 05 23

This page intentionally left blank.

SECTION 23 05 48 - VIBRATION ISOLATION OF MECHANICAL SYSTEMS

PART 1 - GENERAL

1.1 DESCRIPTION

A. Furnish and install vibration control devices, materials, and related items. Perform all work as shown on the Drawings and as specified herein to provide complete vibration isolation systems in proper working order.

1.2 MATERIAL AND EQUIPMENT

A. All vibration isolation mounts shall be supplied by one of the following approved manufacturers:

1.	Mason Industries Inc. (Hauppauge, NY)	M.I.
2.	Kinetics Noise Control Inc. (Dublin, OH)	K.N.C.
3.	Vibration Mountings & Controls Group. (Butler, NJ)	VMC Group
4.	Vibration Eliminator Co. (Long Island City, NY)	V.E.C.

1.3 QUALITY ASSURANCE

A. Coordinate the size, location and special requirements of vibration isolation equipment and systems with other trades. Coordinate plan dimensions with size of housekeeping pads.

B. Provide vibration isolators of the appropriate sizes, with the proper loading to meet the specified deflection requirements.

C. Supply and install any incidental materials such as mounting brackets, attachments and other accessories as may be needed to meet the requirements stated herein even if not expressly specified or shown on the Drawings, without claim for additional payment.

D. Verify correctness of equipment model numbers and conformance of each component with manufacturer's specification.

E. Should any rotating equipment cause excessive noise or vibration when properly installed on the specified isolators, the Contractor shall be responsible for re-balancing, realignment, or other remedial work required to reduce noise and vibration levels. Excessive is defined as exceeding the manufacturer's specifications for the unit in question.

F. Upon completion of work, the Architect or the Architect's Representative shall inspect the installation and shall inform the installing contractor of any further work that must be completed. Make all adjustments as directed by the Architect that result from the final inspection. This work shall be done before vibration isolation systems are accepted.

1.4 SUBMITTALS

A. Refer to related sections elsewhere for procedural instruction for submittals.

B. Before ordering any products, submit shop drawings of the items listed below. The shop drawings must be completed when submitted and must be presented in a clear, easily understood form. Incomplete or unclear presentation of shop drawings may be reason for rejection of the submittal.

C. A complete description of products to be supplied, including product data, dimensions, specifications, and installation instructions.

D. Detailed selection data for each vibration isolator supporting equipment, including:

1. The equipment identification mark.

2. The isolator type.

3. The actual load.

4. The static deflection expected under the actual load.

5. The specified minimum static deflection.

6. Steel rails, steel base frames, and concrete inertia bases showing all steel work, reinforcing, vibration isolator mounting attachment method, and location of equipment attachment bolts.

7. Special details necessary to convey complete understanding of the work to be performed.

E. Submission of samples may be requested for each type of vibration isolation device. After approval, samples will be returned for installation at the job if requested. All costs associated with submission of samples shall be borne by the Contractor.

PART 2 - PRODUCTS

2.1 VIBRATION ISOLATOR TYPES

A. General:

1. All springs installed out-of-doors shall be zinc electroplated or powder-coated after fabrication.

Hardware and other metal parts shall be cadmium-plated or galvanized. Galvanizing shall meet ASTM Salt Spray Test Standards and Federal Test Standard No. 14.

2. All isolators installed out-of-doors shall have base plates with bolt holes for fastening the isolators to the support members.

3. Isolator types are scheduled to establish minimum standards. At the Contractor's option, labor-saving accessories can be an integral part of isolators supplied to provide initial lift of equipment to operating height, hold piping at fixed elevations during installation and initial system filling operations, and similar installation advantages. Accessories and seismic restraint features must not degrade the isolation performance of the isolators.

4. Static deflection of isolators shall be as provided in the EXECUTION section and as shown on the Drawings. All static deflections stated are the minimum acceptable deflection for the mounts under actual load. Isolators selected solely on the basis of rated deflections are not acceptable and will be disapproved.

B. Type HN (Hanger Neoprene):

1. Vibration isolator hangers shall consist of a neoprene-in-shear element contained within a steel housing. A neoprene neck brushing shall be provided where the hanger rod passes through the hanger housing to prevent the rod from contacting the hanger housing. The diameter of the hole in the housing shall be sufficient to permit the hanger rod to swing through a 30° arc before contacting the hanger housing.

2. Type HN isolators shall be one of the following products or approved equal:

a.	Type HD	M.I.
b.	Type RH or FH	K.N.C.
c.	Type RHD or RFD	VMC Group

2.2 RESILIENT PENETRATION SLEEVE/SEAL

A. Resilient penetration sleeve/seals shall be field-fabricated from a pipe or sheet metal section that is 1/2 in. to 3/4 in. larger than the penetrating element in all directions around the element, and shall be used to provide a sleeve through the construction penetrated. The sleeve shall extend 1 in. beyond the penetrated construction on each side. The space between the sleeve and the penetrating element shall be packed with glass fiber or mineral wool to within 1/4 in. of the ends of the sleeve. The remaining 1/4 in. space on each end shall be filled with acoustical sealant to form an airtight seal. The penetrating element shall be able to pass through the sleeve without contacting the sleeve. Refer to details on Drawings.

2.3 RESILIENT LATERAL SUPPORTS

A. These units shall either be a standard product of the vibration isolation mounting manufacturer, or be custom fabricated from standard components. These units shall incorporate neoprene isolation elements similar to Type FN that are specifically designed to provide resilient lateral bracing of ducts or pipe.

B. Resilient lateral supports shall be one of the following products or approved equal:

1. Type ADA M.I.

2. Type RGN K.N.C.

3. Type MDPA VMC Group

2.4 THRUST RESTRAINTS

A. Thrust restraints shall consist of a spring element in series with a neoprene pad. The unit shall be designed to have the same deflection due to thrust-generated loads as specified for the isolators supporting the equipment. The spring element shall be contained within a steel frame and be designed so it can be pre-compressed at the factory to allow for a maximum of 1/4 in. movement during starting or stopping of the equipment. Allowable movement shall be field-adjustable. The assembly shall be furnished complete with rods and angle brackets for attachment to both equipment and the adjacent fixed structural anchor. The thrust restraints shall be installed on the discharge of the fan so that the restraint rods are in tension. Assemblies that place the rods in compression are not acceptable. The holes in the spring restraint brackets through which the restraint rods pass must be oversized to prevent contact between the brackets and rods.

B. Thrust restraints shall be one of the following products or an approved equal:

1. Type WB M.I.

2. Type HSR K.N.C.

3. Type HTR VMC Group

2.5 GROMMETS

A. Grommets shall be specially formed to prevent bolts from directly contacting the isolator base plate, and shall be sized so that they will be loaded within the manufacturer's recommended load range.

B. Grommets shall either be custom made by combining a neoprene washer and sleeve, or be one of the following products or an approved equal:

1. Type Isogrommets MBIS, Inc. (Bedford Heights, OH)

2. Type WB Barry Controls (Brighton, MA)

3. Type HG Mason Industries Inc., (Hauppauge, NY)

2.6 ACOUSTICAL SEALANT

A. Sealants for acoustical purposes as described in this specification shall be silicone or one of the non-setting sealants indicated below:

1. Acoustical sealant D.A.P.

2. BR-96 Pecora

3. Acoustical sealant Tremco

4. Acoustical sealant U.S.G.

PART 3 - EXECUTION

3.1 APPLICATION

A. General:

1. Refer to the PRODUCTS section of this specification for vibration isolation devices identified on the Drawings or specified herein.

2. The static deflection of all isolators specified herein are the minimum acceptable deflections for the mounts under actual load. Isolators selected solely on the basis of rated deflection are not acceptable and will be disapproved.

B. Major Equipment:

1. Unless otherwise shown or specified on Drawings, all floor-mounted major equipment shall be set on concrete housekeeping pads.

2. Types and minimum static deflections of vibration isolation devices for major equipment items shall be as specified hereunder.

3. Flexible duct connections shall be installed at all fan unit intakes, fan unit discharges, and wherever else shown on the Drawings.

4. Electrical connections to vibration-isolated equipment shall be flexible, as called for in the electrical portion of the specification.

5. Thrust restraints shall be installed on all suspended fans and on all floor-mounted fans developing 4 in. or more of static pressure, unless the horizontal component of the thrust force can be demonstrated to be less than 10% of the equipment weight.

C. Equipment Vibration Isolation Schedule:

TYPE	VIBRATION ISOLATOR TYPE	MINIMUM STATIC DEFLECTION (In.)	EQUIPMENT BASE
Fan Coil Units	HN	.30	----

D. Miscellaneous Mechanical Equipment:

1. Miscellaneous pieces of mechanical equipment such as converters, pressure reducing stations, dryers, strainers, storage tanks, condensate receiver tanks and expansion tanks which are connected to isolated piping systems shall be vibration-isolated from the building structure by Type NP or Type HN isolators (selected for .01 in. static deflection) unless their position in the piping system requires a higher degree of isolation as called for under "Pipe Isolation".

E. Pipes:

1. All chilled water, condenser water, hot water, steam main and engine exhaust piping shall be isolated from the building structure within the following limits:

a. Within mechanical rooms.

b. Within 50 ft. total pipe length of connected vibration-isolated equipment (chillers, pumps, air handling units, pressure reducing stations, etc.).

c. Everywhere for piping that is 5 in. or larger.

d. Piping shall be isolated from the building structure by means of vibration isolators, resilient lateral supports, and resilient penetration sleeve/seals.

e. Isolators for the first three support points adjacent to connected equipment shall achieve one half the specified static deflection of the isolators supporting the connected equipment. When the required static deflection of these isolators is greater than 1/2 in., Type FSN or Type HSN isolators shall be used. When the required static deflection is less than or equal to 1/2 in., Type FN or Type HN isolators shall be used. All other pipe support isolators within the specified limits shall be either Type FN or Type HN achieving at least 1/4 in. static deflection.

f. Where lateral support of pipes is required within the specified limits, this shall be accomplished by use of resilient lateral supports.

g. Pipes penetrating the building construction shall be isolated from the building structure by use of resilient penetration sleeve/seals.

3.2 INSTALLATION OF VIBRATION ISOLATION EQUIPMENT

A. General:

1. Locations of all vibration isolation devices shall be selected for ease of inspection and adjustment as well as for proper operation.

2. Installation of vibration isolation equipment shall be in accordance with the manufacturer's instructions.

B. Isolators:

1. All vibration isolators shall be aligned squarely above or below mounting points of the supported equipment.

2. Isolators for equipment with bases shall be located on the sides of the bases which are parallel to the equipment shaft unless this is not possible because of physical constraints.

3. Locate isolators to provide stable support for equipment, without excess rocking. Consideration shall be given to the location of the center of gravity of the system and the location and spacing of the isolators. If necessary, a base with suitable footprint shall be provided to maintain stability of supported equipment, whether or not such a base is specifically called for herein.

4. Hanger rods for vibration-isolated support shall be connected to structural beams or joists, not the floor slab between beams and joists. Provide suitable intermediate support members as necessary.

5. Vibration isolation hanger elements shall be positioned as high as possible in the hanger rod assembly, but not in contact with the building structure, and so that the hanger housing may rotate a full 360° about the rod axis without contacting any object.

6. Parallel running pipes may be hung together on a trapeze, that is isolated from the building. Isolator deflections must be the greatest required by the provisions for pipe isolation for any single pipe on the trapeze. Do not mix isolated and un-isolated pipes on the same trapeze.

7. Pipes, ducts and equipment shall not be supported from other pipes, ducts and equipment.

8. Resiliently isolated pipes, ducts and equipment shall not come in rigid contact with the building construction or rigidly supported equipment.

9. Adjust all leveling bolts and hanger rod bolts so that the isolated equipment is level and in proper alignment with connecting ducts or pipes.

C. Thrust Restraints:

1. Thrust restraints shall be attached on each side of the fan at the vertical centerline of thrust. The two rods of the thrust restraints shall be parallel to the thrust force. This may require custom brackets or standoffs. The body of the thrust restraint shall not come in contact with the connected elements. Thrust restraints shall be adjusted to constrain equipment movement to the specified limit.

D. Grommets:

1. Where grommets are required at hold down bolts of isolators, bolt holes shall be properly sized to allow for grommets. The hold down bolt assembly shall include washers to distribute load evenly over the grommets. Bolts and washers shall be galvanized.

E. Resilient Penetration Sleeve/Seals:

1. Maintain an airtight seal around the penetrating element and prevent rigid contact between the penetrating element and the building structure. Fit the sleeve tightly to the building construction and seal airtight on both sides of the construction penetrated with acoustical sealant.

END OF SECTION 23 05 48

SECTION 23 05 53 – MECHANICAL IDENTIFICATION

PART 1 - GENERAL

1.1 WORK INCLUDED

A. Provide labor, materials, equipment and services as required for the complete installation designed in Contract Documents.

1.2 QUALIFICATION

A. All identification devices shall comply with ANSI A13.1 for lettering size, length of color field, colors and viewing angles.

1.3 SUBMITTALS

A. Submit manufacturer's technical product data and installation instructions for each identification material and device. Submit valve schedule for each piping system typewritten on an 8-1/2 in. x 11in. (Minimum) indicating valve number, location, and valve function. Submit schedule of pipe, equipment and name identification for review before stenciling or labeling.

1.4 MAKES

A. Allen Systems, Inc.; Brady (W.H.) Co.; Signmark Div.; Industrial Safety Supply Co., Inc.; Seton Name Plate Corp.

PART 2 - PRODUCTS

2.1 GENERAL

A. Provide manufacturer's standard products of categories and types required for each application. In cases where this is more than one type specified for an application, selection is installer's option, but provide single selection for each product category.

B. All adhesives used for labels in the interior of the building shall comply with the maximum Volatile Organic Compound (VOC) limits as called for in the current version of U.S. Green Building Council LEED Credits EQ 4.1 and EQ 4.2.

C. For work within an existing building, the mechanical identification shall meet the intent of this section, but match the Owner's existing identification symbology.

2.2 PIPING IDENTIFICATION

A. Identification Types:

1. Pressure Sensitive Type: Provide manufacturer's standard pre-printed, permanent adhesive, color coded, pressure sensitive vinyl pipe markers complying with ANSI A13.1. Provide a 360° wrap of flow arrow tape at each end of pipe label.

B. Lettering:

1. Piping labeling shall conform to the following list:

Pipe Function	Identification
CHILLED WATER SUPPLY	CWS
CHILLED WATER RETURN	CWR
CHESS EXP SUPPLY	CES
CHESS EXP RETURN	CER
CHESS OPT SUPPLY	COS
CHESS OPT RETURN	COR
CESR85 SUPPLY	C85S
CESR85 RETURN	C85R

2.3 VALVE IDENTIFICATION

A. Valve Tags:

1. Standard brass valve tags, 2 in. diameter with 1/2 in. high numerals. Identify between heating and plumbing services with 1/4 in. letters above the valve number. Lettering to be stamped and in-filled black. Seton, or equal.

a. Valve-tag Fasteners: Brass wire-link or beaded chain; or S-hook.

B. Valve Chart:

1. Provide valve chart for all valves tagged as a part of this project. Frame and place under clear glass. Hang in Mechanical Room.

2. Valve chart to include as a minimum, valve #, valve size, valve type, valve service description, valve location.

2.4 EQUIPMENT LABELS

A. Metal Labels for Equipment:

1. Material and Thickness: Brass, 0.032 in. minimum thickness, and having predrilled or stamped holes for attachment hardware.

2. Minimum Label Size: Length and width vary for required label content, but not less than 2-1/2 in. by 3/4 in.

3. Minimum Letter Size: 1/4 in. for name of units if viewing distance is less than 24 in., 1/2 in. for viewing distances up to 72 in. and proportionately larger lettering for greater viewing distances. Include secondary lettering two-thirds to three-fourths the size of principal lettering.

4. Fasteners: Stainless-steel rivets or self-tapping screws.

5. Adhesive: Contact-type permanent adhesive, compatible with label and with substrate.

B. Plastic Labels for Equipment:

1. Material and Thickness: Multilayer, multicolor, phenolic (micarta) labels for mechanical engraving, 1/8 in. thick, and having predrilled holes for attachment hardware.

2. Letter Color: White.

3. Background Color: Black.

4. Maximum Temperature: Able to withstand temperatures up to 160 F.

5. Minimum Label Size: Length and width vary for required label content, but not less than 2-1/2 in. by 3/4 in.

6. Minimum Letter Size: 1/4 in. for name of units if viewing distance is less than 24 in., 1/2 in. for viewing distances up to 72 in., and proportionately larger lettering for greater viewing distances. Include secondary lettering two-thirds to three-fourths the size of principal lettering.

7. Fasteners: Stainless-steel rivets or self-tapping screws.

8. Adhesive: Contact-type permanent adhesive, compatible with label and with substrate.

C. Label Content: Include equipment's Drawing designation or unique equipment number.

D. Equipment Label Schedule: For each item of equipment to be labeled, on 8-1/2 in. x 11 in. bond paper. Tabulate equipment identification number and identify Drawing numbers where equipment is indicated (plans, details, and schedules), plus the Specification Section number and title where equipment is specified. Equipment schedule shall be included in operation and maintenance data.

E. Provide for the following equipment:

1. Fan Coil Units

2.5 ABOVE CEILING EQUIPMENT LOCATOR

A. 3/4 in. diameter adhesive stickers placed on ceiling grid. Color coded. Provide for the following:

1. HVAC valves - ORANGE

PART 3 - EXECUTION

3.1 GENERAL

A. Provide valve tags for all valves provided on project, except for service valves at terminal equipment.

B. Provide piping identification with directional flow arrows for all piping on project, at maximum intervals of 20 feet. For piping installed through rooms, provide at least one pipe label in each room, for each pipe function.

END OF SECTION 23 05 53

SECTION 23 05 93 – TESTING, ADJUSTING AND BALANCING

PART 1 - GENERAL

1.1 WORK INCLUDED

A. Provide labor, materials, equipment and services to perform operations required for complete adjusting and balancing Work as required in Contract Documents.

B. This Section specifies the requirements and procedures of, mechanical systems testing, adjusting, and balancing. Requirements include measurement and establishment of the fluid quantities of the mechanical systems as required to meet design specifications, and recording and reporting the results.

C. Test, adjust, and balance the following mechanical systems:

1. Hydronic systems; including constant flow and variable flow systems.

D. This Section does not include:

1. Testing boilers and pressure vessels for compliance with safety codes;

2. Specifications for materials for patching mechanical systems;

3. Specifications for materials and installation of adjusting and balancing devices. If devices must be added to achieve proper adjusting and balancing, refer to the respective system sections for materials and installation requirements.

4. Requirements and procedures for piping and ductwork systems leakage tests.

1.2 SUBMITTALS

A. Provide information in report form listing items required by specifications. Results shall be guaranteed. Contractor shall be subject to recall to site to verify report information before acceptance of the report by the Owner's Representative.

B. Strategies and Procedures Plan: Within thirty (30) days of Contractor's Notice to Proceed, submit testing and balancing strategies and step-by-step procedures as specified in Section 3.1.B, "Preparation", and consistent with those listed in Part 3 of this specification.

C. System Readiness Checklists: Within thirty (30) days of Contractor's Notice to Proceed, AABC agency shall provide system readiness checklists as specified in Section 3.1.C, "Preparation", to be used and filled out by the installing contractors verifying that systems are ready for Testing and Balancing.

D. Examination Report: Provide a summary report of the examination review required in Section 3.1.D to the Engineer, documenting issues that may preclude the proper testing and balancing of the systems.

E. Certified report format shall consist of the following:

1. Title sheet with job name, contractor, engineer, date, balance contractor's name, address, telephone number and contact person's name and the balancing technician's name.

2. Individual test sheets for air handlers, terminal units, air distribution, exhaust fans, duct traverses, pumps, air handling coils, reheat coils, radiation, convectors, cabinet unit heaters and unit ventilators.

3. Manufacturer's pump and fan curves for equipment installed with design and actual operating conditions indicated.

4. One complete set of reproducible record contract drawings marked up with terminal unit numbers, room numbers, testports locations, register, grille and diffuser numbers to correlate test sheet. Data shall be provided with reports.

5. TAB Report Forms: Use standard forms from AABC's "National Standards for Testing and Balancing Heating, Ventilating, and Air Conditioning Systems." or NEBB's "Procedural Standards for Testing, Adjusting, and Balancing of Environmental Systems".

F. Provide record of fume hood testing in the final test & balance report.

1.3 DEFINITIONS

A. System testing, adjusting and balancing is the process of checking and adjusting all the building environmental systems to produce the design objectives. It includes:

1. The balance of air and water distribution;

2. Adjustment of total system to provide design quantities;

3. Electrical measurement;

4. Verification of performance of all equipment and automatic controls.

B. Test: To determine quantitative performance of equipment.

C. Adjust: To regulate the specified fluid flow rate and air patterns at the terminal equipment (e.g., reduce fan speed, throttling).

D. Balance: To proportion flows within the distribution system (submains, branches, and terminals) according to specified design quantities.

E. Procedure: Standardized approach and execution of sequence of work operations to yield reproducible results.

F. Report Forms: Test data sheets arranged for collecting test data in logical order for submission and review. This data should also form the permanent record to be used as the basis for required future testing, adjusting, and balancing.

G. Terminal: The point where the controlled fluid enters or leaves the distribution system. There are supply inlets on water terminals, supply outlets on air terminals, return outlets on water terminals, and exhaust or return supply or outside air inlets or outlets on terminals such as registers, grilles, diffusers, and louvers.

H. Main: Duct or pipe containing the system's major or entire fluid flow.

I. Submain: Duct or pipe containing part of the systems' capacity and serving two or more branch mains.

J. Branch Main: Duct or pipe serving two or more terminals.

K. Branch: Duct or pipe serving a single terminal.

1.4 QUALIFICATIONS

A. Follow procedures and methods published by one or more of the following:

1. Associated Air Balance Council (AABC) or National Environmental Balancing Bureau (NEBB).

2. Individual manufacturer requirements and recommendations.

B. Maintain qualified personnel at project for system operation and trouble shooting. TAB contractor shall change sheaves and perform mechanical adjustments in conjunction with balancing procedure.

C. Balancing contractor shall be current member of AABC or NEBB.

D. Instrumentation Type, Quantity, Accuracy, and Calibration: As described in the *AABC National Standards for Total System Balance.*

1.5 GENERAL REQUIREMENTS

A. Before concealment of systems visit the job site to verify and advise on type and location of balancing devices and test points. Make changes as required to balance facilities.

B. Place systems in satisfactory operating condition.

1. Adjusting and balancing shall be accomplished as soon as the systems are complete and before Owner takes possession.

2. Prior to balancing, adjust balancing devices for full flow; fill, vent and clean hydronic systems, replace temporary filters and strainers.

3. Initial adjustment and balancing to quantities as called for or as directed by the engineer, to satisfy job conditions.

4. All outdoor conditions (Db, Wb, and a description of the weather conditions) at the time of testing shall be documented in the report.

5. Provide sheaves and belts as required to meet system performance requirements for all belt-driven fan motors 10 HP and greater. Adjust and align sheaves to obtain proper settings and operation. Verify motors are not overloading.

6. Installing contractor shall replace balancing cocks, flow balancers and dampers in new systems that cannot be manipulated to satisfy balancing requirements.

7. Identify flow balancers, balancing cocks and dampers in existing systems that cannot be manipulated to satisfy balancing requirements.

8. Traverse main ducts to determine total system air quantities after all outlets have been set prior to final adjustment if the system does not meet design requirements. A sum of room CFM's is <u>not</u> acceptable.

9. If duct construction and/or installation prohibits proper traverse readings, provide coil measurements at main coils and/or fresh air intake traverse with units operating in 100% outside air mode (where applicable).

1.6 CONTRACTOR RESPONSIBILITIES

A. Provide Testing and Balancing agency one complete set of contract documents, change orders, and approved submittals in digital and hard copy formats.

B. Controls contractor shall provide required BAS hardware, software, personnel and assistance to Testing and Balancing agency as required to balance the systems. Controls Contractor shall also provide trending report to demonstrate that systems are complete.

C. Coordinate meetings and assistance from suppliers and contractors as required by Testing and Balancing agency.

D. Provide additional valves, dampers, sheaves and belts as required by Testing and Balancing agency.

E. Flag all manual volume dampers with fluorescent or other high-visibility tape.

F. Provide access to all dampers, valves, test ports, nameplates and other appurtenances as required by Testing and Balancing agency.

G. Installing contractor shall replace or repair insulation as required by Testing and Balancing agency.

H. Have the HVAC systems at complete operational readiness for Testing and Balancing to begin. As a minimum verify the following:

1. Airside:

a. All ductwork is complete with all terminals installed.

b. All volume, smoke and fire dampers are open and functional.

c. Clean filters are installed.

d. All fans are operating, free of vibration, and rotating in correct direction.

e. VFD start-up is complete and all safeties are verified.

f. System readiness checklists are completed and returned to Testing and Balancing agency.

2. Hydronics:

a. Piping is complete with all terminals installed.

b. Water treatment is complete.

c. Systems are flushed, filled and air purged.

d. Strainers are pulled and cleaned.

e. Control valves are functioning per the sequence of operation.

f. All shutoff and balance valves have been verified to be 100% open.

g. Pumps are started, and proper rotation is verified.

h. Pump gauge connections are installed directly at the pump inlet and outlet flange or in discharge and suction pipe prior to any valves or strainers.

i. VFD start-up is complete and all safeties have been verified.

j. System readiness checklists are completed and returned to Testing and Balancing agency.

I. Promptly correct deficiencies identified during Testing and Balancing.

J. Maintain a construction schedule that allows the Testing and Balancing agency to complete work prior to occupancy.

PART 2 - PRODUCTS

2.1 GENERAL REQUIREMENTS

A. Provide tools, ladders, recording meters, gauges, thermometers, velometers, anemometers, Pitot tubes, inclined gauge manometers, mangnehelic gauges, amprobes, veltmeters, psychrometers and tachometers required.

B. Instrumentation Calibration: Calibrate instruments at least every six (6) months or more frequently if required by instrument manufacturer.

1. Keep an updated record of instrument calibration that indicates date of calibration and the name of party performing instrument calibration.

PART 3 - EXECUTION

3.1 PREPARATION

A. Examine Bid Documents and submittals and notify Owner's Representative and Engineer of any questions regarding balancing.

1. Examine the Contract Documents to become familiar with Project requirements and to discover conditions in systems' designs that may preclude proper Testing and Balancing of systems and equipment.

2. Examine the approved submittals for HVAC systems and equipment.

3. Examine equipment performance data including fan and pump curves.

B. Prepare a Testing and Balancing Strategies and Procedures Plan that includes:

1. Equipment and systems to be tested.

2. Strategies and step-by-step procedures for balancing the systems.

3. Instrumentation to be used.

4. Sample forms with specific identification for all equipment.

C. Prepare system-readiness checklists, as described in the *AABC National Standards for Total System Balance*, for use by contractors in verifying system readiness for Testing and Balancing. These shall include, at a minimum:

1. Hydronics:

a. Piping is complete with all terminals installed.

b. Water treatment is complete.

c. Systems are flushed, filled and air purged.

d. Strainers are pulled and cleaned.

e. Control valves are functioning per the sequence of operation.

f. All shutoff and balance valves have been verified to be 100% open.

g. Pumps are started and proper rotation is verified.

h. Pump gauge connections are installed directly at the pump inlet and outlet flange or in discharge and suction pipe prior to any valves or strainers.

i. Permanent electrical power wiring and VFD start-up is complete and all safeties are verified.

j. Suitable access to balancing devices and equipment is provided.

D. Examine construction and notify Owner's Representative and Engineer of outstanding issues related to balancing, as part of "Examination Report" submittal.

1. Examine ceiling plenums and underfloor air plenums used for supply, return, or relief air to verify that they are properly separated from adjacent areas.

2. Examine HVAC equipment and verify that bearings are greased, belts are aligned and tight, clean permanent filters are installed, and controls are ready for operation.

3. Examine terminal units, such as variable-air-volume boxes, and verify that they are accessible and their controls are connected, configured by the controls contractor and functioning.

4. Examine strainers to verify that Mechanical Contractor has replaced startup screens with permanent screens and that all strainers have been cleaned.

5. Examine two-way valves for proper installation and function.

6. Examine three-way valves for proper installation for their intended function of diverting or mixing fluid flows.

7. Examine heat-transfer coils for correct piping connections and for clean and straight fins.

8. Examine air vents to verify that mechanical contractor has removed all air from all hydronic systems.

9. Examine systems for installed balancing devices, such as test ports, gage cocks, thermometer wells, flow-control devices, balancing valves and fittings, weld-o-lets, and manual volume dampers prior to pressure testing. Note the locations of devices that are not accessible for testing and balancing.

3.2 GENERAL PROCEDURES FOR TESTING AND BALANCING

A. Perform testing and balancing procedures on each system according to the procedures contained in AABC's "National Standards for Testing and Balancing Heating, Ventilating, and Air Conditioning Systems" or NEBB's "Procedural Standards for Testing, Adjusting, and Balancing of Environmental Systems" and this Section.

B. Cut insulation, ducts, pipes, and equipment cabinets for installation of test probes to the minimum extent necessary to allow adequate performance of procedures. After testing and balancing, close probe holes and patch insulation with new materials identical to those removed. Restore vapor barrier and finish according to insulation Specifications for this Project.

C. Mark equipment and balancing device settings with paint or other suitable, permanent identification material, including damper-control positions, valve position indicators, fan-speed-control levers, and similar controls and devices, to show final settings.

D. Take and report testing and balancing measurements in inch-pound (IP) units.

3.3 GENERAL PROCEDURES FOR HYDRONIC SYSTEMS

A. Prepare test reports for pumps, coils and heat exchangers. Obtain approved submittals and any manufacturer-recommended testing procedures. Cross check the summation of required coil and heat exchanger gpms with pump design flow rate.

B. Verify that hydronic systems are ready for testing and balancing:

1. Check liquid level in expansion tank and verify that tank is set to specified pressure for system fill and expansion.

2. Check that makeup water has adequate pressure to highest vent.

3. Check that control valves are in their proper positions.

4. Check that air has been purged from the system.

5. Locate start-stop and disconnect switches, electrical interlocks, and motor starters.

6. Verify that motor starters are equipped with properly sized thermal protection.

3.4 PROCEDURES FOR CONSTANT-FLOW HYDRONIC SYSTEMS

A. Adjust pumps to deliver total design gpm.

1. Measure total water flow.

a. Position valves for full flow through coils.

b. Measure flow by main flow meter, if installed.

c. If main flow meter is not installed, determine flow by pump total dynamic head (TDH) or exchanger pressure drop.

2. Measure pump TDH as follows:

a. Measure discharge pressure directly at the pump outlet flange or in discharge pipe prior to any valves or fittings.

b. Measure inlet pressure directly at the pump inlet flange or in suction pipe prior to any valves or strainers.

c. Convert pressure to head and correct for differences in gauge heights.

d. On single stage centrifugal pumps, verify pump impeller size by measuring the TDH with the discharge valve closed. Note the point on manufacturer's pump curve at zero flow and verify that the pump has the intended impeller size.

e. With all valves open, read pump TDH. Adjust pump discharge valve until design water flow is achieved.

3. Monitor motor performance during procedures and do not operate motor in an overloaded condition.

B. Adjust flow measuring devices installed in mains and branches to design water flows.

1. Measure flow in main and branch pipes.

2. Adjust main and branch balance valves for design flow.

3. Re-measure each main and branch after all have been adjusted.

C. Adjust flow measuring devices installed at terminals for each space to design water flows.

1. Measure flow at all terminals.

2. Adjust each terminal to design flow.

3. Re-measure each terminal after all have been adjusted.

4. Position control valves to bypass the coil and adjust the bypass valve to maintain design flow.

5. Perform temperature tests after all flows have been balanced.

D. For systems with pressure-independent valves at the terminals:

1. Measure differential pressure and verify that it is within manufacturer's specified range.

2. Perform temperature tests after all flows have been verified.

E. For systems without pressure-independent valves or flow measuring devices at the terminals:

1. Measure and balance coils by either coil pressure drop or temperature method.

2. If balanced by coil pressure drop, perform temperature tests after all flows have been verified.

F. Verify final system conditions as follows:

1. Re-measure and confirm that total water flow is within design.

2. Re-measure all final pump operating data, TDH, volts, amps, static profile.

3. Mark all final settings.

G. Verify that all memory stops have been set.

3.5 PROCEDURES FOR VARIABLE-FLOW HYDRONIC SYSTEMS

A. Adjust the variable-flow hydronic system as follows:

1. Verify that the differential pressure (DP) sensor is located per the Contract Documents.

2. Determine if there is diversity in the system.

B. For systems with no diversity:

1. Follow procedures outlined for constant-flow hydronic systems.

2. Prior to verifying final system conditions, determine the system DP setpoint.

3. If the pump discharge valve was used to set total system flow with VFD at 60 Hz, at completion open discharge valve 100% and allow VFD to control system DP setpoint. Record pump data under both conditions.

4. Mark all final settings and verify that all memory stops have been set.

C. For systems with diversity:

1. Determine diversity factor.

2. Simulate system diversity by closing required number of control valves, as approved by the design Engineer.

3. Follow procedures outlined for constant flow hydronic systems.

4. Open control valves that were shut. Close a sufficient number of control valves that were previously open to maintain diversity, and balance the terminals that were just opened.

5. Prior to verifying final system conditions, determine the system DP setpoint.

6. If the pump discharge valve was used to set total system flow with VFD at 60 Hz, at completion open discharge valve 100% and allow VFD to control system DP setpoint. Record pump data under both conditions.

7. Mark all final settings and verify that all memory stops have been set.

D. For systems with pressure-independent valves at the terminals:

1. Measure differential pressure and verify that it is within manufacturer's specified range.

2. Perform temperature tests after all flows have been verified.

3.6 TOLERANCES

A. Set HVAC system's air flow rates and water flow rates within the following tolerances:

1. Cooling-Water Flow Rate: Plus or minus 10 percent.

3.7 FINAL TEST & BALANCE REPORT

A. The report shall be a complete record of the HVAC system performance, including conditions of operation, items outstanding, and any deviations found during the Testing and Balancing process. The final report also provides a reference of actual operating conditions for the owner and/or operations personnel. All measurements and test results that appear in the reports must be made on site and dated by the technicians or Test and Balance Engineers.

B. The report must be organized by systems and shall include the following information as a minimum:

1. Title Page:

   a. AABC or NEBB Certified Company Name.
   b. Company Address.
   c. Company Telephone Number.
   d. Project Identification Number.
   e. Location.
   f. Project Architect.
   g. Project Engineer.
   h. Project Contractor.
   i. Project Number.
   j. Date of Report.
   k. Certification Statement.
   l. Name, Signature, and Certification Number.

2. Table of Contents.

3. National Performance Guaranty.

4. Report Summary:

   a. The summary shall include a list of items that do not meet design tolerances, with information that may be considered in resolving deficiencies.

5. Instrument List:

   a. Type
   b. Manufacturer
   c. Model
   d. Serial Number
   e. Calibration Date

C. Required Fluid Data: Test, adjust and record the following:

1. Heat Transfer Devices: Including, but not limited to air handlers, convectors, fin tube radiation sections, unit ventilators, fan coils, cabinet heaters, unit heaters, heat pumps, heat exchangers.

   a. GPM (coil and bypass)
   b. Entering water temperature
   c. Leaving water temperature
   d. Water pressure drop
   e. Complete nameplate data

D. One (1) copy of the final test and balance report shall be sent directly to the Engineer of Record. Provide five (5) additional copies to the Contractor.

END OF SECTION 23 05 93

This page intentionally left blank.

SECTION 23 07 10 - INSULATION

PART 1 - GENERAL

1.1 WORK INCLUDED

A. Provide labor, materials, equipment and services to perform operations required for the complete installation and related Work as required in Contract Documents.

1.2 SUBMITTAL

A. Submit product data, product description, manufacturer's installation instructions.

B. Submit schedule of types and thicknesses for each application, and location of materials.

1.3 RELATED WORK SPECIFIED ELSEWHERE

A. Section 232010 - Piping Systems and Accessories.

PART 2 - PRODUCTS

A. See Exhibits at the end of this section for where insulating materials shall be applied, thickness, jacketing and remarks.

B. Comply with 2020 Energy Conservation Code of New York State.

C. Insulation, jackets, adhesive, and coatings shall comply with the following:

1. Products shall not contain asbestos, lead, mercury, or mercury compounds.

2. Insulation, including jackets, finishes and adhesives on the exterior surfaces of ducts, pipes, and equipment, shall have a flame spread rating of 25 or less and a smoke developed rating of 50 or less, when tested in accordance with ASTM E84 or UL 723.

a. Plenums: Insulation materials shall be noncombustible or listed and labeled per ASTM E84 or UL 723.

b. Treatment of jackets or facing for flame and smoke safety must be permanent. Water-soluble treatments are not permitted.

3. All adhesives, coatings and sealants used for insulation in the interior of the building shall comply with the maximum Volatile Organic Compound (VOC) limits as called for in the current version of U.S. Green Building Council LEED Credits EQ 4.1 and EQ 4.2.

4. Provide materials which are the standard products of manufacturers regularly engaged in the manufacture of such products and that essentially duplicate items that have been in satisfactory use for at least two (2) years prior to bid opening.

Provide insulation systems in accordance with the approved MICA or NAIMA Insulation Standards.

5. Insulation shall be clearly marked with manufacturer's name, identification of installed thermal resistance (R) value, out-of-package R value, flame spread and smoke developed indexes in accordance with Energy Code requirements.

6. Products that come into contact with stainless steel shall have a leachable chloride content of less than 50 ppm when tested in accordance with ASTM C 871.

7. Insulation materials for use on austenitic stainless steel shall be qualified as acceptable in accordance with ASTM C 795.

2.2 ACCEPTABLE MANUFACTURERS

A. Fiberglass: Johns Manville, Knauf/Manson, Owen-Corning, or approved equal.

B. Jacketing: Johns Manville (PVC), or approved equal.

C. Adhesives, Coatings, Mastics, Sealants: Childers, Foster, or approved equal.

2.3 RIGID FIBERGLASS

A. Pre-formed glass fibers bonded with a thermosetting resin.

B. Pipe:

1. Product meeting ASTM C 547, ASTM C 585, and ASTM C 795; rigid, molded, noncombustible.

2. 'K' Value: 0.23 BTU-in/ft^2 hr. °F at 75°F mean temperature.

3. Maximum Service Temperature: 1000°F.

4. Vapor Retarder Jacket: Factory applied ASJ/SSL conforming to ASTM C 1136 Type I, secured with self-sealing longitudinal laps and butt strips.

5. Density: As required to meet specified R-value in Exhibit, unless otherwise noted.

6. Field applied PVC Fitting Covers with Flexible Fiberglass Insulation: Proto Corporation 25/50 or Indoor/Outdoor, UV resistant fittings, jacketing and accessories, white or colored. Fitting cover system consists of pre-molded, high-impact PVC materials with blanket type fiberglass wrap inserts. Blanket fiberglass wrap inserts shall have a thermal conductivity ('K') of 0.26 at 75°F mean temperature. Closures to be stainless steel tacks, matching PVC tape, or PVC adhesive per manufacturer's recommendations.

2.4 FIELD APPLIED JACKETS

A. PVC: High-impact UV resistant PVC; roll stock ready for shop or field cutting and forming.

1. Thickness: 30 mil.

2. PVC Jacket Color: White.

2.5 ADHESIVES, COATINGS, MASTICS, SEALANTS

A. Provide per manufacturer product requirements for associated system and application/installation location.

PART 3 - EXECUTION

3.1 GENERAL REQUIREMENTS

A. All materials shall be installed by skilled labor regularly engaged in this type of work and installed in strict accordance with manufacturer's recommendations, building codes, and industry standards. Install insulation materials, forms, vapor barriers or retarders, jackets, and of thicknesses required for each item of pipe system per manufacturer requirements. Apply adhesives, mastics, and sealants at manufacturer's recommended coverage rate and wet and dry film thicknesses.

B. Locate insulation and cover seams in the least visible location. All surface finishes shall be extended in such a manner as to protect all raw edges, ends and surfaces of insulation. No glass fibers shall be exposed to the air. Install insulation with longitudinal seams at top and bottom of horizontal runs. Install multiple layers of insulation with longitudinal and end seams staggered and with the least number of joints possible.

C. All pipe insulation shall be continuous through hangers.

D. Provide thermal insulation on clean, dry surfaces and after piping (as applicable) have been tested. Do not cover pipe joints with insulation until required tests are completed.

E. All cold surfaces that may "sweat" must be insulated. Vapor barrier must be maintained; insulation shall be applied with a continuous, unbroken moisture and vapor seal. All hangers, supports, anchors, or other projections that are secured to cold surfaces shall be insulated and vapor sealed to prevent condensation.

F. Provide protective insulation as required to prevent personnel injury: Piping from zero to seven feet above all floors and access platforms including hot (above 140°F) piping and any other related hot surface.

G. If any insulation material has become wet because of transit or job site exposure to moisture or water, the contractor shall not install such material, and shall remove it from the job site.

H. Do not weld brackets, clips, or other attachment devices to piping, fittings, and specialties.

I. Finish installation with systems at operating conditions. Repair joint separations and cracking due to thermal movement. Repair damaged insulation facings by applying same facing material over damaged areas. Extend patches at least 4 inches **[OR insert value]** beyond damaged areas. Adhere, staple, and seal patches in similar fashion to butt joints.

3.2 PENETRATIONS

A. Interior Floor, Wall and Partition Penetrations (That Are Not Fire Rated): Install insulation continuously through walls and partitions.

B. Fire-Rated Floor, Wall and Partition Penetrations: Install insulation continuously through penetrations of fire-rated walls and partitions.

1. Comply with requirements in Section 078413 "Penetration Firestopping" for firestopping and fire-resistive joint sealers.

3.3 PIPE INSULATION

A. All pipes shall be individually insulated. Cover valves, fittings and similar items in each piping system with insulation as applied to adjoining pipe run. Extra care must be taken on piping appurtenances to insure a tight fit to the piping system.

B. Piping insulation is allowed to be reduced in thickness only when a specific UL assembly detail for piping passing thru a rated wall indicates a maximum insulation thickness that is less than this specification section calls for. In this case reduce the insulation thickness just for the rated wall penetration. The reduction of insulation thickness shall be limited to the length of the penetration only.

3.4 EXISTING INSULATION

A. Patch existing insulation damaged during the course of the work.

EXHIBIT "I" - PIPE INSULATION MATERIALS

SERVICE	INSULATION MATERIAL	THICKNESS	REMARKS
Process chilled water piping	Not insulated	Not insulated	Includes CESR85, Optics Process Water, Experimental Process Water
Chilled water, glycol/chilled water (temperature greater than 40°F)	Rigid Fiberglass	1-1/2 in. and Larger: 1 in. 1-1/4 in. and Smaller: 1/2 in.	

NOTES FOR EXHIBIT "I":

NOTE 1: Use cork insulation tape equal to K-flex Cork Tape for cold service piping where installed inside equipment valve compartment (fan coil, etc.).

END OF SECTION 23 07 10

This page intentionally left blank.

SECTION 23 09 23 - BUILDING AUTOMATION CONTROL SYSTEM

PART 1 - GENERAL

1.1 INTRODUCTION

A. The Building Automation Control System (BACS) is configured as a network with control functions at multiple levels, and with multiple points of operator control and supervision. The BACS includes centralized head-end computers, the Energy Management and Controls System (EMCS) workstations, data transmission systems, field panels and controllers, necessary interfacing controls, sensors and actuators. The controllers contain microprocessors and other supporting electronics that perform local control functions and execute application programs without requiring communications with the centralized head-end computers or workstations.

1.2 DESCRIPTION

A. Provide labor, materials, equipment and services as required for the complete installation designed in Contract Drawings. Provide a complete Direct Digital Control System, to perform the functions described in this Section. Provide wiring and conduit required to connect devices furnished as a part of, or accessory to, this automatic control system. Control wiring is defined as wiring up to and including 120 volts. Install wiring in accordance with requirements of "Electrical Wiring" in Section 15A019, and the National Electrical Code. Provide all required devices for proper system operation, including special electrical switches, transformers, relays, pushbutton stations, etc.

1.3 QUALITY ASSURANCE

A. The complete automatic temperature control system shall be comprised of electronic control devices with a microprocessor based Direct Digital Control System. All work shall be installed only by skilled mechanics.

B. The Temperature Control Trade/Supplier shall have a minimum of five years experience in systems of similar size, type and complexity installed within a 100 mile radius.

C. The Temperature Control Trade/Supplier shall have a local service department (within a 50 mile radius) and have available a minimum of three factory trained technicians within a 24 hour period.

D. All components shall be fully tested and documented to operate as a complete system.

E. Supplier must guarantee that all replacement parts will be carried in stock for a period of 10 years minimum from the data that the system is commissioned.

1.4 SUBMITTALS

A. Submit for review, a brochure containing the following:

1. Detailed piping and wiring control diagrams and systems description for each system under control.

2. Detailed layout and nameplate list for component control panels and DDC panels.

3. Submit a valve and damper scheduled showing size, pressure drop configuration, capacity, and locations. Provide apparatus Bulletins and data sheets for all control system components.

4. A complete listing of input and output points, control loops and/or routines, including time of day functions, and facilities management system functions for each controlled system. This listing shall include point logical names, identifiers, and alarmable ranges.

5. Submit a space categorization schedule for the steam and chilled water load sheds for each system under control.

6. Provide as part of a separate submittal a hard copy of all graphics showing system components, sensor locations, setpoints and fixed/variable data. Engineer shall review and approve graphic format prior to final acceptance of system.

1.5 WORK INCIDENTAL TO TEMPERATURE CONTROL TRADE

A. Furnish the following materials:

1. For piping work:

a. Control valves in piping.

b. Immersion sensing wells in piping systems.

c. Valved pressure taps.

2. For sheet metal work:

a. All automatic dampers, assemble multiple section dampers with required interconnecting linkages and extend required number of shafts through duct for external mounting of damper and motors.

b. Provide access doors to other means of access through ducts or ceilings and walls for service and adjustment of controllers, valves, and dampers.

B. Furnish written details, instructions and supervision for the above trades to Ensure proper installation size, and location of any equipment furnished for installation by others.

C. Electrical trade to provide 120 volt dedicated emergency power with surge protection to all DDC panels and operator workstations.

D. Provide 120 volt dedicated emergency power and control transformers at all microprocessor based VAV terminal unit controllers and laboratory air valve controllers. As an option, provide control transformers sized to serve multiple VAV terminal unit controllers and laboratory air valve controllers. Provide a junction box or boxes to obtain power, on a per floor basis. See electrical plans for locations.

1.6 CONTROL SYSTEM GUARANTEES

A. Guarantee the new control system to be free from defects in material and workmanship, for a period of one year after final acceptance. Guarantee System to:

1. Maintain temperatures within 1°F above and below setting.

2. Humidity devices shall maintain relative humidity conditions within 3% of span 0-100% RH.

B. Provide one year maintenance service of control components, to start concurrently with the guarantee specified above. Such service shall include software updates and 24-hour, 7-day emergency and seasonal inspection and adjustment of operating controls and replacement of parts or instruments found deficient and defective during this period.

C. The Contractor will provide monitoring of the DDC system as soon as the system is operating and then for a minimum of one (1) year (24 hours/day, 7 days/week) after the acceptance date. A monthly report will be sent to the Owner with a description of general system status and any alarms or off-normal conditions.

D. The Contractor will guarantee future availability of continuous, 24-hour, 7-day a week service for the systems through available maintenance contracts.

1.7 SYSTEM ADJUSTMENT AND CALIBRATION

A. When the Work has been completed, completely adjust and calibrate the control system. Review the operation of each system input and output, control loops and/or software routings, timing functions, operator entered constants and facilities management functions and observe that they perform their intended functions. Provide a complete values and points log, printed every hour, for one week to demonstrate control functions and programming. Provide one point log for summer operation and one winter. Points to be trended shall be selected by the engineer. When above procedure has been completed and the control system is operating satisfactorily, submit a letter with one copy of completed values and points log to the Owner's Representative advising them that the control system is 100% complete and operates in accordance with the Contract Documents.

B. After review and approval of points log by the Engineer, the control system trade shall schedule a technician on site for field review of system components, operation and graphics as part of final system appearance.

1.8 APPLICABLE STANDARDS

A. The following standards shall govern the design and selection of equipment supplied to fulfill the requirements of this section:

1. ANSI/ASHRAE Standard 135-2012: *BACnet®. - A Data Communication Protocol for Building Automation and Control Networks*, as amended, and hereinafter referred to as "BACnet". American Society of Heating, Refrigerating and Air-Conditioning Engineers, Inc. 2012.

2. ATA/ANSI 878.1 (1992), ARCNET Local Area Network.

3. ISO/IEC 8802-3 (1993), Information processing systems - Local area networks - Part 3: Carrier sense multiple access with collision detection (CSMA/CD) access method and physical layer specifications. .

1.9 PROCEDURES

A. For connection of devices and reconfiguration of existing devices on the Cornell University Building Automation and Control System Network:

1. Contractor making changes to existing devices or installing new devices on the Cornell University Building Automation and Control System Network shall contact the Energy Management and Control System (EMCS) Operation at 607-255-5777 at least one (1) business day in advance of the anticipated work to initiate a service request with the Cornell Control Shop. The requestor shall provide the following information:

a. Desired time to ,start work and the expected duration

b. The IP address of the device to be installed or configured

c. The physical location of the device including facility and room number.

d. Cell phone contact information for the installer.

2. Work will be permitted from 7:00 AM — 1:00 PM on business days Monday through Thursday. The one (1) day notice requirement and hours restrictions will be waived if the work is deemed an emergency. Personnel shall notify EMCS when the work is complete. Personnel are expected to be able to respond on site if contacted by EMCS to correct any anomalies related to the work for a period of up to four (4) hours after work is complete or if released by the FMCS, whichever is sooner.

1.10 BACNET/IP CHECKOUT

A. Prior to connection to the campus backbone network, it must be demonstrated to Cornell personnel that these criteria have been met:

1. The LP address, subnet mask and IP gateway address of the device to be connected must be shown to be correct for the network connection about to made.

2. The device's Device Instance Number (DIN) must be shown to conform to Cornell standards.

3. In the case of devices that route to subordinate BACnet MS/TP or ARCNET networks, the network numbering must be shown to conform to Cornell numbering standards.

4. The BACnet alarm Recipient List must contain the DIN (or BACnet Address, i.e., (BACnet Network Number, MAC Address)) of both the appropriate vendor server (ALC) and the EMCS alarm server (currently Jarlsberg, DIN 510).

5. For each device containing network variables, a list of network variables must be provided showing that each references a valid network-accessible point.

6. For each device containing points that are to issue Unconfirmed COV Notifications, a list of the points and their respective Change of Value (COY) increments must be provided to prove that the device will not generate COV storms.

7. BACnet Broadcast Management Device (BBMD) capability must be shown to be disabled unless explicitly authorized by Cornell, i.e., the device's Broadcast Distribution Table (BDT) must be shown to be empty or non-existent.

PART 2 - PRODUCTS

2.1 GENERAL

A. This section defines requirements for the sensors, controllers, computers, and generally the components that make up the system and the means and methods by which they are installed.

B. Software and Hardware Updates - At the end of the first six months, and during the second six months, the Contractor shall update the equipment and any controllers, servers, workstations and HMI Web servers with the latest modifications and improvements in software, firmware, and hardware that the manufacturer may have incorporated in the furnished equipment.

C. Devices (i.e., sensors, meters, instruments, etc.) that are resettable must be installed in a readily accessible location (e.g., the device must be accessible at floor level without the use of a ladder). No device shall require shutting down a building system for calibration.

D. Devices that are installed in an exposed location (i.e., not mounted within a cabinet) must be suitable for such installations (e.g., do not install a device that is intended to be installed in a cabinet in an exposed location).

2.2 CONTROLLERS

A. Overview

1. The control system shall consist of an inter-network of controllers.

B. Controller Installation Requirements

1. Building- and system-level controllers shall be capable of operating independently, in stand-alone fashion, with no communication to other devices on the network while performing their monitoring and control routines using programs and operating parameters stored in the controllers' memory.

2. All points and functions that make up a functional system (typically that shown on one control schematic) shall be included in one controller to qualify for this stand-alone functionality. Where control sequences depend on global variables such as OAT, the controller shall have the capability of either using the last value or a default value. Design professional shall specifically indicate point groupings for stand-alone capability. Examples of required functional point groupings are:

a. All points and functions required to control an air handler with all directly associated supply, return, and exhaust fans. This excludes the terminals that may be associated with that air handler. Values that may be received across the network include:

1) Humidity;
2) Emergency power source indication;
3) Terminal based reset parameters;
4) Smoke modes.

b. All points associated with the supply side of a hydronic system: pumps, flow meters, temperature and pressure sensors, proof indications, valves etc. This excludes the terminals on that hydronic system. Values that may be received across the network include:

1) OAT and humidity;
2) Emergency power source indication;
3) Terminal based reset parameters.

c. All points and functions required to control one terminal system including dampers, valves, flow meters, temperature and humidity sensors, etc. This does not include the scheduling period or any OA that may be necessary for control.

3. Controller software must be capable of detecting hardware and software failures and forcing all outputs to a predetermined state, consistent with the failure mode requirements defined on the drawings. In this state it shall issue an alarm.

4. Controllers must include sufficient memory for all required operation and all required trending, when trending is buffered in the controller. Where control system operation is hindered by the shortage of memory, contractor shall, at no cost to the Owner, either upgrade the memory or provide multiple controllers. The mix of points for multiple controllers shall not violate the stand-alone requirements. Volatile memory is required to be backed up in the event of power loss. Software stored in non-volatile memory will not have to be downloaded from the central server after an interruption of power occurs.

5. Controllers used for time-scheduled operations must be equipped with a battery backed internal real-time clock function to provide a time base for implementing time-dependent programs. Provision shall be made for the routine updating of the controllers' clocks via a time master.

6. Resumption of power after an outage shall cause the controllers to automatically restart and establish communications as needed by their applications. Controller shutdown based on a self-diagnosed failure in the power supply, hardware, or software must set each piece of controlled equipment to a predetermined failure mode.

7. Controllers shall be powered from the most reliable source that powers any of the systems it serves. In the situation where a controller will be required to continuously collect data to be transmitted to a workstation, or where it monitors critical recovery information such as the presence of emergency power, it may be necessary to provide a UPS for the controller as well as any critical sensors. Where panels are provided with a different power source as the equipment (such as when the panel is on a UPS), the panel shall be provided with a means of monitoring the power source to the controlled equipment. This can be a dedicated power monitor or a value coming from transfer switch contacts.

2.3 SENSORS

A. General

1. The following indicates basic requirements for the I/O devices.

2. All sensors and transmitters shall be located in accessible locations that do not require system shutdown for calibration. Locate all remote transmitters in control panels 5' above finished floor.

B. Temperature Sensors

1. Sensor Resolution - When matched with A/D converter of the controller, sensor range shall provide a resolution of no less than 0.4°F (unless noted otherwise).

2. Room Temperature Sensor - These shall be an element contained within a ventilated cover, suitable for wall mounting. Provide an insulated base.

    a. Sensing element – RTD or thermistor +/- 0.5°F accuracy at calibration point;

    b. Provide set-point adjustment and appropriate cabling where indicated for zones. Public spaces shall not have setpoint adjustment. The setpoint adjustment shall be a warmer/cooler indication that shall be scalable via the BACS system;

    c. Provide an occupancy override button on the room sensor enclosure and appropriate cabling where indicated (this shall include all office spaces). This shall be a momentary contact closure;

    d. Provide the sensor with an alphanumeric display;

    e. Provide sensor with communications jack and appropriate cabling for connection to the BACS.

    f. Temperature sensor shall be mounted at 46" A.F.F. to center line of device. Coordinate mounting height with all devices on a common wall. All devices shall be installed in alignment.

3. Single Point Duct Temperature Sensor - These shall consist of a sensing element, junction box for wiring connections, and a gasket to prevent air leakage or vibration noise. The temperature range as required for resolution is indicated above. The sensor probe shall be stainless steel.

    a. Sensing element - RTD or thermistor +/- 0.5°F accuracy at calibration point.

4. Averaging Duct Temperature Sensor - These shall consist of an averaging element, junction box for wiring connections and gasket to prevent air leakage. Provide sensor lengths and quantities to result in one foot of sensing element for each, two square feet of coil/duct face area. Temperature range shall be as required for resolution as indicated above.

    a. Sensing element - RTD or thermistor +/- 0.5°F accuracy at calibration point.

5. Liquid Immersion Temperature Sensor

    a. These shall include brass or stainless steel thermowell, sensor and connection head for wiring connections;

    b. Sensing element - RTD, thermistor, or integrated circuit, +/- 0.4°F accuracy at calibration point. The temperature range shall be as required for resolution of 0.3°F;

c. Refer to Cornell's metering specification for temperature sensors that are used for metering.

6. OA Sensors

a. These shall consist of a sensor, sun shield, utility box, and watertight gasket to prevent water seepage. The temperature range shall be as required for the resolution indicated above;

b. Sensing element - RTD, thermistor, or integrated circuit, +/- 0.4°F accuracy at calibration point;

c. On major/critical systems, one shall be provided for each;

d. Sensors shall be located on a north wall of the building and installed with stand-offs. On 100% OA systems and lab buildings, locate sensor in outside air plenum.

e. Provide one sensor per mechanical room or building-level controller.

C. Pressure Sensors - The pressure transducers will be either diaphragm or strain gauge types:

1. Air Differential Pressure Transmitters:

a. Applications: Duct static pressure, air flow VP, filter DP, Fan DP, etc.;

b. Provide the smallest range feasible for the application. Provide zero and span adjustments;

c. Accuracy: Plus or minus 1% of full scale for static and 0.25% for air velocity;

d. Acceptable Manufacturers (Airflow): Air Monitor, Paragon;

e. Acceptable Manufacturers (Filter DP): Dwyer;

f. Acceptable Manufacturers (General and Static Pressure): Mamac, Setra.

2. Liquid Differential Pressure Transmitters:

a. Pressure transmitters shall gauge pressure in the form of a linear 4 to 20 mA or 0-10 VDC signal. Sensor shall be installed with a valve manifold and pressure/temperature test ports in lieu of pressure gauges. DP transmitter shall be rated for 150 PSIG static pressure;

b. Span shall be no greater than 2 times the working differential pressure of the system to allow the highest possible resolution;

c. Pressure transmitters shall meet the following performance criteria:

1) External span and zero adjustments;

2) 1% accuracy over the entire span;

3) Wetted parts: Stainless steel with a silicone fluid-filled diaphragm;

4) Repeatability: Plus or minus 0.5% at maximum span.

d. Install all transmitters with a three-valve manifold for venting, draining, and calibration;

e. Acceptable Manufacturers (Gauge and Differential Pressure): Mamac, Setra.

D. Flow Sensors

1. General - Flow sensors shall be carefully placed to ensure flow profiles that are required for accurate flow sensing. Designs shall specifically indicate the location of the sensors and indicate the length of unobstructed duct or pipe upstream and downstream from the sensor.

2. Water:

a. Water flow sensors shall meet the requirements necessary for use for test and balance duty as defined in the DCS specifications.

b. Water flow sensors for monitoring only shall follow CHW standards defined in the DCS specifications.

3. Air Flow (For Laboratory VAV and AHU/Duct Flow Stations):

a. Use a pitot-tube averaging grid of a material compatible with the environment. Fan inlet grids shall be used where possible to measure fan flow

b. Accuracy: +/- 0.25%

c. Stability: +/- 0.5% of full scale per year or less

d. Auto-zero capability by venting ports to atmosphere

e. All fan inlet style flow elements shall be provided by the fan vendor and shall not block or affect fan efficiency

f. Acceptable Manufacturers: Air Monitor, Paragon

g. Field calibrate to +/- 5% of field-measured airflow.

4. Air Flow (For Duct Airflow Monitoring):

a. Use a pitot-tube averaging grid of a material compatible with the environment

b. Accuracy: +/- 0.25%

c. Stability: +/- 0.5% of full scale per year or less

d. Field calibrate to +/- 5.0% of field-measured airflow.

E. Current Switches (CS)

1. For Constant Speed Motors:

a. CS shall be provided for status indication of constant speed motors

b. Switch shall indicate loss of status when current falls below an adjustable trip point

c. CS shall include LED indication of status

d. Acceptable Manufacturer: Veris Industries (H708/ H908 series).

2. For Variable Speed Motors:

a. Typically, status indication that indicates VSD or bypass operation shall be derived from contacts on the VSD. The VSD must be specified to include this option.

b. Otherwise, a current switch shall be provided for status indication. The switch shall be microprocessor based and suitable for use on a VSD.

c. Self-adjusting trip setpoint.

d. Factory programmed to detect belt loss undercurrent conditions.

e. CS shall include LED indication of status.

f. Acceptable Manufacturer: Hawkeye.

F. Combination Temperature/CO2 Sensors/Humidity:

1. Wall mount: Combination transmitter shall be mounted at 46 in. A.F.F. to center line of device. Coordinate mounting height with all devices on a common wall. All devices shall be installed in alignment.

2. Power requirements: 12 VDC @ 15 mA to 190 mA.

3. Temperature sensing element: +/- 0.5 deg. F accuracy at calibration point.

4. CO2 sensing equipment: +/- 30 PPM or +/- 3% accuracy at 400 to 1,250 PPM.

5. Humidity sensing elements humidity from 10% to 90% with +/- 1.8% accuracy. Element shall have less than 1% drift per year.

6. Acceptable Manufacturer: Automated Logic ZSP-HC-ALC or design equal.

G. Combination Temperature/Humidity:

1. Wall mount: Combination transmitter shall be mounted at 46 in. A.F.F. to center line of device. Coordinate mounting height with all devices on a common wall. All devices shall be installed in alignment.

2. Power requirements: 12 VDC @ 15 mA to 190 mA.

3. Temperature sensing element: +/- 0.5 deg. F accuracy at calibration point.

4. Humidity sensing elements humidity from 10% to 90% with +/- 1.8% accuracy. Element shall have less than 1% drift per year.

5. Acceptable Manufacturer: Automated Logic ZSP-H-ALC or design equal.

H. Dewpoint Sensors

1. Units shall be suitable for duct, wall (room) or outdoor mounting. Units shall be two-wire transmitters utilizing bulk polymer resistance change or thin film capacitance change humidity sensors. Units shall produce linear continuous output of 4-20 mA for dewpoint temperature (°F). Sensors shall have the following minimum performance and application criteria:

a. Accuracy: +/- 1.8°F;

b. Sensor Operating Range: As required by the application;

c. Long Term Stability: Less than 1% drift per year;

d. Digital display.

2. Acceptable Manufacturers:

a. Vaisala only.

2.4 CONTROL VALVES

A. General

1. All valves shall be provided and sized by the control trade.

2. Valves shall be applicable for the rated pressure and temperature service. Close off pressures must be determined in concert with the actuators and valves shall be provided to close off against extreme anticipated conditions.

3. Modulating valves shall be carefully selected to control in a smooth and stable fashion across the range of anticipated conditions. "Split ranging" of heating and cooling valves controlled by the BACS is not acceptable. A separate output from the BACS shall be provided for all control valves. General guidelines are indicated below. When the selection criteria indicated below are not met, flow characteristic analyses shall be submitted to demonstrate reasonable correlation between stroke and flow. Valves with a CV greater than 30 may be pneumatically actuated, but should only be used if a cost benefit analysis shows they are preferred. Actuator positioning requirements are as follows for each type, if used:

   a. Electric Input: 4-20 mA or 0-10 VDC;

   b. Electrically piloted valves shall have a pneumatic actuator with positioner;

   c. Pilot positioners shall be required as necessary to keep the valve closed under the maximum differential pressure.

4. The BACS output to modulating valves shall be analog. In addition:

   a. Terminal reheat valves shall be proportional

   b. Fan coils and similar terminal device valves shall be proportional

   c. Radiation valves shall be two-position or proportional

   d. Unit heaters shall be two-position or proportional.

B. Water

1. General - Modulating water valves will generally be ball valves with an equal percentage characteristic. Modulating water valves shall typically be sized for 50-100% of the typical controlled circuit pressure drop at 70% wide open CV. The minimum design CV shall be no less than 1.9.

2. Chilled Water Building Mixing Valve (two-way)

   a. Rotary-segmented ball ported industrial control valve

b. Body: Flanged carbon steel

c. Seat: Composition or stainless/Teflon

d. ANSI leakage class: IV

e. Trim: 316 Stainless

f. Actuator: Electric

g. Typically CV shall be selected to give a 2 PSIG drop @ maximum building flow with the valve at the 90% open CV. Verify the necessary pressure drop with the Department of Utilities and Energy Management (Utilities). For buildings located at extremities, check with Utilities since requirements may not be typical.

h. Valve shall seat against 40 PSI differential pressure (typical values; check with Cornell Utilities for location-specific values).

i. Flow Characteristic Equal percentage or modified equal.

j. Valve shall be normally open.

k. Acceptable Make: Fisher, Neles, Valve Solutions.

3. Coil Valves

a. Water and glycol control valves shall be rated to remain closed (zero leakage) against 120% of the full shutoff head of the pumps, when the control signal is set to "fully closed".

b. Type: Valves shall all be two-way, V-port valve with characterizing disc, 1/4 turn.

c. Packing: EPDM O-rings, lubricated.

d. Stem: Stainless steel

e. Seat: Fiberglass reinforced Teflon

f. Actuator: Electric, one motor only

g. Flow characteristics: Equal percentage

h. Ball and Stem shall be stainless steel

i. Fail positions shall generally be as follows, contact Cornell for special circumstances requiring deviation from these requirements:

1) Terminal hot water radiation: fail last

2) Duct mounted re-heat coils serving animal rooms: normally closed spring return.

3) Duct mounted re-heat coils serving laboratories: fail last

4) Duct mounted re-heat coils serving offices: fail last

5) Fan Coil Unit cooling coils: normally closed spring return

6) Pre-heat coils in Air Handling Units: normally open spring return

7) Chilled water coils in Air Handling Units: normally closed spring return

8) Chilled Beam terminal cooling: normally closed spring return

j. Acceptable Manufacturers: Belimo, Valve Solutions.

C. Steam

1. Steam control valves shall be rated for the highest system pressure and temperature and shall not lift when subjected to that pressure with the control system set to "fully closed."

2. All steam control valves shall be pneumatically or electrically actuated and have a flanged or screw body with a rating of 400°F or higher, as appropriate. Trim shall be rated for 400°F.

3. Use high performance segmented V-ball control valves for all steam control applications. Since Cornell does not require 1/3-2/3 sizing, these valves are extremely cost-effective; the energy savings associated with the reduced pass-through leakage often pays for the higher cost premium. In addition, these valves require less packing maintenance and use much less vertical space than comparable valves. Steam valves shall have the following characteristics:

a. Leakage Class: ANSI Class IV, minimum

b. Flow Characteristic: Equal Percentage

c. Rangeability: 300:1 turndown

4. On steam control valves with a normal differential pressure of 15 PSIG or greater, stainless steel noise reducing trim shall be used.

5. Acceptable Manufacturers:

   a. Fisher

   b. Neles

   c. Valve Solutions, Inc.

6. Fail positions shall generally be as follows:

   a. Heat Exchangers/Converters: Normally closed spring return (to protect for high temperature).

2.5 CONTROL DAMPERS

A. Dampers shall be applicable for the rated pressure and velocity service. Damper structural rating shall exceed extreme anticipated conditions like fan deadhead.

B. Modulating dampers shall be carefully selected to control in a smooth and stable fashion across the range of anticipated conditions. Except where size dictates a single blade, dampers shall always be opposed blade. When a large section of damper is to be connected to a single jackshaft, size limitations shall be followed. This will prevent excessive damper area or, more importantly, length from being connected to a single jackshaft. Typically, the manufacturer's recommendation shall be sufficient for specifying a limit to the size of a damper bank that may have field fabricated jackshaft connections.

C. Whenever possible, dampers shall have external crankshafts to allow the connection of the damper actuator outside of the air stream. This will allow for easier access to the actuators for maintenance.

D. OA control dampers shall be low leakage dampers with damper seals.

E. Output to modulating control dampers shall be analog.

F. Design make: Ruskin.

G. Acceptable Manufacturers: Greenheck, Ruskin, and Nailor.

2.6 DAMPER ACTUATORS

A. General: Size actuators and linkages to operate their appropriate dampers or valves with sufficient reserve torque or force to provide smooth modulating action or two-position action and adequate close off rating as required.

B. For AHU/ duct mounted dampers:

   1. Actuators shall be electronic.

2. Standard Electronic Actuators: Shall be designed for a minimum of 60,000 full cycles at full torque and be UL 873 listed. Provide stroke indicator. Actuators shall have a positive positioning circuit and selectable inputs. Full stroke shall be within 90 seconds. Where fail positions are required, provide spring return on the actuator with adequate close off force.

3. Acceptable Manufacturers: Belimo.

C. For terminal unit dampers:

1. Standard Electronic Actuators: Shall be designed for a minimum of 60,000 full cycles at full torque. Provide stroke indicator. Output to modulating damper actuators may be analog or floating.

2. Fast Acting Electronic Actuators: Provide fast acting electronic actuators for VAV terminals on fume hood and associated tracking zone dampers. These actuators shall move full stroke in less than one second. Output to modulating damper actuators shall be analog.

3. Venturi Style Air Valves: Provide a factory mounted and calibrated electronic positioner and fast acting (less than one second full stroke) electric actuator with position feedback.

2.7 CONTROL PANELS

A. Enclosures

1. All BACS panels shall be metal enclosures containing the controller, I/O modules, power supplies, termination strips, battery (if not integral to the controller or I/O module) and a spare AC outlet.

2. All penetrations of the BACS or outboard gear panels in mechanical rooms shall be from the bottom of the enclosure with wireway and conduit stubs from the wireway up to the panel.

3. All transformers and power supplies shall be mounted outside of the central panel.

4. Enclosures located in mechanical rooms shall be NEMA 4.

5. Enclosures located in labs and other relatively dust free and dry spaces may be NEMA 1.

6. Enclosures shall be mounted on walls or free-standing supports.

7. Provide enclosures with key lockable doors.

B. Power Supplies

1. The Contractor shall provide a regulated, protected power supply as required with the ability to produce at least 33% more current than required by the transmitters and controls being installed. Output regulation shall be less than 0.5mV. There shall be no overshoot on turn on or off. Operating temperature shall be -20 to +70ºC

2. The BACS Trade shall certify in writing at the time of shop drawing submittal that the DDC equipment provided will not cause, as a result of its operation, either directly or indirectly, electrical interference to be induced into the building's electrical power systems.

3. Class II transformers shall be used.

C. Panel Fabrication

1. The Contractor shall size the panel such that no more than 80% of the surface of the enclosure back plate is used.

2. Plastic wire way (e.g., Panduit) shall be used to organize all wiring in the panel.

3. Sufficient wire way shall be provided in the panel such that it is filled no more than 80% capacity.

4. Panel layout and construction shall be neat and professional.

5. All controllers, wiring, and components in the panels shall be labeled. All labeling shall match the reference numbers on the cabinet drawings that shall be provided for each panel.

6. Label the power source and circuit number for each panel.

2.8 CONTROL WIRING

A. General:

1. All control wiring in mechanical equipment rooms or other spaces in which it is readily accessible shall be installed in electrical metal tubing (EMT) with compression or set screw couplings.

2. All control wiring run in interstitial spaces shall either be run in EMT or a cable tray or raceway.

3. All control wiring installed outdoors or any area subject to moisture shall be installed per code.

4. All control wiring installed in vertical chases shall be installed in EMT.

5. All control wiring above non-accessible ceilings shall be installed in EMT.

6. All control wiring installed above accessible ceiling spaces which are not laboratories or AHU's shall be plenum type, not installed in conduit, but neatly run with generous use of rings or ties.

7. Wire shall be un-spliced from the controller to the sensor or device.

8. Control wiring shall not be routed in the same raceway as power wiring.

9. Unless specifically required otherwise by the BACS equipment manufacturer, all I/O wiring shall be twisted shielded pair cable. For sensors, the shield shall be grounded at the panel and taped back at the sensor. For communications, the above control wiring requirements and the BACS equipment manufacturer's installation guidelines and recommendations shall apply.

10. Control wiring shall be color coded and labeled at all points of termination.

11. Remove and properly dispose of all abandoned control wiring, conduit, tubing, boxes, enclosures, components, and other controls-related work.

B. Responsibilities - The BACS Trade wiring responsibilities shall include the following:

1. All wiring from mechanical and electrical alarms and functions (as scheduled on the drawings) as required to report these alarms and functions to the BACS head-end.

2. All line and low voltage wiring for the control of all HVAC motors (whether individual or as part of packaged equipment), automatic control valves, and dampers, including: wiring for EPs, PEs, relays, controllers, thermostats, actuating devices, unit heater controls, and cabinet heater controls, except as noted below.

3. The electrical trade shall provide "lock-out stop" control wiring.

4. A separate system of wiring for smoke and fire control of motors which are to be automatically and/or manually controlled by the fire protective alarm system will be run to the motor starters or BACS enclosures by the electrical trade.

5. A separate system of wiring for smoke and fire control of dampers that are to be automatically and/or manually controlled directly by the fire protective alarm system (i.e., not in response to motor operation), will be run by the electrical trades except for the power supply wiring to electric damper motors that is specifically excluded from the electrical trade work.

6. ATC Trade shall provide all power supply wiring for all ATC supplied components.

PART 3 - DOCUMENTATION REQUIREMENTS

3.1 GENERAL

A. This section of the guideline defines the requirements for the documentation of the installed systems. The BACS vendor shall generally provide the documentation covered herein.

3.2 BACS CONFIGURATION MANAGEMENT

A. Vendors providing controls for Cornell University shall maintain site-wide configuration documentation. Whenever the BACS is extended, the documentation required in this section shall be provided/updated per configuration management requirements to reflect the entire installation on the campus. Device naming and addressing must conform to Cornell's specific conventions as detailed in Cornell Design & Construction Standard 15956. No device will be connected to a Cornell network until these conventions have been understood and met.

3.3 DOCUMENTATION FORMAT

A. Hard Copy (General): Paper copies of the indicated deliverables shall be provided as directed by the project manager. Quantities shall be enumerated in the contract documents. At a minimum, three sets of hard copies shall be maintained; one at the facility, one in the HVACR shop, and one in the project maintenance manual.

B. Hard Copy (Control Panels): Each control panel on the project shall include an as-built hard copy of all drawings and documentation associated with that panel and its field devices. This documentation shall be provided in a plastic protective pocket mounted inside the panel door. In addition, see Operation and Maintenance Materials.

C. Electronic Copy: All submittal and as-built documents shall be provided electronically, to the HVACR shop. Different documents may be in different formats, however each shall be provided in one of the first two formats as well as in the format in which the document was originally created, if it is different.

1. Microsoft Office format (Word, Excel, etc.)
2. Adobe Portable Document Format (PDF).

3.4 SUBMISSIONS

A. Submittals: BACS documentation indicated herein shall be submitted for approval of the design professional and the project manager who shall get review and feedback information from the HVACR Shop.

B. As-Built Drawings: As-built documentation as indicated herein shall be maintained and submitted to reflect the final installed condition of the BACS. The as-built documents shall be kept up to date throughout the warranty period and submitted as final at the end of the warranty period. One set of documents and files shall be provided to be stored locally at the new facility and two sets shall be provided to be stored centrally.

3.5 DOCUMENTATION REQUIRED

A. Control Schematics: Control schematics shall be utilized to graphically indicate the systems, show the schematic configuration of the systems and location of control devices, define the point names and addresses (as applicable), and define the setpoints for control elements. Control schematics are required both as part of the contract documents (generated by the design professional), shop drawing submittals, and as-built document submittals. The following shall be included in the controls schematics at a minimum:

1. Point names.

2. Point addresses (not applicable to the contract documents).

3. Point type.

4. Normal position of output devices.

5. Device ranges.

6. Initial design intent setpoints modified as refined during construction/ commissioning for as-built submittals.

7. Bill of materials listing all devices and manufacturer numbers (not applicable to the contract documents).

8. Legend of device symbols.

B. Product Data: Submit manufacturer's technical product data for each control device, panel, controller, and accessory furnished indicating dimensions, capacities, performance and electrical characteristics, and material finishes. Also include installation, start-up, calibration, and maintenance instructions as well as all cable and tubing requirements. Provide these as a part of the shop drawings and as-built submittal.

C. Valve Schedules: Either with the control schematic or separately in shop drawing submittal and as-built submittal provide a valve schedule listing the following:

1. Size.
2. CV.
3. Design maximum flow.
4. Pressure drop at design maximum flow.
5. Position of valve at design condition.
6. Manufacturer.
7. Model/product number.
8. Close off rating.
9. Normal positions.
10. Valve characteristic.
11. Valve turndown.
12. Actuator information.

13. Design controlled circuit pressure differential range (coordinated with the submittals).

D. Valves shall be selected such that they are not, as a practice, "oversized." Valve sizes shall be picked as close as possible to meet the design pressure drop. The minimum CV shall be no less than 1.9 on all valves (See Section III, 3.04 "Control Valves" for additional information).

E. Control System Architecture Diagram: Provide a system architecture one-line diagram indicating schematic location of all controllers, workstations, LAN interface devices, gateways, etc. Indicate address and type for each control unit. Indicate physical media, protocol, communication speed, and type of each LAN (See also DCS 15956).

F. Control Sequence of Operations:

1. All projects shall include detailed sequence of operations. Sequences may be on the control schematics or in the specifications in the contract documents, but shall be included with the control schematics for the shop drawing and as-built submittal. Control sequences shall be highly detailed in the design phase and shall maintain this detail throughout the as-built submittal phase. The following shall be included as a minimum:

   a. Sequences in all modes of operation (i.e., on, off, occupied, unoccupied, warm-up, cool-down, summer, winter, economizer, etc.);

   b. Detailed steps during mode switches;

   c. Details of operation during and after a power outage. Loss of status associated with power outages must not be indicated as failures with a subsequent alarm or lock out;

   d. Specific direction on failure scenarios for loss of proof and all safety device trips;

   e. Setpoints, trip points, and ranges. Initially these shall be the designer's intent, and eventually be the actual setting at time of as-built submittal;

   f. Smoke control systems;

   g. Fire alarm panel interlocks and special operating modes.

2. All related equipment should be grouped together by areas served. Also, group all sequences into functional sections (i.e., start/stop, static pressure control, economizer, etc.).

G. Points List: A detailed point list shall be provided in tabular form either with the control schematics or separately. Indicate all physical and virtual points and organize by system/sub-system. Include names, descriptors, addresses (when known) and point types with applicable range as a minimum. These shall be provided electronically in either a database format or in a spreadsheet format.

H. Alarms and Alarms List: Either as part of the points list or as a separate list, an alarms list shall be provided. The list shall include the alarm point name, point type, and alarm parameters. All analog control loops shall include an adjustable setpoint deviation alarm based upon error and time. The alarm parameters shall be the state the point is in to cause a particular alarm. An example of a point in this list is as follows:

1. Supply air temp (AI) +/-5°F from setpoint.

I. Floor Plans: Provide a set of floor plans with all controllers/control panels, sensors, operator workstations, interface devices, UPS's, etc., located and identified. All network components (repeaters, routers, etc.) shall also be identified on the floor plan drawings. All BACS network wiring shall be shown and identified on the floor plan drawings.

J. Detailed Wiring Diagrams: Shop drawings and as-built submittals shall include detailed wiring diagrams. Indicate all required electrical wiring. Wiring diagrams shall include both ladder logic type diagrams for motor starter, control, and safety circuits and detailed digital interface panel point termination diagrams with all wire numbers and terminal block numbers identified. Provide panel termination drawings on separate drawings. Ladder diagrams shall appear on the system schematic. Clearly differentiate between portions of wiring that are factory-installed and portions to be field-installed. These shall be submitted with shop drawing and as-built submittals.

All wiring of related components that make up a system shall be grouped together in one diagram (e.g., all wiring diagrams for the components and devices on a particular AHU shall be shown on one drawing. The supply fan components and devices should not be shown separate from return fan components and devices, etc.).

K. Sample Graphics and Trends: If the project includes web-based graphics and trends for the use of interfacing to the BACS, the vendor shall submit for approval draft samples of the actual graphics to be used for the project. Design professional and project manager, after consultation with the HVACR Shop, shall approve the graphics.

L. Operation and Maintenance Materials: Provide Operation and Maintenance (O&M) materials generally in concert with training. O&M materials shall include the following:

1. Maintenance instructions and spare parts list for each type of control device, control unit, and accessory.

2. BACS User's Guides (Operating Manuals) for each controller type and for all workstation hardware and software and workstation peripheral.

3. BACS Programming Manuals for each controller type and for all workstation software.

4. All submittals with as-built information (product data, shop drawings, control logic documentation, hardware manuals, software manuals, installation guides or manuals, maintenance instructions, and spare parts lists). As-built panel drawings shall also be included as part of the O&M manual process. The drawings that are located in each panel shall incorporate all the systems controlled from that particular panel. The drawings shall include the system schematic and detailed panel wiring diagram (as detailed above). Also included (typically noted on the system schematic diagrams) should be the specific locations of any remote devices such as remote static pressure sensors, differential pressure sensors, etc.).

PART 4 - BACS INFRASTRUCTURE

4.1 ACCEPTABLE MANUFACTURERS

A. Automated Logic Corporation.

4.2 CONFIGURATION OF SYSTEMS

A. The control panels/enclosures housing the controllers will be located on each floor, to the extent possible, to share vertical and horizontal wire-ways to facilitate and minimize the cost of home-runs to terminal equipment.

B. Control panels shall be located in the equipment rooms, where practicable, and in locations such that the ambient conditions are between 50 and 90°F and 10 to 85% relative humidity. Control panels located in areas where conditions are outside of these ranges shall have enclosures outfitted with heating or cooling devices to provide the proper environmental conditions. Hoffman style enclosures with removable back plates and keyed, hinged covers shall be used. Enclosures shall be rated NEMA 4 when located in mechanical spaces and NEMA 1 when located in occupied spaces.

C. The HVACR Shop must have quick, direct access to all control panels to maintain building integrity similar to that provided for fire emergencies without going through user spaces. Field panels will be located outside of user areas where practical. If field panels must be located in user areas, they shall be in areas with easy access. Protection and separation for user activities will be provided.

4.3 CONTROLLERS

A. The controllers provided pursuant to this guideline shall meet the performance requirements for throughput, response time, point capacity, trend log capacity, etc., as stated in this section. The controllers shall also be configured and programmed to carry out the sequences of operation contained in the project documents. While this specification contains several constraints on the controller system architecture, it is recognized that a variety of configurations may be equally acceptable. For example, it may be possible to meet the project requirements with a single large controller or several smaller ones. Therefore, this guideline does not generally prescribe controllers' system architecture or controllers' detailed characteristics, such as processor speed, amount of memory, amount of I/O, power supply details, etc.

B. Since these guidelines with respect to controllers are performance oriented, rather than prescriptive, they will generally refer simply to “controllers” meaning computers capable of direct digital control. In those cases where distinguishing between controllers with differing capabilities is needed, the following nomenclature will be used:

1. Building-level controller. These are controllers that are connected to the campus backbone network and communicate over Ethernet using BACnet/IP.

   They will typically be used to control and monitor one or more large systems or be applied to other building-wide functions. They shall, at a minimum, meet the requirements of a BACnet Building Controller (B-BC).

2. System-level controller. These controllers may, or may not, be directly connected to the campus backbone network. They will typically be dedicated to the control of a single large piece of equipment such as an air handler or chiller and a lab environment with fume hoods. They shall, at a minimum, meet the requirements of a BACnet Advanced Application Controller (B-AAC).

3. Field-level controller. These controllers will be on a lower performance BACnet LAN such as MS/TP or ARCNET. They will typically be used for control of "unitary" devices such as VAV boxes, fan coil units, etc. They shall, at a minimum, meet the requirements of a BACnet Application Specific Controller (B-ASC).

4.4 UPDATING DATABASES AND GRAPHICS

A. Controllers: Controllers shall be provided with a real-time operating system resident in ROM. It shall support all specified functions. It shall provide a command prioritization scheme to allow functional override of control functions. At a minimum, the following shall be provided:

1. Real-time operating system software.

2. Real-time clock/calendar and network time synchronization (except field-level controllers).

3. Controller diagnostic software.

4. DDC software.

5. Alarm processing and buffering software.

6. Energy management software.

7. Data trending, reporting, and buffering software.

8. I/O (physical and virtual) database. Inputs and outputs shall have the capability to be overridden for emergency modes and testing. If the design documentation does not specifically indicate for which points this is required, control vendor shall request in writing a list of such points. If this has not been requested, the vendor shall reprogram or reconfigure the systems as required during testing.

B. Programming: The programming shall be logically segmented, documented, and titled, and expand on the specified sequence of operations. Each segment shall contain control logic for a specific controlled component of a system. This is to improve the ability of the end user to understand and interpret the logic easily. All software shall be submitted to the engineer and commissioning agent for review.

C. Trending: To support commissioning and building data mining, the BACS shall be capable of trending and archiving all points on building- and system-level controllers at a minimum of 15 minute intervals. The BACS shall also have the capability of trending at least five points on each field-level controller at an interval of 15 minutes. The trend data shall be uploaded to a central database as needed to prevent buffer overflow in the controller. Controller memory capability, network architecture, and communications bandwidth shall be designed to account for this trending. The controls vendor shall provide control trends during start up and prior to functional performance testing of the systems. Reports shall be scheduled to output the data to a common format such as comma separated text, Microsoft formats such as Excel and Access, and portable database format. Trended data may also be archived in an Owner-accessible SQL database.

D. Trend Graphs: Web-based software shall provide for displaying graphic plots of the trended values. The software shall support multiple scales, points and point types simultaneously. Control vendor shall configure these graphs in a logical manner for each system. Consult with the commissioning team members and project manager for required configuration. Provide a trend for every analog control loop that includes the setpoint, process variable, and control output.

E. Real-time Plotting: Software shall be provided for real time plotting/graphing of multiple values in user-defined time intervals. These graphs will typically be used in commissioning to observe loop responses and system reactions. Control vendor shall configure these graphs in a logical manner for each system. Consult with the Commissioning Team Members and Project Manager for required configuration.

F. Web-based Graphic: In the event that a Web server is to be supplied to supply access to graphic displays, these screens shall be provided:

1. Floor Plan Screens.

a. Provide floor plan screens for each floor and/or section of the building. Indicate the location of all equipment that is not located on the equipment room screens.

Indicate the location of temperature sensors and the device associated with each temperature-controlled zone (i.e., reheat coils, VAV terminals, fan-coils, single-zone AHU's etc.) on the floor plan screens. Display the space temperature point adjacent to each temperature sensor symbol. Indicate room numbers as provided by Cornell University. Provide a graphic link from each zone and/or equipment symbol shown on the graphic floor plan screens to each corresponding equipment schematic graphic screen;

b. Provide floor plan screens for each mechanical equipment room and, if mechanical equipment is situated there, the roof. Indicate the location of each item of mechanical equipment. Provide a link from each equipment symbol shown on the plan view screen to each corresponding mechanical system schematic graphic;

c. If multiple floor plans are necessary to show all areas, provide a graphic building key plan. Use elevation views and/or plan views as necessary to graphically indicate the location of all of the larger scale floor plans. Link the graphic building key plan to larger scale partial floor plans. Provide links from each larger scale floor plan graphic to the building key plan and to each of the other graphic floor plan screens;

d. Provide a graphic site plan with links to and from each building graphic.

2. System Schematic Screens.

a. Provide graphics for each air handling system. Indicate OA temperature and enthalpy, and mode of operation as applicable (i.e., occupied, unoccupied, warm-up, cool-down, etc.). Link screens for air handlers to the heating system and cooling system graphics Link screens for supply and exhaust systems, if they are not available in a single graphic;

b. Provide a system schematic graphic for each HVAC subsystem controlled. Each I/O point in the project shall appear in at least one graphic. System graphics shall include flow diagrams with status, setpoints, current analog input and output values, operator commands, etc., as applicable. General layout of the system shall be schematically correct. I/O devices shall be shown in their schematically correct locations. Include appropriate engineering units for each displayed point value.

Verbose names (English language descriptors) shall be included for each point on all graphics; this may be accomplished by the use of a pop-up window accessed by selecting the displayed point with the cursor. Indicate all adjustable setpoints on the applicable system schematic graphic or, if space does not allow, on a supplemental linked setpoint screen. All outputs shall be represented in terms of percent open and include a pop-up link to the control logic;

c. Provide a graphic for each hydronic system.

d. Provide a graphic for each terminal unit. In addition to points associated with the unit, indicate mode of operation as applicable (i.e., normal occupied, unoccupied, warm-up, maximum heating, maximum cooling, etc.). Provide links between the applicable floor plan screen and this screen. Also provide links to the graphics representing the parent systems.

e. Link screens for heating and cooling system graphics to utility history reports showing current and monthly energy usage, demands, peak values, etc.

f. Link screens to all schedules and setpoints.

PART 5 - MISCELLANEOUS SYSTEM OPERATION

5.1 SMOKE DETECTION DEVICES AND SMOKE DAMPERS

A. Installed Smoke Detection Devices and Smoke Dampers

1. Smoke dampers are installed at each duct/smoke barrier penetration.

2. Every smoke damper has a local duct smoke detector.

3. Every smoke damper has a local remote test station.

4. Every duct smoke detector is addressable and is connected to the building fire alarm system.

5. The building project area is provided with addressable area smoke detectors.

B. Fire Alarm Activation of Smoke Dampers

1. Duct Smoke Detectors:

a. Upon activation of any duct smoke detector, an addressable signal is sent to the building fire alarm system and the smoke damper associated with duct smoke detector is closed.

b. Upon receipt of the addressable duct smoke detector signal, the building fire alarm system shuts down both the supply and return fans or the exhaust fan, associated with the duct system that experienced the detector activation.

c. Upon receipt of the associated fan system drives being shut down, the building fire alarm system shall close all smoke dampers associated with that duct system on a 30 second delay.

C. Non-Fire Alarm System Activation of Smoke Dampers (These activations do not cause for a building fire condition to be annunciated)

1. Safety Device Activation

a. Upon activation of either the low-limit switch (freeze-stat) or the supply duct high static pressure switch, both the supply and return fans are de-energized via hardwiring of the low limit switch in the fan starter circuits.

b. The building fire alarm system point addressable module that is installed at the variable frequency drive of the supply and return fans then sends an addressable signal to the building fire alarm system indicating that the air handling system has been shut down.

c. Upon receipt of the associated fan system drives being shut down, the building fire alarm system shall close all smoke dampers associated with that duct system on a 30 second delay.

2. BMS (Building Management System) Component Fault

a. Upon activation of any of the following BMS component faults, the supply and return fans, or exhaust fan are de-energized via BMS.

1) Supply fan VFD fault

2) Return fan VFD fault

3) Exhaust fan VFD fault

4) Exhaust fan current sensor fault

5) Outside air damper end switch fault

6) Return air damper end switch fault

7) Exhaust air damper end switch fault

b. The building fire alarm system point addressable module that is installed at the variable frequency drive, or motor starter current sensor, of both the supply and return fans or exhaust fan, then sends an addressable signal to the building fire alarm system indicating that the air handling system has been shut down.

c. Upon receipt of the associated fan system drive/starter being shut down, the building fire alarm system shall close all smoke dampers associated with that duct system on a 30 second delay.

3. EMCS Operator Activation:

   a. When the EMCS system operator overrides the operational status of the air handling system and shuts down the supply, return, or exhaust fans.

   b. The shutdown of the supply, return or exhaust fans shall be interlocked through DDC programming. If the supply fan is shutdown, the return fan shall also be shut down automatically. If the return fan is shutdown, the supply fan shall be shut down automatically.

   c. The building fire alarm system point addressable module that is installed at the variable frequency drive, or motor starter current sensor, of both the supply and return fans or exhaust fan, then sends an addressable signal to the building fire alarm system indicating that the air handling system has been shut down.

   d. Upon receipt of the associated supply, return or exhaust fan system drive/starter being shut down, the building fire alarm system shall close all smoke dampers associated with that duct system on a 30 second delay.

4. Maintenance Operator Activation:

   a. When a building maintenance staff member manually shuts off the supply, return or exhaust fan at the starter disconnect switch, the supply, return or exhaust fans are shutdown.

   b. The shutdown of the supply, return or exhaust fans shall be interlocked through DDC programming. If the supply fan is shutdown, the return fan shall also be shut down automatically. If the return fan is shutdown, the supply fan shall be shut down automatically.

   c. The building fire alarm system point addressable module that is installed at the variable frequency drive, or motor starter current sensor, of both the supply and return fans or exhaust fan, then sends an addressable signal to the building fire alarm system indicating that the air handling system has been shut down.

   d. Upon receipt of the associated supply, return or exhaust fan system drive/starter being shut down, the building fire alarm system shall close all smoke dampers associated with that duct system on a 30 second delay.

D. Smoke Damper Testing - M/E Engineering offers the following suggestions for a smoke damper testing protocol. The actual final protocol needs to be authored and approved by all Cornell parties and agencies of interest.

1. Duct Smoke Detector (Fire Alarm Condition):

a. Under controlled conditions and with proper notification to the Building Manager and Cornell Fire and Safety, apply smoke to any duct smoke detector in the ductwork of any air handling systems which serve the project area.

b. Upon receipt of the addressable duct smoke detector signal, the building fire alarm system shuts down both the supply and return, or exhaust fans associated with the duct system that experienced the detector activation.

c. The building fire alarm system point addressable module that is installed at the variable frequency drive, or motor starter current sensor, of both the supply and return fans or exhaust fan, then sends an addressable signal to the building fire alarm system indicating that the air handling system has been shut down.

d. Upon receipt of the associated supply, return or exhaust fan system drive/starter being shut down, the building fire alarm system shall close all smoke dampers associated with that duct system on a 30 second delay.

e. Confirm damper closure at the local smoke damper access door.

2. Safety Device Activation (Non-Fire Alarm Condition)

a. Under controlled conditions and with proper notification to the Building Manager, manually trip the low limit switch (freeze-stat) associated with any air handling system in the project area.

b. The building fire alarm system point addressable module that is installed at the variable frequency drive, or motor starter current sensor, of both the supply and return fans or exhaust fan, then sends an addressable signal to the building fire alarm system indicating that the air handling system has been shut down.

c. Upon receipt of the associated supply, return or exhaust fan system drive/starter being shut down, the building fire alarm system shall close all smoke dampers associated with that duct system on a 30 second delay.

d. Confirm damper closure at the local smoke damper access door.

3. BMS Component Interlock or Fault:

   a. Under controlled conditions and with proper notification to the Building Manager, manually cause for a fault condition to occur in any of the following BMS components:

      1) Supply fan VFD fault

      2) Return fan VFD fault

      3) Exhaust fan VFD fault

      4) Exhaust fan current sensor fault

      5) Outside air damper end switch fault

      6) Return air damper end switch fault

      7) Exhaust air damper end switch fault

   b. The building fire alarm system point addressable module that is installed at the variable frequency drive, or motor starter current sensor, of both the supply and return fans or exhaust fan, then sends an addressable signal to the building fire alarm system indicating that the air handling system has been shut down.

   c. Upon receipt of the associated supply, return or exhaust fan system drive/starter being shut down, the building fire alarm system shall close all smoke dampers associated with that duct system on a 30 second delay.

   d. Confirm damper closure at the local smoke damper access door

4. EMCS Operator Activation (Non-Fire Alarm Condition):

   a. Under controlled conditions and with proper notification to the Building Manager, manually override the operational status of any air handling system via laptop, PC or remote access to EMCS Webcontrol and shutdown the associated air handing system.

   b. The shutdown of the supply, return or exhaust fans shall be interlocked through DDC programming. If the supply fan is shutdown, the return fan shall also be shut down automatically. If return fan is shutdown, the supply fan shall be shut down automatically.

c. The building fire alarm system point addressable module that is installed at the variable frequency drive, or motor starter current sensor, of both the supply and return fans or exhaust fan, then sends an addressable signal to the building fire alarm system indicating that the air handling system has been shut down.

d. Upon receipt of the associated supply, return or exhaust fan system drive/starter being shut down, the building fire alarm system shall close all smoke dampers associated with that duct system on a 30 second delay.

e. Confirm damper closure at the local smoke damper access door.

5. Maintenance Operator Activation (Non-Fire Alarm Condition):

a. Under controlled conditions and with proper notification to the Building Manager, manually shut off any air handling system within the project area.

b. The shutdown of the supply, return or exhaust fans shall be interlocked through DDC programming. If the supply fan is shutdown, the return fan shall also be shut down automatically. If the return fan is shutdown, the supply fan shall be shut down automatically.

c. The building fire alarm system point addressable module that is installed at the variable frequency drive, or motor starter current sensor, of both the supply and return fans or exhaust fan, then sends an addressable signal to the building fire alarm system indicating that the air handling system has been shut down.

d. Upon receipt of the associated supply, return or exhaust fan system drive/starter being shut down, the building fire alarm system shall close all smoke dampers associated with that duct system on a 30 second delay.

6. Confirm damper closure at the local smoke damper access door

PART 6 - COMMISSIONING, TRAINING AND WARRANTY

6.1 COMMISSIONING

A. The BACS shall be fully commissioned. All acceptance testing, documentation, and training shall be required.

B. The BACS Trade's responsibilities for commissioning and check-out include:

1. Provide all logic, graphics, and trends for review prior to the start of field commissioning activities.

2. Provide a complete calibration and operational check for each individual point and function contained within the BACS.

3. Conduct the checkout with the use of point/function log sheets to be prepared by the contractor. The Owner shall approve the log sheet format.

4. Submit log sheets to the Owner prior to the commencement of any final acceptance testing.

5. Certify, in writing, to the Owner prior to the commencement of final acceptance testing that all components of the BACS system are functioning as per the requirements of the contract documents.

6. Provide to the Owner as-built drawings and documentation at least four (4) weeks prior to the commencement of any final BACS acceptance testing.

7. The BACS Trade shall issue a report upon project completion stating that the system is complete, has been adjusted, and has had all hardware and software functions verified, that all analog control loops are tuned, and is operating in accordance with the specifications. Any deviations from specified settings or operations necessitated during system adjustment shall be specifically noted.

8. The Contractor shall check out the installation with a representative from PDC. The checkout shall consist of verifying the ability of the BACS to communicate with the central EMCS system, verifying the calibration of each sensor and/or transmitter, and verifying the operation of each control point.

9. All software processes shall be thoroughly demonstrated to the Owner's representative. Alarm conditions shall be simulated for conformance. Analog control points shall be exercised through their entire range. All control interlocks and sequences shall be completely verified. The checkout shall be a thorough and exhaustive review of the installation to assure proper operation of the total system.

6.2 TRAINING

A. Upon completion of the work and acceptance by the Owner, factory representatives of the control manufacturer shall provide instruction to the Owner's operating personnel who have responsibility for the mechanical systems and controls installed by the contractor. The contractor shall provide 2-8 hours of training.

B. The contractor shall make available to the Owner regular, scheduled training courses for ongoing training of the Owner's operating personnel. Programs shall include hardware- and software-oriented courses as well as energy conservation and management courses.

C. In addition to the normal training listed above, all vendors will be required to provide two weeks of training at the BACS manufacturer's training facility for four people. This training only needs to be provided once for a particular set of installed BACS products. If a contractor has provided this training previously (on a previous project or directly with the Owner) then the additional training does not need to be provided again.

6.3 WARRANTY

A. Except as otherwise specified, the Contractor shall warrant and guarantee all work against defects in materials, equipment, and workmanship for a period of one (1) year from the date of acceptance of the work as evidenced by a resolution to that effect by the Owner and for that period of time noted in special or extended warranties.

B. The Contractor shall provide all recommended preventative maintenance of the materials, equipment, and workmanship as necessary and as described in the operating and maintenance manuals during the warranty period. In addition, the Contractor shall provide two (2) semi-annual service visits (i.e., one visit during the peak cooling season and one visit during the peak heating season) to test and evaluate the performance of the equipment. The Contractor shall provide a written report of the test and evaluation results. The service visits shall include but not be limited to:

1. Checking and, if necessary, correcting the calibration of the sensors, transducers, and transmitters for air flow, liquid flow, pressure, temperature, and humidity;

2. Checking and, if necessary, correcting the operation of the dampers and damper actuators;

3. Checking and, if necessary, correcting the operation (i.e., monitoring and command) of the system points.

END OF SECTION 23 09 23

This page intentionally left blank.

SECTION 23 20 10 - PIPING SYSTEMS

PART 1 - GENERAL

1.1 WORK INCLUDED

A. Provide labor, materials, equipment and services as required for the complete installation designed in Contract Documents.

1.2 SUBMITTALS

A. Schedule of pipe materials, fittings, and connections.

B. Copies of EPA certification cards shall be submitted for those who will be working on the site prior to commencement of any refrigeration work.

C. Grooved mechanical connection system.

D. Anchors and Guides:

1. Provide detailed fabrication drawings for all field-fabricated anchors and guides and intermediate structural elements.

2. Provide submittals for pre-manufactured anchors and guides.

3. Submittals shall include comprehensive structural engineering design and analysis by a qualified professional engineer, licensed to practice in the State in which the project is located using the performance and design criteria specific to this project for support and attachment of anchors and guides to building structure.

PART 2 - PRODUCTS

2.1 GENERAL

A. Pipe and fittings shall be new, marked with manufacturer's name and comply with applicable ASTM and ANSI Standards.

2.2 COPPER TUBE AND FITTINGS - SOLDER JOINT

A. Pipe: ASTM B88; Type L hard temper. Soft temper only as called for. Plans show copper tube sizes.

B. Tees, Elbows, Reducers: Wrought copper, ANSI B16.22 or cast bronze; ANSI B16.8 solder end connections.

C. Unions And Flanges: 2 in. and smaller use unions, solder type, cast bronze, ground joint, 150 lb. swp: 2-1/2 in. and over use flanges, cast bronze, companion type, ASME drilled, solder connection, 150 lb. swp.

D. Solder Materials: No-lead solder, using alloys made from tin, copper, silver and nickel.

E. Make: Harris "Stay-Safe 50" and "Bright", Engelhard "Silverbright 100", Willard Industries "Solder Safe (silver bearing), Canfield "Watersafe" or approved equal.

2.3 COPPER DRAINAGE TUBE AND FITTINGS - SOLDER JOINT

A. Pipe: ASTM B306, Type DWV, hard temper.

B. Fittings: Wrought copper, ANSI B16.29 or cast bronze, ANSI B16.23; solder end connections.

C. Solder Materials: No lead solder, using alloys made from tin, copper, silver and nickel.

D. Make: Harris "Stay-Safe 50" and "Bright", Engelhard "Silverbright 100", Canfield "Watersafe", or approved equal.

2.4 COPPER TUBE AND FITTINGS - GROOVED MECHANICAL CONNECTIONS

A. Pipe: ASTM B88, Type K or L, hard temper.

B. Fittings: Wrought copper, roll grooved mechanical connections, ASTM B-75, ANSI B16.22 for sizes 2 in. - 4 in., with copper tube dimensioned grooved ends designed to accept rolled grooved couplings (flaring of tube and fitting ends to IPS dimensions is not permitted).

C. Couplings: Ductile iron, ASTM A-536, with copper colored alkyd enamel finish, designed for rolled grooved piping. Housings cast with offsetting, angle pattern, bolt pads to provide rigidity.

D. Gaskets: Grade "EHP" EPDM synthetic rubber, color-coded, -30°F to 250°F temperature range, suitable for water service.

E. Bolts and Nuts: Heat treated, hex head carbon steel, ASTM A183 and A449, cadmium plated or zinc electroplated finish.

F. Design Equipment: Victaulic Style 607 couplings.

G. Make: Victaulic

2.5 STAINLESS STEEL PIPE AND FITTINGS

A. Pipe: Type 304/304L, Schedule 10S, stainless steel conforming to ASTM A312 with roll grooved ends for grooved mechanical connections.

B. Fittings shall be grooved 304L stainless steel.

C. Couplings shall be galvanized.

D. Grade EPDM suitable for deionized water

E. Fittings: Elbows, tees, laterals, reducers, adapters as required. Same construction as couplings.

F. Design Basis: Victaulic.

2.6 DIELECTRIC PIPE FITTINGS

A. Description: Assembly or fitting having insulating material isolating joined dissimilar metals to prevent galvanic action and stop corrosion.

B. Dielectric unions are not allowed.

C. Flanges: Factory-fabricated, companion-flange assembly, for 150 or 300 psig minimum pressure to suit system fluid pressures and temperatures with flange insulation kits and bolt sleeves.

D. Make: EPCO, Capitol Manufacturing, Watts or approved equal.

2.7 HANGERS, INSERTS, AND SUPPORTS

A. Hangers, Inserts, Clamps: B-Line, Grinnell, Michigan Hanger, PHD Manufacturing.

B. Hangers:

1. Adjustable, wrought malleable iron or steel with electroplated zinc or cadmium finish. Copper plated or PVC coated where in contact with copper piping. Hot-dipped galvanized finish for exterior locations.

2. Adjustable ring type where piping is installed directly on hanger for piping 3 in. and smaller.

3. Adjustable steel clevis type for 4 in, and larger, and where insulation passes through hanger.

4. Steam (over 50 psi) piping, adjustable yoke pipe roller equivalent to Grinnell Figure #181.

5. Hangers sized to permit passage of insulation through the hanger for chilled water and steam (over 50 psi) piping.

6. Nuts, washers and rods with electroplated zinc or cadmium finish. Hot-dipped galvanized finish for exterior locations.

7. All refrigerant lines must be supported by strut channel hangers and supports. All liquid and suction lines must be clamped securely to the strut channel. All discharge piping to and from remote air cooled condensers shall also be clamped per Manufacturer's recommendations to minimize vibrations.

Clamp assemblies shall be refrigeration cushion clamps (for example, Hydra-Zorb). A piping support shall be installed within 12 inches of each horizontal elbow and equipment connection.

C. Hanger Rods

1. Process Areas - Hanger Rods: Threaded both ends only, not threaded between ends. Use adjusting locknuts at upper attachments and hangers. No wire, chain, or perforated straps are allowed.

D. Hanger Shields:

1. Pre-insulated type:

a. Insulated pipes shall be protected at point of support by a 360° insert of high density, 100 psi waterproof calcium silicate, encased in a 360° sheet metal shield. Insulation insert to be same thickness as adjoining pipe insulation and extend 1 in. beyond sheet metal shield.

2. Field-insulated type:

a. #18 USSG, galvanized steel shields, minimum 120° arc. Provide temporary blocking between pipe and hanger to maintain proper spacing for insulation.

3. Shield Sizing:

PIPE SIZE	SHIELD LENGTH	MINIMUM GAUGE
1/2" to 3-1/2"	12"	18
4"	12"	16
5" and 6"	12"	14
8" to 14"	24"	12
16" to 24"	24"	10

4. Hanger shield gauges listed are for use with band type hangers only. For point loading (roller support), increase shield thickness by one gauge, and length by 50%.

E. Spacing Schedule:

PIPE SIZE	STEEL	COPPER	PVC PLASTIC	ROD SIZE
3/4 to 1 in.	8 ft.	6 ft.	3 ft.	3/8 in.
1-1/4 to 2 in.	10 ft.	6 ft.	3 ft.	3/8 in.

PIPE SIZE	STEEL	COPPER	PVC PLASTIC	ROD SIZE
2-1/2 to 4 in.	12 ft.	10 ft.	4 ft.	1/2 in.
5 and 6 in.	12 ft.	10 ft.	4 ft.	5/8 in.
8 in.	12 ft.	10 ft.	4 ft.	3/4 in.

F. Inserts: Carbon steel body and square insert nut, galvanized finish, maximum loading 1,300 lbs., for 3/8 in. to 3/4 in. rod sizes, reinforcing rods on both sides, MSS-SP-69 Type 19 or approved equal.

G. Beam Attachments:

1. C-Clamp, locknut, electroplated finish, UL listed, FM approved, for pipe sizes 2 in. and smaller.

2. Center load style with clamp attachments that engage both edges of beam, electroplated finish, UL listed, FM approved, for pipe sizes larger than 2 in., refer to "Supports" for additional requirements.

H. Supports:

1. For all piping larger than 2 in., provide intermediate structural steel members for hanger attachment. Members shall span across bar joists at panel points of joists. Secure member to structure. Select size of members based on a minimum factor of safety of four.

2. For weights under 1000 lbs.: Insert, "U" shaped channel, beam clamps or other structurally reviewed support. The factor of safety shall be at least four. Follow manufacturer's recommendations.

3. For weights above 1000 lbs.: Drill through floor slabs and provide flush plate welded to top of rod or provide additional inserts and hangers to reduce load per hanger below 1000 lbs.

4. For metal decks: Drill hole through for hanger rods and embed a welded plate in concrete or use devices designed for this application, with a safety factor of four.

5. Make: Hilti, ITW Ramset, Phillips "Red Head", or approved equal.

I. Trapeze Hangers:

1. For use on 1-1/2" and smaller piping only.

2. Hangers shall be supported with rod sized with a safety factor of four.

3. May be manufactured type "U" shaped channel, or suitable angle iron or channel. Round off all sharp edges.

4. Securely fasten piping to trapeze with "U" bolt or straps, dissimilar metals shall not touch, use isolation gaskets.

5. Make: B-Line, Kindorf, Unistrut, or approved equal.

2.8 PIPING ACCESSORIES

A. Escutcheon Plates: Steel or cast brass polished chrome, split hinge type with setscrew, high plates where required for extended sleeves. Escutcheons plates for process spaces shall be stainless steel.

B. Pipe Guides: Cylindrical steel guide sleeve, proper length for travel, integral bottom base anchor, top half removable. Split steel spider to bolt to pipe, copper plated spider for copper pipe. Insulated style where pipe is required to be insulated. Make: Tri-Sate Industries, or equal.

C. Anchors:

1. Pipe support; same material as pipe; as manufactured by Pipe Shields Model C1000 or C2000, Keflex, Metraflex, Flexonics or Advanced Thermal Systems.

2. Pipe Anchors:

a. Anchors shall be designed and located as to prevent stress to piping or building structural components from exceeding those permitted by ASME B31.9 and to prevent transfer of loading and stressing to connected equipment.

3. All field or shop fabricated anchor and equipment and piping supports shall include detail fabrication drawings submittals accompanied by comprehensive structural engineering design and analysis by a qualified, profession engineer licensed to practice in the State of New York, using the performance and design criteria specific to the project and system in question.

D. Pipe Roll Stand: Cast iron roll stand. Make: Advanced Thermal Systems, Carpenter and Patterson, ITT Grinnell, Pipe Shields.

2.9 SLEEVES

A. Standard Type:

1. Schedule 40 black steel pipe sleeves for structural surfaces, two pipe sizes larger than the pipe, and as recommended by the sealing element manufacturer. Full circle water stop collar for sleeves located in below grade walls, wet wells and waterproofed surfaces. The collar shall be fabricated from steel plate and welded to the sleeve around its entire circumference.

2. Schedule 40, PVC sleeves or sheet metal sleeves for nonstructural surfaces and existing construction. Sheet metal sleeves shall be 18-gauge minimum and braced to prevent collapsing.

B. Pre-Insulated Type:

1. Adjustable or fixed length metal cans, 24-gauge minimum sized for 1 in. spacing between insulation and can. Insulation shall consist of a 360° waterproofed calcium silicate insert sized to extend 1 in. beyond wall or floor penetration. Calcium silicate insert shall be the same thickness as adjoining pipe insulation. Spacing between shield and can packed at each end with double neoprene rope positively fastened.

2.10 SEALING ELEMENTS

A. Expanding neoprene link type, watertight seal consisting of interlocking links with zinc plated bolts.

1. Make: Thunderline "Link-Seal" Series 200, 300 or 400, Pyropac, Calipco.

B. Waterproof Type:

1. Exterior walls, below grade, above floor: Synthetic rubber material with zinc plated bolts. Make: "Link-Seal" Series 200, 300 or 400, Pyropac, Calipco.

2.11 FIRESTOP SYSTEM FOR OPENINGS THROUGH FIRE RATED WALL FLOOR ASSEMBLIES

A. Materials for firestopping seals shall be listed by an approved independent testing laboratory for "Through-Penetration Firestop Systems". The system shall meet the standard fire test for Through-Penetration Firestop Systems designated ASTM E814. Firestop system shall be provided at locations where piping passes through fire rated wall, floor/ceiling, or ceiling/roof assembly. Minimum required fire resistant ratings of the assembly shall be maintained by the Firestop System. Installation shall conform with the manufacturer's recommendations and other requirements necessary to meet the testing laboratory's listing for the specific installation.

2.12 PIPING MATERIALS AND SCHEDULE

A. See Exhibit "A", "Schedule of Piping Materials" at end of this Section for (HVAC) piping.

PART 3 - EXECUTION

3.1 EQUIPMENT AND SYSTEMS

A. Equipment and systems in accordance with laws, codes, and provisions of each applicable section of these specifications. Accurately establish grade and elevation of piping before setting sleeves. Install piping without springing or forcing (except where specifically called for), making proper allowance for expansion and anchoring. Arrange piping at equipment with necessary offsets, union, flanges, and valves, to allow for easy part removal and maintenance. Offset piping and change elevation as required to coordinate with other work. Avoid contact with other mechanical or electrical systems. Provide adequate means of draining and venting units, risers, circuits and systems. Conceal piping unless otherwise called for. Copper tubing shall be cut with a wheeled tubing cutter or other approved copper tubing cutter tool. The tubing must be cut square to permit proper joining with the fittings. Ream pipes after cutting and clean before installing. Cap or plug equipment and pipe openings during construction. Install piping parallel with lines of building, properly spaced to provide clearance for insulation. Make changes in direction and branch connections with fittings. Do not install valves, union and flanges in inaccessible locations. Provide trap seal of adequate depth on drain pans.

B. Provide reducers at all control valves, where control valve is smaller than pipeline size. Reducers for steam control valves shall be eccentric type. Provide unions at each side of every control valve and reducers directly adjacent to the unions.

C. Provide reducers at all balance valves, where balance valve is smaller than pipeline size.

3.2 PIPING OVER ELECTRICAL EQUIPMENT

A. Contractor shall route piping to avoid installation directly over electric equipment (within 18" horizontally), including, but not limited to panels, transformers, disconnects, starters and fused switches. In the event it cannot be avoided, the Contractor shall notify the Engineer in writing and provide a sheetmetal drip shield under the pipe which extends 3'0" beyond the electrical equipment.

3.3 WATER SYSTEMS

A. Top connection for upfeed, bottom or side connection for downfeed. Grade off level; up in direction of flow and down toward drain.

3.4 HANGERS, INSERTS AND SUPPORTS

A. Piping shall not be supported by wires, band iron, chains, or from other piping, not by vertical expansion bolts. Support each pipe with individual hangers from concrete inserts, welded supports, or beam clamps of proper configuration and loading design requirements for each location. Trapeze hangers are acceptable for racking of multiple pipes of 1-1/2" or less in size. Follow manufacturer's safe loading recommendations. Suspend with rods of sufficient length for swing and of size as called for, using four nuts per rod. Provide additional rustproofed structural steel members, where required for proper support.

Provide oversized hangers where insulation/supports must pass between pipe and hanger. Hangers, when attached to joists, shall only be placed at the top or bottom chord panel point. Only concentric type hangers are permissible on piping larger than 2-1/2", "C" types are permitted for piping 2-1/2" and smaller. Provide riser clamps for each riser at each floor.

3.5 PIPE CONNECTIONS

A. Solder Connections: Nonacid flux and clean off excess flux and solder.

B. Threaded Connections: Clean out tapering threads, made up with pipe dope; screwed until tight connection. Pipe dope must be specific for each application.

C. Dielectric Pipe Fittings: Provide dielectric couplings or flanges at ALL equipment connections where dissimilar metals meet. In addition, provide dielectric couplings or flanges in all open type piping systems (condensing water, domestic water, etc.) where dissimilar metals are to be joined. Dielectric couplings or flanges are not required in typical closed systems such as heating water, chilled water, heat pump loop, etc. except for the equipment connections.

3.6 HANGER SHIELDS

A. Provide at hangers for chilled water and steam (over 50 psi) piping. Pre-insulated type or field-insulated type at Contractor's option.

3.7 SLEEVES

A. Provide for pipes passing through floors, walls or ceilings.

B. Pre-insulated type: Required for chilled water and steam (over 50 psi) piping.

C. Standard type: Provide for piping, except as called for.

D. Extend 1/8 in. above finished areas. In above grade mechanical and other areas with floor drains; use steel pipe sleeves 2 in. above floor. Use pipe sleeves in bearing walls, structural slabs, beams and other structural surfaces, and where called for. Sleeves shall be as small as practical, consistent with insulation, so as to preserve fire rating. Fill abandoned sleeves with concrete. Provide rubber grommet seals for pipes passing through ducts or air chambers or built-up housings.

3.8 ANCHORS

A. Provide piping system anchors where shown on the plans, and as recommended by the expansion joint/loop manufacturer. Where an anchor is shown at a change in piping direction, it shall fully control movement in both directions. In lieu of a single anchor fabricated for two directional control, two (2) individual anchors may be provided. Provide detailed fabrication drawings for all field-fabricated anchors.

B. Design anchors and equipment and piping supports including comprehensive structural engineering analysis by a qualified professional engineer, licensed to practice in the State of New York using the performance and design criteria specific to this project.

3.9 ALIGNMENT GUIDES

A. Provide alignment guides to guide expansion and to avoid end-loading and torsional stress.

B. Install two (2) or more guide(s) on each side of flexible expansion loop. Install guides nearest to expansion joint not more than four (4) pipe diameters from expansion joint.

C. Attach guides to pipe and secure guides to building structure.

3.10 SLEEVE PACKING

A. Seal void space at sleeves as follows

1. Interior locations: Firmly pack with fiberglass and caulk.

2. Exterior walls and below grade cored holes: Use sealing element.

3. Fire rated, partitions and floor slabs: Use fire rated sealing elements, materials and methods. Provide per manufacturer's instructions to maintain firestop.

4. Waterproofed walls and floors: Use waterproof sealing element, device, or compound.

3.11 ESCUTCHEON PLATES

A. Provide polished chrome escutcheon plates for exposed piping passing through floors, walls or ceilings, except in Boiler, Fan and Mechanical Rooms.

3.12 CLEANING CHILLED WATER SYSTEMS

A. Cornell University's continual approach of protecting its community and the environment must be adhered to in the application of chemicals pertinent to process water loops. In addition, University policy dictates that "under no circumstances should chemicals be disposed of by pouring into sinks or other drains leading to sanitary or storm sewers".

B. All chemicals and formulations prescribed for the cleaning and treatment of process water systems at the University must meet the following specified criteria:

1. They must be ecologically compatible so that any discharge will not create an environmental impact.

2. They must be industrial and toxicologically safe so as to minimize personnel and equipment exposure to hazardous conditions.

3. Every effort must be made to maintain a sense of uniformity in chemical formulation to insure a line of continuity. Deviation from existing formulations that are applied across the University are kept to a minimum. This relieves the University of any burden that arises from trying to maintain adequate protection using numerous treatments.

4. All material proposed for application must have the prior approval of Environmental Health and Safety, Facilities Engineering and Facilities Management Pipe Shop. In order to thoroughly evaluate the products performance, it is recommended that the following be submitted at the time of proposal.

   a. Material Safety Data Sheets for all products that are to be applied. All sheets are required to contain complete formulations. Further documentation of qualitative composition must be included if Material Safety Data Sheets do not supply all product(s) components.

   b. Product Data Sheets specifying overall product description and application guidelines.

   c. Methods of analysis for determining product residuals. Proposals should specify qualitative and quantitative procedures of evaluating actual product levels. They should also include recommended parameters for all products, expressed in either terms of parts per million or milligrams per liter.

   d. Expected performance levels of products; this should include expected corrosion rates, expressed in mils per yea. If the product is a biostatic nature, what levels of biological growth should be expected if the product is applied at recommended dosages.

   e. Provisions should be submitted for the removal for any unused chemicals. In addition, provisions must be provided for the disposal of all empty containers.

5. The above mentioned criteria will serve as a guide for the information required for submittal of approval concerning any chemical treatment applied at Cornell University. No water treatment should be purchased, delivered or applied without consideration to the previously mentioned guidelines.

C. Cleaning

1. Cleaning procedures for newly installed systems shall be as follows:

   a. Step 1: Adjust all control valves and balancing valves to full open position during the cleaning and treatment process.

b. Step 2: Fill system and add a general dispersant for iron, mud, silt, and microbiological matter at a concentration recommended by the chemical manufacturer. Pay particular attention to the type of material being cleaned (steel, copper, aluminum, etc.) Test for concentration. Circulate solution for a minimum of eight hours. Flush system until system water pH and iron levels are consistent with the feed domestic water levels. Clean strainers and dead end piping legs. Provide test results to the Facilities Management Water Treatment Lab;

c. Step 3: Arrange for inspection by a representative from the Facilities Management Water Treatment Lab before proceeding to chemical treatment.

2. For extensions to existing building systems, follow the procedures for newly installed systems. Provide temporary piping, valving, and pumping system isolated from the existing building system as needed to perform cleaning procedures prior to final connection to the existing building system.

D. Treatment Chemicals

1. Treatment chemicals for non-glycol, non-potable systems shall be as follows:

a. After cleaning and inspection, immediately add a molybdate based corrosion inhibitor. Acceptable corrosion inhibitors shall include a combination of sodium molybdate, sodium hydroxide, tolytriazole and organic polymers. Test for residual concentrations as follows:

1) Molybdate: 150 ppm
2) pH: 8.3-9
3) Tolytriazole: 5 ppm

b. Arrange for inspection by a representative from the Facilities Management Water Treatment Lab prior to final acceptance.

2. Treatment chemicals for glycol heating systems shall be as follows:

a. After cleaning and inspection, drain system then refill with a glycol formulation as follows:

1) Propylene Glycol: 400,000 ppm (40%)
2) Nitrate: 1500 ppm
3) Tolytriazole: 20 ppm
4) Water: Balance (water to be added to glycol solution shall meet manufacturers standard for quality)
5) Color: Olive Green
6) Preferred Manf/Material: PG #36

b. Arrange for inspection by a representative from the Facilities Management Water Treatment Lab before prior to final acceptance.

3. Chilled Water Systems:

a. Chemicals shall not be used to treat chilled water systems connected to the campus chilled water loop. Fill system with potable water. Notify the Central Energy Plant for permission to begin circulating water into the campus chilled water loop.

E. Identification

4. Provide a three ring binder for each hydronic system treated with chemicals that includes the following information:

a. SDS
b. Product data sheets
c. Chemical type
d. Test points
e. Control limits
f. System volume
g. Direction to drain system to sanitary.
h. System volume shall be stenciled on the system expansion tank in a visible location.

3.13 TESTS

A. Test piping and accessories before insulation, connection to existing piping, or concealment. Repeat as many times as necessary to prove tight system. Notify Owner's Representative at least seven days in advance of each test. Isolate valves and equipment not capable of withstanding test pressures. Make leaks tight; no caulking permitted. Remove and replace defective fittings, pipe or connections. Furnish necessary pumps, gauges, equipment, piping, valving, power and labor for testing. Certify that tests have been successfully completed.

B. Schedule of Test Requirements:

1. Chilled water: Hydrostatic, 100 psig at high point of system; two hours duration.

2. Test: No change in pressure under stable temperature conditions.

3. Equipment: Test at working pressures.

3.14 PIPE LINE SIZING

A. Pipe sizes called for are to be maintained. Pipe sizing changes made only as reviewed by Owner's Representative. Where discrepancy in size occurs, the larger size shall be provided.

EXHIBIT "A" - PIPING MATERIALS (HVAC)

SERVICE	PIPE MATERIALS	FITTINGS	CONNECTIONS
Chilled water 2-1/2 in. and smaller	ASTM B88 Type L hard copper	ASME B16.22 Wrought copper	ASTM B32 95 Sn/5 Sb solder or 95.5 Sn/4 cu/.5 Ag solder
Process chilled water 4” and smaller	ASTM B88 Type L hard copper	ASME B16.22 Wrought copper	ASTM B32 95 Sn/5 Sb solder or 95.5 Sn/4 cu/.5 Ag solder
CESR 85 chilled water, where noted.	ASTM B88 Type L hard copper	Grooved, rigid couplings, ductile iron	Mechanical with gasket. Gaskets shall be Grade "E" suitable for water service.
CESR 85 chilled water, where noted.	ASTM A312 304L Stainless steel	Grooved, rigid couplings, galvanized	Mechanical with gasket. Gaskets shall be Grade "E" suitable for water service.

END OF SECTION 23 20 10

SECTION 23 21 10 - WATER SYSTEMS SPECIALTIES

PART 1 - GENERAL

1.1 WORK INCLUDED

A. Provide labor, materials, equipment and services as required for the complete installation designed in Contract Documents.

1.2 SUBMITTALS

A. Submit product data on water system specialties.

1.3 GENERAL REQUIREMENTS

A. Equipment and accessories shall be rated for a minimum of 125 psi wwp, and 250°F temperatures. Manufacturer's written installation procedures shall become a part of these specifications.

PART 2 - PRODUCTS

2.1 AIR ELIMINATING SUPPLY FITTING

A. Designed to eliminate air from supply water; located in supply header from heat generating devices; flanged or screwed.

B. Design Equipment: Bell & Gossett "Airtrol".

C. Manufacturers: Armstrong, Bell & Gossett, Spirotherm.

2.2 FLOW BALANCERS

A. High Performance, Bronze Body, Y-Pattern with brass readout valves with integral self-sealing EPT readout valves.

1. Iron body is not acceptable for sizes above 2”. Stainless steel body and components is acceptable. Balancers must be suitable for use with deionized water.

B. Valve shall be multi-turn globe style with calibrated digital hand wheel capable of at least four turns with graduations at $1/10^{th}$ turn. Hand wheel shall be equipped with a positive, tamper-resistant memory stop that effectively prevents opening valve past the stop.

C. Valve shall be capable of bubble-tight shutoff thus eliminating the need for a second shut off valve to facilitate equipment service.

D. Valve shall be provided with an integral, positive, tamper-resistant memory stop feature which is not subject to accidental readjustment when the valves is operated as a shut-off for service purposes. Memory stop shall require a tool for adjustment.

E. Valve shall have provisions for a seal to prevent re-setting.

F. Valve shall exhibit an accuracy of +/- 5% within its normal operation flow range.

G. Valves shall be rated for a maximum temperature of 230°F and a maximum pressure of 250 psig.

H. Valves shall be manufactured from Bronze or Dezincifcation resistant brass in sizes through 2” nominal, and bronze or cast iron in sizes above 2” nominal.

I. For chilled water applications, valve shall be provided with preformed insulation to permit access for balance and readout.

J. Mechanical Contractor shall supply Testing and Balancing Contractor with flow calculator (circular slide rule, etc.), if requested.

K. Balance valve sizes shall be based upon gpm range rather than pipe size.

1. Design Equipment: Tour & Anderson.

2. Manufacturers: MMA, Macon, Tour & Anderson.

L. 5 in. and Larger: Nickel-plated flow meter with provisions for connecting a portable differential pressure meter. Shall be individually calibrated. Provide with a butterfly valve with memory stop at each location.

1. Flow meter size shall be based upon manufacturer's recommended gpm range rather than pipe size.

2. Design Equipment: Tour & Anderson.

3. Manufacturers: MMA, Macon, Tour & Anderson.

2.3 STRAINERS

A. Cast semi-steel body or cast iron construction for steel piping and bronze body construction for copper piping; equipped with removable, monel or stainless steel water screen; maximum pressure drop 2 psi with free area at least four times area of pipe. Provided with blow-off outlet.

B. Sizes 5 in. and Smaller, Y-Pattern Strainer: 125 psig working pressure; flanged ends for NPS 2-1/2 in. and larger, threaded connections for NPS 2 in. and smaller, bolted cover, perforated stainless steel basket and bottom drain connection.

C. Sizes 6 in. and Larger, Basket Strainer: 125 psig working pressure; flanged end connections, bolted cover, perforated stainless steel basket and bottom drain connection.

D. Design Equipment: Mueller.

E. Manufacturers: Elliott, Keckley, Mueller, Webster, Watts, Spirax-Sarco.

2.4 AIR VENTS

A. Manual air vents shall be a 3/4 in. ball valve with bronze body, nickel plated bronze ball, hose end, cap and chain, Watts B6000CC.

B. Automatic air vents shall be float type, 35 psig rated, Armstrong No. 502CV OR float type, 150 psig rated, Armstrong No. 75 or Spirotop. Provide unit with an appropriate rating, as necessary for location.

C. High Capacity Automatic Air Vent:

1. Cast iron body. 150 psig rated. Stainless steel float.

D. Mason-Mercer.

2.5 PRESSURE/TEMPERATURE TEST PLUGS

A. 1/4 in. NPT plug shall be capable of reading either a pressure or temperature. 1/8 in. o.d. dual seal core of Nordel 275°F with zero leakage from vacuum to 500 psig.

B. Pressure / temperature test ports shall be provided on each coil bank, heat exchanger, fan coil, and at all permanent pressure gauge locations. Use extended body style to allow for insulation thickness. Seals shall be appropriate for operating water temperature and pressure as follows:

1. Hot water, Glycol - Nordel (EPDM) seat.

2. Chilled water, Cold water - Neoprene seat.

C. Makes: Peterson Equipment Company, Sisco P/T plugs.

PART 3 - EXECUTION

3.1 GENERAL REQUIREMENTS

A. Obtain detailed instructions from each manufacturer for proper method of installation.

3.2 SYSTEM FILLING

A. After cleaning, fill each system from low point.

B. With pumps off, vent mains, risers, run-outs, and units, working consecutively from low to high point of building. Obtain approximately 2 psi at highest point. Obtain proper air cushion in compression/expansion tanks.

3.3 AIR VENTING

A. Provide where specifically called for in piping details and at all points in piping systems where air may collect due to changes in piping elevation.

1. Manual air vent assembly consisting of 1-1/4 in. x 4 in. air collection chamber with 3/4 in. hose end ball valve with cap and chain.

2. Automatic air vent with a ball valve for the purpose of isolation and service or replacement.

3. Unless otherwise indicated, automatic air vents shall only be installed in Mechanical Rooms. Pipe high capacity air vent discharge down to floor.

B. Equipment Vents:

1. When equipment is above mains: Connect run-outs or risers to upper quadrant or top of mains. Install vent assembly concealed within enclosure, consisting of 1 in. diameter by 4 in. to 6 in. long air collection chamber with 1/4 in. soft copper tube to manual valve. Mount securely near bottom of enclosure, but not fastened to enclosure. For individual units, radiators, fan convectors and units with return grilled: Provide screwdriver operated manual valve, operated from discharge grille or access door. Drill enclosure and position valve for operating without removing enclosure.

2. When equipment is below mains: Connect piping run-outs or risers to bottom or lower quadrant of mains. Vent assembly not required in unit. Provide means of purging and draining each unit if required. Use tees instead of ells at low point of run-outs.

3.4 STRAINERS

A. Install strainers on supply side of each control valve, pressure reducing valve, solenoid valve, in-line pump and elsewhere as indicated. Install NPS 3/4 in. nipple and ball valve in blowdown connection of strainers NPS 2 in. and larger. Match size of strainer blowoff connection for strainers smaller than NPS 2 in.

3.5 FLOW BALANCERS

A. Where flow balancers are smaller than pipe line size, provide reducers directly adjacent to flow balancers.

B. Provide on each hydronic unit and where called for. Meter connection points shall not point downward.

3.6 TEST PLUG

A. Provide test plugs at locations as called for.

END OF SECTION 23 21 10

This page intentionally left blank.

SECTION 23 82 19 - FAN COIL UNITS

PART 1 - GENERAL

1.1 WORK INCLUDED

A. Provide labor, materials, equipment and services as required for the complete installation shown on Contract Drawings.

B. Refer to Contract Drawings for equipment pre-purchased and furnished by owner. The installing contractor shall take possession of this equipment and all furnished accessories, take delivery, and install the equipment as per the contract documents.

1.2 SUBMITTALS

A. Submit of all owner pre-purchased and furnished equipment will be made available to the installing contractor.

PART 2 - PRODUCTS

PART 3 - EXECUTION

3.1 GENERAL

A. Left hand or right hand piping connections for supply and return. Obtain complete instructions from unit manufacturer regarding each item and proper installation of same. Adjust motor speed.

3.2 INSTALLATION

A. In accordance with manufacturer's recommendations. Install piping within valve compartment to allow for pipe insulation. Provide drain piping. Vacuum clean inside of unit prior to operating units. Provide flexible duct connections at supply and return connections to ceiling units. For recessed and ceiling units, coordinate location of valves, fittings, filters, with access panels, to allow for convenient service of components. Install remote speed switch for recess and ceiling units. Provide wiring.

END OF SECTION 23 82 19

This page intentionally left blank.

SECTION 26 05 00 - BASIC ELECTRICAL REQUIREMENTS

PART 1 - GENERAL

1.1 ROUGHING

A. The Contract Drawings have been prepared in order to convey design intent and are diagrammatic only. Drawings shall not be interpreted to be fully coordinated for construction.

B. Due to small scale of Drawings, it is not possible to indicate all offsets, fittings, changes in elevation, interferences, etc. Make necessary changes in contract work, equipment locations, etc., as part of a contract to accommodate work to avoid obstacles and interferences encountered. Before installing, verify exact location and elevations at work site. **DO NOT SCALE** plans. If field conditions, details, changes in equipment or shop drawing information require an important rearrangement, report same to Owner's Representative for review. Obtain written approval for all major changes before installing.

C. Install work so that items both existing and new are operable and serviceable. Eliminate interference with removal of coils, motors, filters, belt guards and/or operation of doors. Provide easy, safe, and code mandated clearances at controllers, motor starters, valve access, and other equipment requiring maintenance and operation. Provide new materials, including new piping and insulation for relocated work.

D. Coordinate work with other trades and determine exact route or location of each duct, pipe, conduit, etc., before fabrication and installation. Coordinate with Architectural Drawings. Obtain from Owner's Representative exact location of all equipment in finished areas, such as thermostat, fixture, and switch mounting heights, and equipment mounting heights. Coordinate all work with the architectural reflected ceiling plans and/or existing Architecture. Mechanical and electrical drawings show design arrangement only for diffusers, grilles, registers, air terminals, lighting fixtures, sprinklers, speakers, and other items. Do not rough-in contract work without reflected ceiling location plans.

E. Before roughing for equipment furnished by Owner or in other Divisions, obtain from Owner and other Divisions, approved roughing drawings giving exact location for each piece of equipment. Do not "rough in" services without final layout drawings approved for construction. Cooperate with other trades to insure proper location and size of connections to insure proper functioning of all systems and equipment. For equipment and connections provided in this contract, prepare roughing drawing as follows:

1. Existing Equipment: Measure the existing equipment and prepare for installation in new location.

2. New Equipment: Obtain equipment roughing drawings and dimensions, then prepare roughing-in-drawings. If such information is not available in time, obtain an acknowledgement in writing, then make space arrangements as required with Owner's Representative.

1.2 EQUIPMENT AND MATERIAL REQUIREMENTS

A. Provide materials that meet the following minimum requirements:

1. Materials shall have a flame spread rating of 25 or less and a smoke developed rating of 50 or less, in accordance with NFPA 255.

2. All equipment and material for which there is a listing service shall bear a UL label.

3. Potable water systems and equipment shall be built according to AWWA Standards.

4. Gas-fired equipment and system shall meet AGA Regulations and shall have AGA label.

5. All electrical equipment and systems, as a whole, shall be tested and listed by an OSHA approved Nationally Recognized Testing Laboratory (NRTL) for the intended use in accordance with the applicable standards and have a physical label indicating such.

1.3 CONCEALMENT

A. **Conceal all contract work** above ceilings and in walls, below slabs, and elsewhere throughout building. If concealment is impossible or impractical, notify Owner's Representative before starting that part of the work and install only after their review. In areas with no ceilings, install only after Owner's Representative reviews and comments on arrangement and appearance.

1.4 CHASES

A. New Construction:

1. Certain chases, recesses, openings, shafts, and wall pockets will be provided as part of General Construction Trade. Mechanical and Electrical trades shall provide all other openings required for their contract work.

2. Check Architectural and Structural Design and Shop Drawings to verify correct size and location for all openings, recesses and chases in general building construction work.

3. Assume responsibility for correct and final location and size of such openings.

4. Rectify improperly sized, improperly located or omitted chases or openings due to faulty or late information or failure to check final location.

5. Provide 18 gauge galvanized sleeves and inserts. Extend all sleeves 2 in. above finished floor. Set sleeves and inserts in place ahead of new construction, securely fastened during concrete pouring. Correct, by drilling, omitted or improperly located sleeves. Assume responsibility for all work and equipment damaged during course of drilling. Firestop all unused sleeves.

6. Provide angle iron frame where openings are required for contract work, unless provided by General Construction trade.

B. In Existing Buildings:

1. Drill holes for floor and/or roof slab openings.

2. Multiple pipes smaller than 1 in. properly spaced and supported may pass through one 6 in. or smaller diameter opening.

3. Seal voids in fire rated assemblies with a fire-stopping seal system to maintain the fire resistance of the assembly. Provide 18 gauge galvanized sleeves at fire rated assemblies. Extend sleeves 2 in. above floors.

4. In wall openings, drill or cut holes to suit. Provide 18 gauge galvanized sleeves at shafts and fire rated assemblies. Provide fire-stopping seal between sleeves and wall in drywall construction. Provide fire stopping similar to that for floor openings.

1.5 PENETRATION FIRESTOPPING

A. Fire-Stopping for Openings Through Fire and Smoke Rated Wall and Floor Assemblies:

1. Provide materials and products listed or classified by an approved independent testing laboratory for "Penetration Fire-Stop Systems". The system shall meet the requirements of "Fire Tests of Penetrations Fire-Stops" designated ASTM E814.

2. Provide fire-stop system seals at all locations where piping, tubing, conduit, electrical busways/cables/wires, ductwork and similar utilities pass through or penetrate fire rated wall or floor assembly. Provide fire-stop seal between sleeve and wall for drywall construction.

3. The minimum required fire resistance ratings of the wall or floor assembly shall be maintained by the fire-stop system. The installation shall provide an air and watertight seal.

4. The methods used shall incorporate qualities which permit the easy removal or addition of electrical conduits or cables without drilling or use of special tools. The product shall adhere to itself to allow repairs to be made with the same material and permit the vibration, expansion, and/or contraction of any items passing through the penetration without cracking, crumbling and resulting reduction in fire rating.

5. Plastic pipe/conduit materials shall be installed utilizing intumescent collars.

6. Provide a submittal including products intended for use, manufacturer's installation instructions, and the UL details for all applicable types of wall and floor penetrations.

7. Fire-stopping products shall not be used for sealing of penetrations of non-rated walls or floors.

B. Acceptable Manufacturers:

1. Dow Corning Fire-Stop System Foams and Sealants.

2. Nelson Electric Fire-Stop System Putty, CLK and WRP.

3. S-100 FS500/600, Thomas & Betts.

4. Carborundum Fyre Putty.

5. 3-M Fire Products.

6. Hilti Corporation.

1.6 ACCESS PANELS

A. Provide access panels for required access to respective trade's work. Location and size shall be the responsibility of each trade. Access panels provided for equipment shall provide an opening not smaller than 22 in. by 22 in. Panels shall be capable of opening a minimum of 90 degrees. Bear cost of construction changes necessary due to improper information or failure to provide proper information in ample time. Access panels over 324 square inches shall have two cam locks. Provide proper frame and door type for various wall or ceiling finishes. Access panels shall be equal to "Milcor" as manufactured by Inland Steel Products Co., Milwaukee, Wisconsin. Provide General Construction trade with a set of architectural plans with size and locations of access panels.

1.7 CONCRETE BASES

A. Provide concrete bases for all floor mounted equipment. Provide 3,000 lb. concrete, chamfer edges, trowel finish, and securely bond to floor by roughening slab and coating with cement grout. Bases 4 in. high (unless otherwise indicated); shape and size to accommodate equipment. Provide anchor bolts in equipment bases for all equipment provided for the project, whether mounted on new concrete bases or existing concrete bases.

1.8 HVAC EQUIPMENT CONNECTIONS

A. Contractor is responsible for draining, filling, venting, chemically treating and restarting any systems which are affected by work shown on the Contract Documents unless specifically noted otherwise.

B. Provide final connections to all equipment as required by the equipment. Provide final connections, including domestic water piping, wiring, controls, and devices from equipment to outlets left by other trades. Provide equipment waste, drip, overflow and drain connections extended to floor drains.

C. Provide for Owner furnished and Contractor furnished equipment all valves, piping, piping accessories, traps, pressure reducing valves, gauges, relief valves, vents, drains, insulation, sheet metal work, controls, dampers, as required.

D. Refer to manufacturer drawings and specifications for requirements of laboratory equipment and special equipment. Verify connection requirements before bidding.

1.9 PLUMBING EQUIPMENT CONNECTIONS

A. Contractor is responsible for draining, filling, venting, chemically treating and restarting any systems which are affected by work shown on the Contract Documents unless specifically noted otherwise.

B. Provide roughing and final connections to all equipment. Provide loose key stops, sanitary "P" traps, tailpiece, adapters, gas or air cocks, and all necessary piping and fittings from roughing point to equipment. Provide installation of sinks, faucets, traps, tailpiece furnished by others. Provide cold water line with gate valve and backflow prevention device at locations called for. Provide continuation of piping and connection to equipment that is furnished by others. Provide relief valve discharge piping from equipment relief valves.

C. Provide valved water outlet adjacent to equipment requiring same. Provide equipment type floor drains, or drain hubs, adjacent to equipment.

D. Install controls and devices furnished by others.

E. Refer to Contract Documents for roughing schedules, and equipment and lists indicating scope of connections required.

F. Provide for Owner furnished and Contractor furnished equipment all valves, piping, piping accessories, traps, pressure reducing valves, gauges, relief valves, vents, drains, as required.

G. Refer to Manufacturer drawings and specifications for requirements of laboratory equipment and special equipment. Verify connection requirements before bidding.

1.10 ELECTRICAL EQUIPMENT CONNECTIONS

A. Provide complete power connections to all electrical equipment. Provide control connections to equipment. Heavy duty NEC rated disconnect ahead of each piece of equipment. Ground all equipment in accordance with NEC.

B. Provide for Owner furnished and Contractor furnished equipment all power wiring, electric equipment, control wiring, switches, lights, receptacles, and connections as required.

C. Refer to Manufacturer's drawings/specifications for requirements of laboratory equipment and special equipment. Verify connection requirements before bidding.

END OF SECTION 26 05 00

SECTION 26 05 01 - BASIC MATERIALS AND METHODS

PART 1 - GENERAL

1.1 DESCRIPTION

A. The drawings are diagrammatic, unless detailed dimensioned drawings are included, and show only approximate locations of equipment, fixtures, panelboards, conduits, and wiring devices. Exact locations are subject to the approval of the Owner's Representative. The general run of electrical feeders, branch circuits, and conduits, indicated on the drawings, is not intended to be the exact routing. Exact routings of conduit shall suit the job conditions.

B. Circuit designations, in the form of "Home Runs" on branches, indicate the designation of the branch circuit, the size and the quantity of branch circuit conductors, and the panel board or interconnection box from which the branch circuit is served.

C. Make measurements at the site and in the building during construction for all systems installed as the work progresses in such a manner that the equipment, piping, vents, ducts, conduit, and boxes will fit in the space available. Maintain headroom and if in unfinished areas, be as neatly installed, as obscure and "out-of-the-way" as physically possible. Where more than one trade is involved in an area, space or chase, all shall cooperate and install their own work to utilize the space equally between them in proportion to their individual requirements. In general, ductwork shall be given preference except where grading of piping becomes a problem, followed by piping then electrical wiring. If, after installation of any equipment, piping, ducts, conduit, and boxes, it is determined that ample maintenance and passage space has not been provided, rearrange work and /or furnish other equipment as required for ample maintenance space.

D. Any changes in the size or location of the material or equipment supplied, which may be necessary in order to meet field conditions or in order to avoid conflicts between trades, shall be brought to the immediate attention of the Owner's Representative and approval received before such alterations are made.

1.2 QUALITY ASSURANCE

A. Electric equipment shall be installed in a neat and workmanlike manner. All methods of construction, details of workmanship, that are not specifically described or indicated in the contract documents, shall be subject to the control and approval of the Owner's Representative.

B. Equipment and materials shall be of the quality and manufacture indicated in their respective sections of the specifications. The equipment specified is based upon the acceptable manufacturers listed. Equipment types, device ratings, dimensions, etc., correspond to the nomenclature dictated by those manufacturers. Where "or equal" is stated, equipment shall be equal in every way to that of the equipment specified and subject to approval.

All equipment shall be tested at the factory. Unless specified elsewhere, standard factory inspection and operational tests will be acceptable.

1.3 SUBMITTALS

A. Submit product data for the following equipment, materials and products, including all fittings and accessories:

1. Conduit
2. Surface Raceway
3. Expansion Fittings
4. Cable Tray
5. Channel Support Systems
6. Conductors
7. Cables
8. Cable Termination and Splice Kits
9. Poke-Through Service Fittings
10. Terminal and Equipment Cabinets
11. Floor Boxes
12. Wiring Devices Including Dimmers
13. Telephone/Data Communication Outlets
14. Television Outlets
15. Extension Cord Reels
16. Clocks
17. Flashing, Sealing, Firestopping Materials
18. Salvageable Materials
19. Testing reports prior to energizing equipment and materials.

1.4 SALVAGEABLE MATERIALS

A. Salvageable materials will be reviewed and identified by the Owner. Items selected by the Owner shall be delivered to a selected location on the Owner's property by this contract in an equal condition to prior this work.

B. Items normally accepted as salvage by the Owner:

1. Transformers
2. Meters, meter sockets and test switches
3. Deadfront switchgear
4. Panelboards and covers
5. Circuit breakers
6. Disconnects (100 AMP and up)
7. Bus duct and apparatus
8. Adjustable speed drives
9. Motor starters
10. Luminaires
11. Fire alarm equipment
12. Nurse call and intercom
13. Motors above 1/2 HP and up

14. Environmental and automation control equipment
15. Telephones
16. Central clock system

PART 2 - PRODUCTS

2.1 MATERIALS

A. Conduit, Raceway and Tubing:

1. Rigid Metal Conduit (RMC) shall be hot-dipped galvanized or electro-galvanized steel, UL listed "rigid metal conduit."

   a. Acceptable Manufacturers:

      1) Republic Conduit
      2) Allied Tube and Conduit
      3) Wheatland Tube
      4) Approved equal

2. Electrical Metallic Tubing (EMT) shall be electro-galvanized steel with corrosion resistant zinc coating; UL listed.

   a. Acceptable Manufacturers:

      1) Republic Conduit
      2) Allied Tube and Conduit
      3) Wheatland Tube
      4) Approved equal

3. Aluminum Conduit shall be rigid, heavy wall aluminum, UL listed "rigid metal conduit."

   a. Acceptable Manufacturers:

      1) Republic Conduit
      2) Allied Tube and Conduit

4. Flexible Metal Conduit (FMC) shall be constructed of one continuous length of electro-galvanized, spirally wound steel strip with interlocking convolutions and interior surfaces free from burrs and sharp edges. Shall be UL listed "flexible metal conduit" or "liquidtight flexible metal conduit" as required.

   a. Acceptable Manufacturers:

      1) Republic Conduit
      2) Allied Tube and Conduit
      3) Wheatland Tube
      4) AFC (American Flexible Conduit) Cable Systems

5. Rigid Non-Metallic Conduit (Schedule 40 for concrete encasement, Schedule 80 for direct burial or where exposed) shall be UL listed "rigid non-metallic conduit" for application in underground, encased, and exposed applications in accordance with the NEC". The conduit shall be made from polyvinyl chloride (PVC) and shall be rated for 90ºC conductors. Conduit and fittings shall be tested in accordance with the testing requirements defined in NEMA TC-2, NEMA TC-3, UL-651, and UL-514

   a. Acceptable Manufacturers:

      1) Carlon
      2) Heritage Plastics
      3) PW Eagle

6. PVC Coated Rigid Metal Conduit, prior to coating shall conform to the specifications for Rigid Metal Conduit, above. The conduit shall have hot dipped galvanized threads, and the threads and the inside of the conduit shall be urethane coated. The exterior of the conduit shall be PVC coated to a minimum thickness of 40 mils. All coated conduit shall conform to NEMA standard RN01. The conduit shall be bendable without damage to the interior or exterior coatings. All fittings and couplings shall be PVC coated to a minimum thickness of 40 mils on the exterior, and the interior and threads shall be urethane coated. All screws shall be stainless steel. The installed conduit system shall provide a continuous grounding path.

   a. Acceptable Manufacturers:

      1) Robroy Industries
      2) Ocal Incorporated
      3) Perma-Cote
      4) Approved Equal

7. Surface Metal Raceway shall be .040 in. steel UL listed "Surface Metal Raceway". Use manufacturer's standard fittings designed to be used with the specific raceway.

   a. One-Piece Raceway:

      1) Finish per architect.

      2) Acceptable Manufacturers:

         a) Wiremold "700" Series (Design Make)
         b) Mono Systems
         c) Approved equal

b. Two-Piece Raceways:

1) Finish per architect.

2) Duplex or special receptacles as specified in wiring devices.

3) Corners, turns, tees and elbows shall have suitable turning radius for the intended cable.

4) Provide divider in raceways utilized for power and communications. Utilize wire/cable clips 18 in. on center to hold in the conductors/cables.

5) Utilize rounded head screws/bolts for mounting.

6) Acceptable Manufacturers:

a) Wiremold 6000 (Design Make)
b) Mono Systems
c) Approved equal

8. Electrical Non-Metallic Tubing (ENT) for installation in accordance with the National Electrical Code, other applicable sections of the Code, and local codes.

a. Any ENT used shall meet the requirements of NEMA TC-13 and shall be listed by Underwriters Laboratories, Inc., as suitable for its intended purpose.

b. ENT shall be recognized by a CABO National Evaluation Report for use in one (1) hour and two (2) hour rated construction.

c. Penetration of fire rated walls, floors, or ceilings, shall use classified Through-Penetration Firestop Systems described in the current Underwriters Laboratories Building Materials Directory.

d. Fittings and outlet boxes shall be designed for use with ENT and listed by Underwriters Laboratories. All fittings, boxes, and accessories shall be from one manufacturer.

e. Only cement recommended specifically for use with the brand of ENT used shall be used.

f. Unless indicated differently on drawings, ENT systems shall be color coded BLUE for brand and feeder circuit wiring, ORANGE and YELLOW for communications, and RED for fire alarm and emergency systems.

g. Acceptable Manufacturers:

1) Carlon
2) Heritage Plastics
3) Approved equal

B. Conduit Fittings:

1. Fittings for rigid metal conduit shall be fully threaded and shall be of the same material as the respective raceway system. Fittings for electrical metallic tubing shall be single screw indenter fittings for conduits up to 2 in. and double screw indenter fittings for conduits 2 in. and larger. Connectors shall also have insulated throat or plastic insulating bushing up to and including 1 in. size. For sizes 1-1/4 in. and larger, provide plastic insulating bushing. Die-cast, pressure cast fittings shall not be used. Fittings for rigid non-metallic conduit shall be solvent cemented in accordance with the manufacturer's instructions.

a. Acceptable Manufacturers:

1) O.Z. Gedney
2) Steel City
3) Thomas & Betts
4) Crouse-Hinds
5) Carlon

2. Expansion Fittings shall be watertight, combination expansion and deflection type designed to compensate for movement in any direction. Fittings shall have flexible copper braid bonding jumpers, neoprene sleeve and stainless steel bands, use aluminum body fittings for rigid aluminum conduit.

a. Acceptable Manufacturers:

1) Crouse-Hinds, Type "XD"
2) O.Z./Gedney, Type "DX"
3) Approved equal

3. Explosion-proof conduit sealing fittings shall be threaded, cast iron alloy construction with integral bushings. Seal with "A" sealing compound after wiring installation. The fittings shall be UL Listed for Class I, Division 1 and 2, Groups B, C, D; Class II, Division 1 and 2, Groups E, F, G; Class III.

a. Acceptable Manufacturer's:

1) Crouse-Hinds EYS Series
2) Emerson/O.S./Gedney EYS Series
3) Emerson/Appleton EYS Series

C. Wireway, Wire Trough, and Auxiliary Gutters:

1. Wireway and Wire Trough shall be hinged cover type wireway with provisions for full lay-in along the entire length of run. Wireway shall be steel, enclosed with gray enamel finish. Provide NEMA 1 units for interior/dry/clean locations and NEMA 12 for interior dry maintenance/shop/utility locations. Size to meet NEC fill requirements or larger as noted on Contract Documents.

   Provide knockouts along runs. Recess in wall where required for flush mounted equipment. Hinge shall be on the bottom of front face for horizontal mounting. Provide all covers, couplings, offsets, elbows, expansion joints, adapters, hold down straps, end caps, tees, pullboxes, hangers, reducers, supports, and other fittings to match and mate with wireways as required for complete system.

   a. Acceptable Manufacturers:

      1) Square D "Square Duct"
      2) General Electric
      3) Hoffman
      4) Meco

D. Cable Trays:

1. Solid Bottom Cable Trays shall be aluminum construction, including accessories. One-piece construction bottom and side, sheet aluminum 080 ±5%. Aluminum alloy side rails and bottom channel with flanges in standard lengths 12 ft. - 0 in. long. Wrap around type bolted connector to connect tray sections. Cover required where indicated on Contract Documents and in all areas used as return air plenums. Use three-piece construction, consisting of a solid corrugated bottom welded to the side rails. Provide divider strip where noted on Contract Documents. Minimum inside radius of horizontal elbows shall be 12 in. Provide special radius elbows where required for field conditions. Horizontal and vertical bends for solid bottom trays shall have solid bottoms. Loading data:

Tray Width	Load Depth	Usable NEMA Depth	Standard	Span	Lbs. Per Feet	Deflection
12 in.	4 in.	3 in.	12B	10 ft.	115	0.15 in.
18 in.	4 in.	3 in.	12B	10 ft.	115	0.015 in.
18 in.	6 in.	3 in.	12C	10 ft.	144	0.15 in.

   a. Provide a safety-loading factor of 1.5 for uniformly distributed loads when supported as a simple span in accordance with the NEMA standard listed.

   b. Acceptable Manufacturers:

      1) P-W

2) B-Line Systems
3) Chalfant
4) Globe

E. Strut-Type Channel Raceways and Fittings:

1. Strut-Type Channel Raceways and Fittings shall be provided for racking of conduit, trapeze suspensions, equipment support, cable racks and panel racks. Channel shall be steel with electroplated zinc finish for interior dry locations. Provide necessary accessories such as bolts, screws, anchors, connection plates, and straps as required to perform the necessary functions. Wet location and exterior channel support systems shall be steel with hot dipped galvanized finish and stainless steel hardware as a minimum. Cut ends shall be touched up with suitable matching finish. Provide poured-in-place inserts for supporting channels at poured concrete walls and ceilings.

a. Acceptable Manufacturers:

1) Unistrut
2) Globe
3) Kindorf
4) B-Line

F. Low Voltage (600V or less) Conductors and Cables:

1. Conductors shall be insulated for 600 volts, unless otherwise noted, and shall be standard AWG and kcmil sizes. Conductors shall be 98% copper, thermal plastic or cross-linked polymer insulated, heat and moisture resistant. Conductors shall be stranded, except for conductors used for fire alarm system wiring. Conductor sizes No. 18 AWG and smaller shall be a solid single strand; No. 16 AWG and larger shall be multiple stranded. Minimum conductor size shall be #12 AWG except smaller sizes may be used for communications and special systems. Conductor sizes shall be as called for. Conductors shall be labeled with UL seal and be marked with the manufacturer's name, wire size and insulation type. Insulation for all 600 volt conductors shall be Type THHN/THWN-2 or Type XHHW-2, unless otherwise noted. All exterior and underground conductors shall be XHHW-2. Luminaire fixture wire shall conform to the latest Underwriters Laboratories requirements.

Flexible cords and cables for general portable use shall be Type SO or SOOW or as noted. Cables for special use shall be of the type specified for the application.

a. Color Coding:

1) All circuits shall be color coded according to the following schedule.

	Three Phase 120/208V	**Three Phase 277/480V**
Ground	Green	Green
Neutral	White	Gray
A or L1	Black	Brown
B or L2	Red	Orange
C or L3	Blue	Yellow
Isolated EG	Green w/Yellow Tracer	Green w/Yellow Tracer

b. Acceptable Manufacturers:

1) General Cable (Brand of Prysmian Group)
2) Prysmian
3) South Wire
4) Okonite
5) Senator

2. Mineral Insulated (MI) Cable:

a. Cable shall be a manufactured system rated for two (2) hour fire rating minimum and be NRTL tested for such. System shall be rated 600V, continuous 90°C minimum and have a main copper conductor, magnesium oxide insulating material and outer soft drawn copper sheath. Jacket of low smoke material with conductor size and rating markings labeled.

b. Utilize manufacturer termination kits for entry into boxes, panelboards, etc. Maximum of 6 ft. distance between cable supports and secured to fire rated building structure. Manufacturer installation instructions/recommendations shall be strictly followed. Provide phasing color coding utilizing tape at each enclosure, box and junction.

c. Acceptable Manufacturers:

1) Pyrotenax
2) Approved equal

3. Terminal Lugs and Connectors:

a. The lug shall be capable of continuous operation at the current rating of the cable it is used on. The lug shall be UL listed per UL 486A, using industry standard crimping tools and dies. Terminal lugs shall be solderless, pressure type with UL label for "CU/AL" conductor terminations.

The lug shall be a closed-end compression (crimp) type, constructed of seamless, alloy suitable for copper and/or aluminum conductors to match the conductor. The lug shall be made with a chamfered inside end, for ease of conductor insertion. Both one and two hole lugs shall be NEMA sized for standard stud sizes and spacing. The lug shall be designed for use at the system voltage.

1) Acceptable Manufacturers:

a) 3M Scotchlok 30,000 and 31,000 Series
b) Burndy
c) O.Z./Gedney
d) Thomas and Betts

b. The conductor connection shall be capable of continuous operation at the current rating of the cables it is used on. The connection shall be UL listed per UL 486A, using industry standard crimping tools and ides. The connector shall be an inline compression (crimp) type, constructed of seamless, tin-plated copper. The connector shall be constructed with chamfered inside-ends and with center cable stops. The connector shall be designed for use at the system voltage.

1) Acceptable Manufacturers:

a) 3M Scotchlok 10,000 and 11,000 Series
b) Burndy
c) O.Z./Gedney
d) Thomas and Betts

c. "Split-bolt" Connectors shall be solderless type.

1) Acceptable Manufacturers:

a) Burndy
b) Kearney
c) O.Z./Gedney
d) Thomas and Betts
e) Anderson

d. "TWIST ON" Connectors shall be spiral steel spring type and insulated with vinyl cap and skirt.

1) Acceptable Manufacturers:

a) 3-M Company "Scotch-Lok"
b) Ideal "Wing-Nuts"
c) Approved equal

e. Aluminum joints shall utilize oxide inhibitors as recommended by the conductor manufacturer. Utilize pin type terminations where possible and coordinated with the clearances available. Provide insulating tape or insulating sealed cover for connectors/terminations.

G. Outlet Boxes, Device Boxes, Rings, and Covers:

1. Outlet Boxes having pryout openings, knockouts, threaded entries, or hubs in either the sides of the back, or both, for entrance of conduit or cable fittings, or cables, with provisions for mounting outlet box cover. Outlet boxes shall be galvanized steel, not less than 2-1/2 in. deep, unless restricted by the surroundings, 4 in. square or octagonal. Boxes and associated fittings, plates and devices shall be mechanically fastened (screwed), friction fitting is not acceptable.

Outlet boxes exposed to moisture, surface mounted, exterior, wet or damp locations shall be cadmium cast alloy complete with external threaded hubs and gasketed screw fastened covers. Minimum box size shall be as indicated in the NEC for the conductors and devices installed. Boxes shall be approved for the environmental condition where they will be installed.

2. Conduit bodies providing access to interior of conduit or tubing system through one or more removable covers at junction or terminal point and listed in accordance with outlet box requirements.

3. Extension ring intended to extend sides of outlet box or device box to increase box, volume, or both

a. Acceptable Manufacturers:

1) Steel City
2) Raco
3) Appleton
4) Crouse Hinds

4. Telephone/Data Communications Outlet Boxes:

   a. 4 in. x 4 in. outlet box with single gang plaster ring with cover plate suitable for indicated communications outlet and conduit routed to accessible ceiling space / accessible corridor ceiling space cable tray. Cover plate shall match the receptacle cover type.

5. Pull and junction boxes shall be constructed of not less than 14 gauge galvanized steel with trim for flush or surface mounting in accordance with the location to be installed. Provide screw-on type covers. Boxes installed in damp or wet locations shall be of raintight construction with gasketed cover and threaded conduit hubs. In no case shall boxes be sized smaller than as indicated NEC for conduit and conductor sizes installed. Boxes shall be approved for the environmental condition of the location where they will be installed.

   a. Acceptable Manufacturers:

      1) Hoffman
      2) Keystone
      3) Approved equal

6. Flush floor junction boxes shall be recessed cover boxes designed for flush mounting in masonry. Provide checkered plate gasketed cover suitable for foot traffic. Make: O.Z. Gedney Type YR or approved equal.

7. Corrosion Resistant Boxes:

   a. Provide corrosion resistant boxes for sewage pump stations, natatoriums, etc. and where indicated.

   b. Plastic Coated Outlet Boxes: threaded hub type, malleable iron boxes coated with 40mils thick polyvinylchloride coating, Ocal/T&B Ocal Blue System, PCD Corp. KorKap XL or Robroy Industry Plastibond or Perma-Cote.

   c. Nonmetallic Boxes: Glass fiber reinforced polyester, Carlon Himeline Series, Crouse-Hinds Krydon or Robroy Industry Stahlin.

8. Hazardous location conduit junction boxes shall be used in hazardous locations to provide for change in conduit direction, access to conductors, and as pull and splice boxes. They shall be copper free aluminum, with internally threaded bodies and cast in brackets on the cover. The boxes shall be UL Listed for Class I, Division 1 and 2, Groups B, C, D; Class II, Division 1 and 2, Groups E, F, G; Class III.

   a. Acceptable Manufacturers:

      1) Crouse-Hinds EGJ Series
      2) Emerson/O.Z./Gedney GUEB Series

3) Emerson/Appleton DER/GUB and GUBM Series

9. Flush Floor Boxes: Boxes shall be cast in place with height adjustability prior to pour. Provide power, communication and/or audio/visual outlets as indicated. Installation shall be suitable for the intended floor finish: if carpet, then provide a carpet flange, if tile/terrazzo/concrete finish, then provide a collar flush with finished floor and no flange. Units shall meet UL scrub water protected requirements. To have integral ground terminal.

a. Acceptable Manufacturers:

1) Acceptable manufactures shall include those called for in the Contract Documents.

10. Flush Poke-Through Service Fitting (Power/Communication):

a. Provide flush poke-through suitable for installation in a cored floor opening. Shall be complete with junction box, conduit and conduit adapter for transition from the floor box to movable partitions or with flush devices as indicated on plans. The complete assembly shall be suitable for two hour fire rated floors, be UL CEYY listed and have UL scrub water protected metallic color as selected by the Architect cover and trim ring. Cover shall be suitable for carpet, tile, wood and concrete. Unit protrusion above floor plane shall not exceed 0.2". Extend or reduce unit raceway length as needed to accommodate floor thickness and project conditions. Provide indicated devices in units.

b. Acceptable Manufacturers:

1) Acceptable manufactures shall include those called for in the Contract Documents.

H. Terminal and Equipment Cabinets:

1. Terminal and equipment cabinets shall be code gauge galvanized steel with removable endwalls. Fronts shall be of code gauge steel, flush or surface type (as indicated) with concealed trim clamps, concealed hinges, flush lock, and grey baked enamel finish. Boxes and front shall be UL listed and shall be minimum 35 in. H x 24 in. W x 6 in. D. Provide removable insulated plywood terminal board mounted on inside back wall of cabinet.

a. Acceptable Manufacturer:

1) Square D "Mono-Flat"
2) Approved equal

I. Wiring Devices:

1. Wiring Devices (toggle switches, key switches, receptacles, dimmers, occupancy sensors, etc.) shall be commercial grade as a minimum. Switch handle and receptacle face shall be as directed by the Architect. Receptacles connected to the emergency power system shall have a red colored face. Provide device cover plates of rounded nylon colored to match the device in finished areas and rounded raised (Steel City 450/460 series) only for surface mounted locations in unfinished areas. Provide neoprene gasketed cast aluminum/zinc box with hinged (for receptacle) rain tight cast aluminum/zinc lockable while in use cover with stainless steel hardware for devices designated "WP".

   a. Acceptable Manufacturers:

      1) Pass and Seymour
      2) Hubbell
      3) Leviton

2. Toggle/Snap Switches:

   a. Units shall be quiet operation, quick make/quick break, rated for 20A/120-277V/1hp at 120/277V, 90° rear plug in termination with pig tail, with nylon/polycarbonate toggle, self grounding mounting screw clip plate (not staple), ground terminal and silver alloy contacts. Units shall meet latest Federal Specification WS-896, NEMA WD-1 and UL Test 20. Single pole units shall be Hubbell HBL1221, P&S 20AC1 or Leviton 1221-2. Provide two pole, three way, four way, illuminated handle, keyed, etc. type of the same quality and model.

   b. Momentary Contact: Units shall be as indicated above (20A, 277V, nylon handle, side/back wired), three position, two circuit/three wire with spring return to center position, provide where indicated and as needed for proper system operation. Hubbell HBL 1557, P&S 1250, Leviton 1256 or approved equal. Provide keyed operation or pilot light where indicated. When used for lighting controls for vacancy sensor control, provide jumper across the circuit terminals.

3. Receptacles:

   a. Provide receptacles where indicated on the drawings and where called for. Provide type receptacle as indicated and if not indicated then utilize general receptacle.

   b. General Receptacle: Units shall be NEMA 5-20R, duplex, 20A, 125V, 90° rear plug in termination with pig tail with nylon face, indented brass contacts for three point connection, self grounding stainless steel mounting screw clip plate and green ground terminal.

Shall meet requirements of Federal Specification W-C-596, NEMA WD-6 and UL 498.

1) Units shall have 0.036" brass thick contacts, 0.05" thick brass mounting strap, and be: Hubbell HBL5362, P&S 5362A or Leviton 5362.

c. Ground Fault Interrupting Receptacles: Units shall be as specified above for General Receptacle and have 5mA interrupting ground fault level, test/reset front buttons, full through feed capability, power off on reverse wired sensing, 10kA short circuit current rating, be tamper/weather resistant and in compliance with UL 943. Unit shall self-test function to periodically test the components automatically and indicate a failure condition utilizing an LED. Shall be Hubbell GFR5362, P&S 2096TR or Leviton S7599TR.

d. Tamper Resistant Receptacles: Units shall be as specified above for General Receptacle and have protective shutters to prevent entry into the line or grounded front openings unless all plug prongs are present.

e. Surge Protected Receptacles: Units shall be as specified above for General Receptacle and have 240 joule energy/15,000A capacity, three modes of protection (line to neutral, line to ground and neutral to ground), 500V maximum clamping, LED indicator (operational, failure), blue color and UL 1449 compliant. Shall be Hubbell HBL5360SA, P&S 5352XSP or Leviton 5280.

f. Isolated Ground Receptacles: Units shall be as specified above for General Receptacle and have an orange color and electrically independent/isolated mounting strap and ground terminal. Shall be Hubbell IG5352, P&S IG5362 or Leviton 5362IG.

g. Surge Protected and Isolated Ground Receptacles: Units shall be as specified above for General Receptacle and the Surge Protected and Isolated Ground units above. The unit shall have an orange color.

h. Controlled Receptacle: To be utilized where a receptacle is automatically controlled. Units shall be as specified above for General Receptacle with suitable symbol on face. Shall be Hubbell DR20LA, P&S 26352CD or approved equal.

i. USB Power Receptacle: Units shall be as specified above for General Receptacle but have 0.040" zinc plated mounting strap, two 20A 125V outlets and two USB charging (5A minimum total, 5VDC, USB 2.0/3.0) outlets. Overall depth shall not exceed 1.7 in. Shall be Hubbell USB20 or approved equal.

j. Clock Receptacle: To be NEMA 5-15R single receptacle with hanger and stainless steel cover plate. Hubbell HBL 5235 or approved equal.

k. Special Receptacles: provide other type receptacles as indicated herein or on the drawings. Such receptacles shall be Hubbell, P&S or Leviton highest grade available.

4. Extension Cord Reels:

a. Ceiling mounted. Positive stop action at any length, ratchet lock, and automatic rewind spring. Provide heavy duty type with 20 ft. of #12/3 SJEO minimum cord terminating in molded high impact outlet box with wire mesh cord grip and P&S #5362A or HBL 5362 receptacle (brown), and spring close cover plate. Provide rigid mounting support to building structure.

b. Acceptable Manufacturers:

1) Hubbell HBL45123R20 (Design Make)
2) Woodhead
3) Appleton RL5000 Series

5. Time Switches:

a. Electromechanical Controllers:

1) DPST, 40A per pole at 277 volt: Tork 7202Z.

2) 3PST, 40A per pole at 277 volt: Tork 7302Z.

3) Two-circuit lighting control center: Tork T-920L.

4) Three-circuit lighting control center: Tork T-903-L.

b. Digital Time Switch (for use with Contactor):

1) SPDT, 7-day with 14 set points.

2) Digital, AM/PM Clock with LCD display.

3) Battery backup to keep program in memory for approximately seven (7) days.

4) 120V Make: Tork EW120 or equal.

5) 277 Make: Tork EW120-3 or equal.

c. Time switches shall be provided with NEMA 1 general purpose, surface mount enclosures unless otherwise noted.

6. Elapsed Time Switches:

   a. Mechanical spring wound timer, which requires no electricity to operate the timing mechanism. Device shall fit a standard 2-1/2 in. deep wall box. Switch contacts shall break current carrying contacts at the end of the timed cycle.

      1) 0-30 Minutes: Tork A530M or equal.
      2) 0-4 Hours: Tork A504HH or equal.
      3) 0-12 Hours: Mark Time or equal.

7. Emergency Shutdown Pushbutton:

   a. Where called for provide emergency shutdown/emergency power off push button. Unit shall be Square D Class 9001 Type K NEMA 13 oil tight pushbutton with the following:

      1) Red mushroom head 1-1/2 in. button, hinged protective flip up cover, push to operate, pull to reset.

      2) Maintained contact operation with one normally open and one normally closed 10A 120V contacts. Provide relay for additional contacts.

      3) Red pilot light.

      4) Engraved legend plate indicating "XX - Emergency Stop" with XX = the system name.

8. Cable Rack Assembly: Non-metallic. Components fabricated from nonconductive, fiberglass-reinforced polymer.

   a. Support Stanchions: Normal 36 in. high by 4 in. wide, with minimum of nine (9) holes for arm attachment.

   b. Arms: Arranged for secure, drop-in attachment in horizontal position at any location of cable stanchions, and capable of being locked in position. Arms shall be 12 in. minimum and rated for twice the intended weight as a minimum. Top of arm for cable support shall be nominally 4 in. wide, and arm shall have slots along full length for cable ties.

   c. Support shall have rounded corners and be securely fastened to the arm and cable fastened to it with tie wrap or other recommended method.

   d. Hardware: All hardware shall be stainless steel.

J. Flashing, Sealing, Fire-stopping:

1. Fire-Stopping for Openings Through Fire and Smoke Rated Wall and Floor Assemblies:

a. Provide materials and products listed or classified by an approved independent testing laboratory for "Through-Penetration Fire-Stop Systems". The system shall meet the requirements of "Fire Tests of Through-Penetration Fire-Stops" designated ASTM E814.

b. Provide fire-stop system seals at all locations where piping, tubing, conduit, electrical busways/cables/wires, ductwork and similar utilities pass through or penetrate fire rated wall or floor assembly. Provide fire-stop seal between sleeve and wall for drywall construction.

c. The minimum required fire resistance ratings of the wall or floor assembly shall be maintained by the fire-stop system. The installation shall provide an air and watertight seal.

d. The methods used shall incorporate qualities, which permit the easy removal or addition of electrical conduits or cables without drilling or use of special tools. The product shall adhere to itself to allow repairs to be made with the same material and permit the vibration, expansion and/or contraction of any items passing through the penetration without cracking, crumbling and resulting reduction in fire rating.

2. Acceptable Manufacturers:

a. Dow Corning Fire-Stop System Foams and Sealants
b. Nelson Electric Fire-Stop System Putty, CLK and WRP
c. S-100 FS500/600, Thomas & Betts
d. Carborundum Fyre Putty
e. 3-M Fire Products

PART 3 - EXECUTION

3.1 INSTALLATION

A. Comply with NECA NEIS (National Electrical Installation Standard) latest edition.

B. Unless otherwise noted, wiring for all systems indicated in the contract documents shall consist of insulated conductors installed in raceways. Raceways shall be continuous from outlet box to outlet box and from outlet box to cabinet, junction or pull box. Secure and bond raceways to all boxes and cabinets so that each system of raceways is electrically continuous throughout. Unless otherwise indicated on the drawings, install all wiring in the following raceway system:

1. Wiring 600 Volts or Less in Dry Locations: EMT.

2. Wiring 600 Volts or Less in Dry Locations and Subject to Physical Damage: RMC.

3. Wiring 600 Volts or Less in Outdoors, Above Grade Locations: RMC.

4. Wiring 600 Volts or Less Installed Below Grade, in Concrete Floor Slabs or Below Ground Floor Slab: PVC-40 encased in concrete with rigid metal conduit bends and penetrations through building floors and walls.

5. Wiring Installed in Hazardous Locations: Galvanized Rigid Metal Conduit.

6. Wiring Installed in Corrosive Locations: PVC-80, RMC-PVC**.**

7. Flexible metal conduit shall be used for final connection to all motors, final connection to rotating or vibrating equipment, final connections to dry type transformers and final connections to recessed lighting fixtures. Liquidtight flexible conduit shall be used in all wet or damp locations. Maximum length of flexible conduit shall be 36 in., except that from outlet boxes to lighting fixture maximum length shall be 6 ft. Provide green insulated equipment grounding conductor in all flexible metal conduit.

8. Surface metal raceway shall be used for surface runs in finished area where concealed conduit cannot be run or where specifically indicated on drawings.

C. Raceways:

1. Sized as indicated on the drawings. Where sizes are not indicated, raceways shall be sized as required by the National Electrical Code in accordance with the quantity, size, and type of the insulation conductors to be installed.

   Raceways shall be minimum 3/4 in. trade size for branch circuit wiring and minimum 1 in. trade size for all telephone, data, intercommunications, instrumentation, fire alarm, television and computer systems and for all branch circuit "Home Runs" to panelboards. Installed to provide adequate grounding between all outlets and the established electrical system ground.

2. Arranged in a neat manner for access and allow for access to work installed by other trades.

3. Install raceways square to the enclosure and terminate at enclosures without hubs with locknuts on both sides of enclosure wall. Install locknuts handtight, plus one-quarter turn more.

4. Terminate threaded conduits into threaded hubs or with locknuts on inside and outside of boxes or cabinets. Install bushings on conduits up to 1-1/4 inch trade size and insulated throat metal ground bushings on 1-1/2 inch trade size and larger conduits terminated with locknuts. Install throat metal grounding bushings on service conduit.

5. Complete raceway installation before starting conductor installation.

6. Provide stub-ups through floors with coupling threaded inside for plugs, set flush with finished floor. Plug coupling until conduit is extended above floor to final destination or a minimum of 2 feet above finished floor. Wherever a cluster of four (4) or more raceways rise out of floor exposed, provide neatly formed 6 in. high concrete envelop, with chamfered edges, around raceways.

7. Installed with a minimum of bends and offsets. All bends shall be made without kinking or destroying the cross section contour of the raceway. Factory made bends are acceptable and should be considered for raceways larger than 2 in.

8. Make bends in raceway using large-radius performed ells except for parallel bends. Field bending must be in accordance with NFPA 70 minimum radii requirements. Provide only equipment specifically designed for material and size involved.

9. Conceal conduit within finished walls, ceilings, and floors unless otherwise noted, or where permitted by the Owner's Representative. All exposed raceways shall be painted to match existing adjacent surface as directed by the Architect. Install conduit parallel or perpendicular to building lines.

10. Support conduit within 12 inches of enclosure to which attached.

11. Seal raceway opening that penetrate rooms or walls with acoustical requirements on both sides of rooms or walls with acoustically rated putty or firestopping.

12. Differing Temperatures: For raceways routed between areas with differing temperatures (interior to exterior, walk in coolers/freezers, environmental chambers, etc.) install raceway as follows:

    a. Provide a thermal break, 4 in. minimum of stainless steel [or Schedule 40 PVC] conduit within space wall/separation.

    b. Seal raceway penetration through the wall/separation.

    c. Provide a box on each side of the space wall/separation.

    d. Provide raceway interior sealant (duct seal or suitable foam) to provide a complete air barrier after conductors are installed.

    e. Mounting of raceway and boxes on equipment shall be coordinated and approved by the equipment manufacturer.

f. Installed with exterior surfaces not less than 6 in. from any surface with normal operating temperature of 200°F or higher.

13. Expansion-Joint Fittings:

a. Install in runs of aboveground PVC that are located where environmental temperature change may exceed 30 deg. F and that have straight-run length that exceeds 25 feet. Install in runs of aboveground RMC and EMT conduit that are located where environmental temperature change may exceed 100 deg. F and that have straight-run length that exceeds 100 feet.

b. Install expansion fittings at locations where conduits cross building or structure expansion joints.

c. Install with position, mounting, and piston setting selected in accordance with manufacturer's written instructions for conditions at specific location at time of installation. Install conduit supports to allow for expansion movement.

d. Installed such that no undue stress is placed on any electrical raceway due to the proper functioning of expansion joints.

14. Raceway installed in wet/damp locations or on exterior walls shall have a spacer manufactured for this purpose provided to maintain a space/void between the mounting surface and the raceway.

15. Do not install conduits within 2 inches of the bottom side of a metal deck roof.

16. Keep raceways at least 6 inches away from parallel runs of flues and steam or hot-water pipes. Install horizontal raceway runs above water and steam piping.

17. Cut conduit perpendicular to the length. For conduits 2 inch trade size and larger, use roll cutter or a guide to make cut straight and perpendicular to the length. Ream inside of conduit to remove burrs. Bush where necessary.

18. Install pull wires in empty raceways. Provide polypropylene or monofilament plastic line with not less than 200 lb tensile strength. Leave at least 12 inch of slack at both ends of pull wire. Cap underground raceways designated as spare above grade alongside raceways in use.

19. Plugged at the ends of each roughed-in raceway with an approved cap or disc to prevent the entrance of foreign materials during construction.

20. Installed with UL approved rain-tight and concrete-tight couplings and connectors.

21. Raceways shall not be attached to or supported by wooden plug anchors or supported from mechanical work such as ductwork, piping, etc.

22. Raceways installed in concrete slabs shall be located so as not to affect structural integrity of slab, and such that conduit shall have a minimum of 1 in. of concrete cover on all sides. Obtain approval from the Owner's Representative prior to installing conduit larger than 1 in. trade size in concrete slabs. Raceways in slabs shall be for floor box use only, or routing vertically through.

23. Raceways installed below ground floor slab shall be encased in concrete with 3 in. minimum coverage on all sides. Where possible, install conduit directly below slab with concrete envelope poured monolithic with slab. Where this is not possible, support raceways and envelop maximum 5 ft. - 0 in. on centers from underside of structural slab by means of galvanized pipe hangers. Pipe hangers shall be coated with asphalt mastic. Installation shall maintain integrity of waterproofing membrane.

24. If it is necessary to burn holes through webs of beams or girders, call such points to the attention of the Owner's Representative and receive written approval both as to location and size of hole before proceeding with work. All holes shall be burned no larger than absolutely necessary.

25. Become familiar with the general construction of the building and place sleeves, inserts, etc., as required. All penetrations through existing floors shall be core drilled and sleeved.

26. All raceways shall be supported adequately by malleable iron pipe clamps or other approved methods. In exterior or wet locations, supports shall allow not less than 1/4 in. air space between raceway and wall. Firmly fasten raceway within 3 ft. of each outlet box, junction box, cabinet or fitting. The following table lists maximum spacing between conditions, strength of supporting members, etc.

27. Furnish and install such supports at no additional cost to owner.

Conduit Trade Size	**Type of Run**	**Horizontal Spacing in Feet**	**Vertical Spacing in Feet**
1/2 in., 3/4 in.	Concealed	7	10
1 in., 1-1/4 in.	Concealed	8	10
1-1/2 in. and larger	Concealed	10	10
1/2 in., 3/4 in.	Exposed	5	7
1 in., 1-1/4 in.	Exposed	7	8
1-1/2 in. and larger	Exposed	10	10

28. Where raceways puncture roof, install pitch pockets as required in order that the roof warranty is maintained. Coordinate with representative of roofing material manufacturer.

29. At each flush mounted panelboard, terminal cabinet, control cabinet, etc., provide four (4) spare 3/4 in. raceways from panelboard, etc., to an area above the nearest accessible ceiling space. Make 90° turn above the ceiling, arranged for further continuation of raceway, and cap.

30. All interior conduit used for the following systems shall be color coded as follows:

    a. Red - Fire Alarm System

    b. Metallic (silver/grey) - Normal utility power

    c. Yellow - Emergency Life Safety Branch

    d. Purple - Emergency Optional Standby

D. Cable Trays:

1. Tray supports shall be hung using threaded, galvanized rod hangers, with rods extended through support steel and double nutted. Size support member within load rating of member section; and without visible deflection. Install cable tray level and straight.

2. Provide aluminum body expansion connectors at building expansion joints. Minimum 4 in. movements, greater if expansion movement conditions warrant. Provide aluminum body expansion connectors every 100 ft. for outdoor installations. Minimum 4 in. movement, greater if expansion movement conditions warrant.

3. Provide external grounding strap at expansion joints, crossovers and at other locations where tray continuity is interrupted.

4. Provide necessary elbows, tees, crosses, risers, offsets, fittings, reducers, connectors, clamps, rod suspension, trapeze hangers, etc., as required to make a complete job, coordinate with the manufacturer.

5. Provide conduit to tray fitting at each conduit entrance to tray.

6. Install divider in trays as called for.

7. Install fire stop wall frames around cable tray at penetrations through fire rated walls, and where called for. Seal these openings with pliable fire resistant sealant.

E. Outlet Boxes:

1. Consider location of outlets shown on drawings as approximate only. Study architectural, process piping, mechanical, plumbing, structural, roughing-in, etc., drawings and note surrounding areas in which each outlet is to be located.

Locate outlet so that when fixtures, motors, cabinets, equipment, etc., are placed in position, outlet will serve its desired purpose.

Where conflicts are noted between drawings, contact Owner's Representative for decision prior to installation. Comply with the NEC relative to position of outlet boxes in finished ceilings and walls.

2. Prior to installation, relocate any outlet location a distance of 5 ft. in any direction from location indicated on drawings if so directed by the Owner's Representative. Prior to completion of wall construction, adjust vertical height of any outlet from height indicated if so directed by Owner's Representative. The above modifications shall be made at no additional cost to the Owner.

3. Provide boxes in wiring and raceway systems wherever required for pulling of wires, making connections, and mounting of devices or fixtures. Outlet boxes shall be sized to accommodate the wiring, splices and device(s) to be installed in accordance with the NEC.

4. Saw-cut opening for boxes recessed in masonry walls in center of cell of masonry block, and install box flush with surface of wall. Box shall have extra-deep type raised tile covers or shall be 3-1/2 in. deep boxes with square corners and dimensions to accommodate conductors installed. Prepare block surfaces to provide a flat surface for a raintight connection between box and coverplate or supported equipment and box, whether installed indoors or outdoors.

5. Horizontally separate boxes mounted on opposite sides of walls so they are not in the same vertical channel.

6. Locate boxes so that cover or plate will not span different building finishes. Install a device cover plate over each and every outlet indicated on drawings. Do not install plates until painting, cleaning and finishing of surfaces surrounding the outlet are complete. Install single one-piece multi-gang covers over multi-gang devices.

7. Where outlets at different mounting heights are indicated on drawings adjacent to each other (due to lack of physical space to show symbol on drawings), install outlets on a common vertical line.

8. Where switch outlets are shown adjacent to strike side of door, locate edge of outlet box approximately 3 in. from door frame.

9. Support boxes in recessed ceilings independent of ceiling tiles and ceiling grid.

10. Support boxes of three gangs or more from more than one side by spanning two framing members or mounting on brackets specifically designed for purpose.

11. Fasten junction and pull boxes to, or support from, building structure. Do not support boxes by conduits.

12. Floor outlet boxes shall be installed flush with finished floor, adjust level and tile as required. Where finished floor is terrazzo, provide boxes specifically designed for installation in terrazzo. Where floors are to receive carpet or flooring material, coordinate with appropriate trade and provide insert. Rectangular covers shall be parallel and perpendicular with the building or, if used, floor tile/floor joints/pattern. Coordinate cover type with the flooring and device type.

13. Outlet boxes installed in plaster, gypsum board or wood paneled hollow cavity walls shall be installed flush with raised plaster covers or raised tile covers. Boxes shall be mechanically fastened and supported by two (2) adjacent structural members (studs) with cross brackets (Garvin Industries Model BMB or approved equal).

14. Surface ceiling mounted outlet boxes shall be minimum 4 in. square, 1-1/2 in. deep, galvanized sheet metal.

15. Surface wall mounted outlet boxes shall be cast type boxes.

16. Do not install aluminum boxes, enclosures, or fittings in contact with concrete or earth.

17. Do not rely on locknuts to penetrate nonconductive coatings on enclosures. Remove coatings in the locknut area prior to assembling conduit to enclosure to ensure a continuous ground path.

18. Seal openings and knockouts in back and sides of boxes and enclosures with acoustically rated putty for boxes and enclosures in areas of walls with acoustical requirements. Provide gaskets for wallplates and covers.

19. Seal openings and knockouts in back and sides of boxes and enclosures in areas of walls with lead shielding requirements.

F. Wiring Methods:

1. Conductors shall not be installed until raceway system, including all outlets, cabinets, bushings and fittings, is completed. Verify that all work of other trades which may cause conductor damage is completed.
Use only U.L. approved cable lubricants when necessary. Do not use mechanical means to pull conductors No. 8 or smaller.

2. In general, conductors shall be the same size from the last protective device to the load.

3. Wiring systems shall be properly grounded and continuously polarized throughout, following the color-coding specified. Connect branch circuit wiring at panelboards, as required, in order to provide a "balanced" three-phase load on feeders.

4. Provide insulated green ground conductor in each branch circuit.

5. All feeder connections shall be made to bus and other equipment using solderless, pressure type terminal lugs.

6. Branch circuits connected to a 20A circuit breaker shall be sized as indicated except for lengths exceeding 75 ft. For circuits longer than 75 ft. to 100 ft. utilize No. 10 AWG conductors (line, neutral and ground) and for circuits from 100 ft. to 150 ft. utilize No. 8 AWG (line, neutral and ground) unless otherwise indicated. Conduit size shall be modified in accordance with the NEC.

7. For splices and taps, No. 10 AWG and smaller, use solderless "twist on" connectors having spiral steel spring and insulated with a vinyl cap and skirt.

8. For splices and taps, No. 8 and larger, use insulated solderless set screw AL/CU or hydraulically compressed sleeve fittings suitable for the intended use.

9. Use cast connections for ground conductors.

10. Provide minimum 6 in. of spare/slack of each conductor in each junction or pull box and termination.

11. Make all splices and connections in accessible boxes and cabinets only.

12. Cover uninsulated splices, joints, and free ends of conductor with rubber and friction tape of PVC electrical tape. Plastic insulating caps may serve as insulation. Heat shrink sleeves shall be acceptable for crimp type splices.

13. On termination at branch circuit outlets, leave a minimum of 8 in. free conductor for installation of devices and fixtures.

14. Feeder conductors shall be continuous from point of origin to load termination without splice. If this is not practical, contact the Owner's Representative and receive written approval for splicing prior to installation of feeder(s). Where feeder conductors pass through junction and pull boxes, bind and lace conductors of each feeder together. For parallel sets of conductors, match lengths of conductors as near equal as possible.

15. Branch circuit conductors installed in panelboards, and control conductors installed in control cabinets and panels shall be neatly bound together using "Ty-Raps" or equal.

16. Provide conduit seals and explosion proof devices as indicated on the plans and as dictated by the NEC for all hazardous locations indicated on the drawings.

17. Lighting fixtures, detectors, etc., in mechanical equipment, boiler and pump rooms shall be installed with exposed wiring after equipment, ductwork, piping, etc., are in place. In general, lighting shall be as located on the drawings; where conflicts exist, locate lights for best distribution.

18. Fire proof tape all medium voltage cables in handholes, man holes, building entrance and junction/pull boxes.

19. Medium voltage cables shall be installed, terminated and tested by trained and qualified personnel with a minimum of 5 years' experience. Training shall be for all types of installations and for the specific types of splices/terminations. Installation shall be in accordance with the cable manufacturer and IEEE. Provide circuit tagging with engraved phenolic plate attached with UV resistant tie wrap indicating source, circuit # and date installed with 3/16 in. test.

20. Provide cable/conductor vertical support in accordance with the NEC.

21. The following systems are permitted to be installed in cable tray in compliance with the NEC:

    a. Communication cable.

    b. Security cable.

G. Receptacles:

1. Ground opening shall be up for vertical installation and on the left for horizontal installation.

H. Toggle Switches:

1. Switches shall be installed in accessible locations near room/space entryway(s).

2. Provide lighted handle switches in mechanical rooms, elevator pits, electric rooms, etc.

3. Switches shall have neutral pulled through the box even if not used.

I. Junction and Pull Boxes:

1. Install junction and pull boxes in readily accessible locations. Access to boxes shall not be blocked by equipment, piping, ducts and the like. Provide all necessary junction or pull boxes required due to field conditions and size as require by the National Electrical Code.

J. Equipment Mounting Heights: Coordinate with architectural interior and exterior elevations.

1. Unless otherwise noted, mount devices and equipment at heights measured from finished floor to device/equipment centerline as follows:

    a. Toggle switches (up position "on") 46 in.

b.	Wall lighting controls (dimmer, digital switch, etc.	46 in.
c.	Receptacle outlets (long dimension vertical, ground" pole farthest from floor)	18 in.
d.	Receptacle outlets above counters	8 in. above counters
e.	Receptacle outlets, above hot water or steam baseboard heaters. Do not install receptacle outlets above electric baseboard heaters	30 in.
f.	Receptacle outlets, hazardous areas; also for refrigerators	48 in.
g.	Receptacle outlets, weatherproof, above-grade	24 in.
h.	Clock outlets (104 in. AFF or 10 in. below ceiling, whichever is lower) For large, high spaces, coordinate with Architect.	104 in.
i.	Telephone outlets	18 in.
j.	Telephone outlets, wall mounted	46 in.
k.	T.V. outlet	18 in.
l.	Fire alarm manual stations	46 in.
m.	Fire alarm combination audio/visual and standalone visual device (entire strobe lens at heights indicated)	80 in. to bottom of the notification device
n.	Standalone fire alarm audio device	90 in. (min) to 96 in. (max)
o.	Distribution panelboards, to top of backbox	72 in.
p.	Terminal cabinets, control cabinets, to top of backbox	72 in.
q.	Disconnect switches, motor starters, enclosed circuit breakers.	48 in.

2. Where structural or other interferences prevent compliance with mounting heights listed above, consult Owner's Representative for approval to change location before installation.

K. Hangers and Supports:

1. Provide steel angles, channels and other materials necessary for the proper support and erection of motor starters, distribution panelboards, large disconnect switches, large circuit breakers, pendant mounted lighting fixtures, etc.

2. Panelboards, disconnect switches, circuit breakers, cabinets, large pull boxes, adjustable speed drives, cable support boxes and starters shall be secured to the building structure and not supported from conduits. Small panelboards, etc., as approved by Owner's Representative, may be supported on walls. Racks for support of conduits and heavy electrical equipment shall be secured to building construction by substantial structural supports.

L. Identification:

1. Provide engraved lamicoid identification nameplates on switchboards, main service disconnects, transfer switches, motor control centers and on all panelboards using designation shown in panelboard schedule. Include voltage, phase, equipment served, voltage source to panel or equipment.

2. Provide engraved lamicoid identification nameplates for each circuit breaker in the main distribution panel listing the panelboard or equipment connected to each device.

3. Provide engraved lamicoid identification nameplates on all items of equipment including individual circuit breaker enclosures and disconnect switches, listing the equipment connected to the particular device provided under Specification Section 262000, including, but not limited to: starters, disconnect switches, adjustable speed drives, circuit breakers, etc. Include voltage, phase, equipment served, voltage source to panel or equipment.

4. Provide complete type written directory for each panelboard listing room number, function, etc., for each circuit breaker. Directory shall be placed in a plastic clear sleeve in the interior of the panelboard door. Provide type written updated panelboard directories for existing panelboards affected by this work.

5. Nameplates shall be engraved black, with white core, with Helvetica medium 3/16 in. lettering. 1/8 in. lettering is acceptable where space of 3/16 in. is not available.

6. Identify junction and pullboxes for particular service and circuit such as power, emergency power, lighting, fire alarm, telephone, interphone, public address, nurse call, etc. using stencil lettering on cover.

7. Where voltage exceeds 600V provide permanent signage indicating "DANGER - HIGH VOLTAGE - KEEP OUT". Provide signage at each electrical room indicating "DANGER - ELECTRICAL ROOM". Utilize adhesive backed, yellow background, block lettering signage at door.

8. Using adhesive backed printed tape label (white background, black lettering) all receptacle and switch coverplates, power poles, etc. listing panel designation and circuit number. Tape shall be attached to outside of receptacle or switch coverplates.

M. Spare Parts:

1. Deliver to Owner and obtain receipt for spare parts including key switches, fuses, etc.

3.2 TESTS

A. Branch circuits shall be tested during installation for continuity and identification and shall pass operational tests to determine that all circuits perform the function for which they are designed. For all feeder and exterior branch circuit wiring rated 600 volts or less, provide 1,000 volt "Megger" insulation test prior to energizing feeders. Use a 1,000-volt motor driven megger for all tests. Test voltage shall be applied until readings reach a constant value, and until three (3) equal readings, each one (1) minute apart, are obtained. Minimum megger reading shall be 45 megohms for feeder conductors. Document test results and submit for approval prior to energizing conductors.

END OF SECTION 26 05 01

SECTION 26 05 26 - GROUNDING

PART 1 - GENERAL

1.1 DESCRIPTION

A. Provide grounding system equal to or exceeding the requirements of NEC and as indicated in the contract documents. Raceway system which includes metal conduit, wireways, pullboxes, junction boxes, busway, wire ways, cable trays, enclosures, motor frames, etc., shall be made to form a continuous, conducting permanent ground circuit of the lowest practical impedance to enhance the safe conduction of ground fault currents and to prevent objectionable differences in voltage between metal nonload current carrying parts of the electrical system.

B. Provide solid grounding of building structures and electrical and communications systems and equipment. It includes basic requirements for grounding for protection of life, equipment, circuits and systems. Types of grounding systems include the following:

1. Electrical Service and Transformer Grounding
2. Building Grounding
3. Equipment Room Ground Terminal Bar
4. Electrical Equipment Grounding
5. Surge Protection Device (SPD) Grounding
6. Telecommunications Grounding
7. Equipotential Grounding Systems
8. Underground Distribution Grounding
9. Common Ground Bonding with Lightning Protection System

1.2 QUALITY ASSURANCE

A. All methods of construction, details of workmanship, that are not specifically described or indicated in the contract documents, shall be subject to the control and approval of the Owner's Representative. Equipment and materials shall be of the quality and manufacture indicated in their respective sections of the specifications. The equipment specified is based upon the acceptable manufacturers listed. Equipment types, device ratings, dimensions. etc., correspond to the nomenclature dictated by those manufacturers. Where "or equal" is stated, equipment shall be equivalent in every way to that of the equipment specified and subject to approval. All equipment shall be tested at the factory. Unless specified elsewhere, standard factory inspection and operational tests will be acceptable.

B. Electrical Components, Devices and Accessories: Listed and labeled as defined in the NEC by Nationally Recognized Testing Laboratory (NRTL) and marked for intended use.

C. Comply with UL 467 for grounding and bonding materials and equipment.

1.3 REQUIREMENTS

A. Grounding conductors, bonding conductors, jumpers, grounded conductors, etc. shall be sized in accordance with the NEC.

B. Equipment and materials shall be installed in accordance with the manufacturer's recommendations.

1.4 SUBMITTALS

A. Provide submittals for the following:

1. Ground rods and connectors.

2. Ground bars.

PART 2 - PRODUCTS

2.1 MATERIALS

A. Conductors:

1. Exposed grounding components such as bars, straps, cables, flexible jumpers, braids, shunts, etc., shall be bare copper unless otherwise indicated.

2. Grounding conductors in raceway with 600V circuiting shall be insulated to match the circuit conductors with green color.

3. Grounding conductors used with system voltage greater than 1000V shall be bare unless otherwise indicated.

4. Grounding conductor size shall be as indicated or as required by the NEC whichever is larger, stranded, soft drawn or soft annealed copper, unless otherwise indicated. Sizing shall take into account circuit voltage drop.

5. Acceptable Manufacturers:

a. Same make as for 600 volt conductors.

B. Ground Rods:

1. Provide solid copper or copper clad steel cylindrical rods, 3/4 in. minimum diameter and minimum 10 ft. long with pointed end. Provide units suitable for extension connection when ground rods longer than 10 ft. are indicated.

2. Acceptable Manufacturers:

   a. Copperweld
   b. Erico
   c. Burndy
   d. Approved equal.

C. Connectors, Clamps and Terminals:

1. Mechanical connectors and clamps shall be made of copper alloy or silicon bronze. Solderless compression terminals shall be copper, long-barrel, NEMA two bolt. Bolts and washers (Belleville) shall be of comparable material or stainless steel.

   a. Acceptable Manufacturers:

      1) Burndy
      2) Hubbell Anderson Corp.
      3) Thomas & Betts
      4) Approved equal

2. Exothermic Welds:

   a. Provide exothermic welds designed for size and type of intended cable, rods, structure, etc. Solder prohibited for connections, except for medium and high voltage cable metallic tape shields (utilize mechanical and solder).

   b. Acceptable Manufacturers:

      1) Erico "Cadweld"
      2) Burndy "ThermOweld"
      3) Approved equal

3. Pipe Clamp:

   a. Pipe clamp for bonding to pipe type electrode (water pipe, etc.) shall be a suitably sized copper alloy clamp.

   b. Acceptable Manufacturers:

      1) Burndy GAR-BU
      2) O-Z Gedney Type CG
      3) Burndy "Durium"
      4) AFL Global "Everdur"
      5) Approved equal

4. Flexible Strap:

   a. Flexible grounding straps shall be of braided high conductivity copper with two hole connector. Strap shall have equal to or greater than ampacity of the system it is bonding to. Strap shall provide flexibility in all directions when installed properly.

   b. Acceptable Manufacturers:

      1) Burndy
      2) OZ Gedney
      3) Approved equal

5. Electrostatic Floor Bonding:

   a. Listed grounding kit for bonding ESD carpet, vinyl, rubber and epoxy floor coverings and coatings to ground with the following components:

      1) 1 in. wide copper grounding tape.

      2) Heavy gauge stainless steel ground termination plates with double sided conductive tape and 20 in. long lead wire with a #10 terminal ring at the end.

      3) Acceptable Manufacturers:

         a) Ground Zero Electrostatics Inc. "Zerostat" Floor Termination and Grounding Kits.

D. Ground Bars

1. Provide ground bars where indicated. Ground bars shall be:

   a. 98% conductive copper, minimum.

   b. 4 in. x 1/4 in. thick minimum with length as indicated with minimum 36 in. for electric room/MDF and all other minimum of 24 in.

   c. Standard NEMA bolt hole patterns with maximum quantity of lug locations. Spacing of 1-1/8 in. apart.

2. Bar shall be mounted to an accessible wall location with galvanized steel hardware and 2000V rated insulators. Mounting shall be suitable for full complement of cabling.

3. Unit shall conform to EIA/TIA standards.

4. Acceptable Manufacturers:

   a. Erico
   b. Newton Instrument
   c. Burndy
   d. Harger

PART 3 - EXECUTION

3.1 INSTALLATION

A. Grounding Conductors:

1. Provide grounding conductor(s) with all power circuits. Conductor shall be sized as indicated or as required by the NEC as a minimum and shall be terminated on the equipment, device, enclosure, etc. grounding terminal. Conductor size shall be for the entire length unless approved by the Engineer where oversized for voltage drop.

2. Conductors above grade to ground electrodes (water piping, structural column, etc.) and to equipment (service entrance, ground bars, ground halos, etc.) shall be installed in metallic conduit with ends bonded to the conduit.

3. Grounding conductors shall be installed to have a minimum radius of 3 in.

4. Grounding conductors in a raceway system shall be terminated/bonded to each box, cabinet, enclosure, etc. through which it passes or terminates.

5. Grounding conductors routed with underground circuits shall be bonded to each ground electrode and metallic cable support system within the raceway system including pull and access locations.

6. Stranded conductors penetrating vapor barriers, foundations, slab on grade and water stop membranes shall have the interstitial spaces between strands filled with solder 4 in. beyond the membrane each side. The conductor shall be sealed to the membrane with a manufacturer approved method.

B. Raceway Systems:

1. All metal supports, cable trays, messenger cables, frames, sleeves, brackets, braces, etc. for the raceway system, panels, switches, boxes, starters controls, etc., which are not rigidly secured to and in contact with the raceway system, or which are subject to vibration and loosening, shall be bonded to the raceway system.

2. Termination of rigid conduit at all boxes, cabinets, and enclosures shall be made up tightly with a double locknut arrangement and a bushing, bushings being of the insulated type. Utilize grounding bushings as specified elsewhere in these specifications.

3. Conduit which runs to or from boxes, cabinets, or enclosures having concentric or eccentric knockouts which partially perforate the metal around the conduit and hence impair the continuity of system ground circuits shall be provided with bonding jumpers connected between a grounding type bushing/locknut on the conduit and a ground bus or stud inside the box, cabinet, or enclosure and attached thereto.

4. Conduit expansion joints and telescoping sections of metal raceways shall be provided with bonding jumpers sized in accordance with the NEC.

C. Ground Rods:

1. Ground rods shall be driven vertically the full length plus 24 in., minimum.

2. Ground rods shall be located in virgin soil or loamy compacted soil.

D. Connectors Clamps and Terminals:

1. Connectors utilized above grade in dry accessible locations shall be mechanical or exothermic type.

2. Connectors in damp locations, below grade or if not indicated shall be exothermic type.

3. Clean the area near the connecting surfaces prior to any connection to ensure effective contact. Cleaning shall be to the bare metal. Wire brush area if needed to remove rust scale paint, dirt, etc. to expose bare metal.

4. Exothermic connections shall be installed in accordance with the manufacturer's recommendations and tested with heavy blow of a five pound sledge.

E. Flexible Strap:

1. Flexible straps shall be used when bonding vibrating/moveable equipment, with expansion fittings and where recommended by the manufacturer.

2. Sufficient slack shall be provided to compensate for the anticipated vibration, movement and expansion.

F. Primary Electrical Equipment/Systems:

1. Transformers:

a. Primary voltages including those above 600 volts.

b. Provide a minimum of two #4/0 bare ground conductors from the transformer pad electrodes or building main ground bar to the transformer enclosure ground stud/pad/terminals.

c. Provide a #4/0 bare ground conductor from each lightning arrester to the transformer enclosure ground stud/pad/terminals.

d. For exterior pad mounted transformers, provide a bonding conductor sized in accordance with the NEC from the transformer neutral terminal to the ground stud/pad/terminals.

e. Connect system primary and secondary circuit grounding conductors to the transformer enclosure ground stud/pad/terminals.

2. Metal Enclosed/Metal Clad Switchgear:

a. Equipment includes metal enclosed/metal clad switch units, switch and fuse units, auxiliary units, metering units, air circuit breaker units, etc. these shall be effectively grounded in accordance with requirements described herein and the manufacturers recommendations.

b. Provide two (2) #4/0 ground conductors from the equipment ground bus to the ground bar or one (1) #4/0 ground conductor from the equipment ground bus to the building ground bar for every two (2) compartments in a continuous line-up equipment, whichever is the greater number.

c. Connect system circuit grounding conductors to the equipment ground bus.

3. Cabling:

a. All medium and high voltage cable shielding shall be bonded to the local ground system in all buildings, switchgear, transformers, manholes containing splicing/connectors, etc. Suitable terminations, connectors, splices, etc. should be used to expose the cable shield for grounding.

b. The grounding conductors contained in the interstices of interlocked armor cable shall be connected to the ground bus at every equipment termination point and to each other and to system ground; ground at every splice location.

c. The grounding conductor contained in raceway systems shall be connected to the ground bus at every equipment termination point and to each other and to system ground; ground at every splice location.

G. Secondary Electrical Systems:

1. The neutral (grounded) conductor of each low voltage, single and/or polyphase system or distribution system, except special isolated double insulated systems, shall be solidly connected to ground at the transformer neutral bushing, or at the main secondary switchgear to the system ground, and shall be sized for current carrying capacity, not to be less than as required by the NEC.

Ground connection shall be to the building grounding system, building steel, building water service, building concrete reinforcement and as indicated.

2. Provide equipment grounding conductor, green colored insulation, with phase conductors, to primary side of all transformers rated 600 volts or less circuited to the enclosure and secondary neutral bushing, to all electrical utilization and distribution equipment; insulation shall be same type as phase conductors. Transformer enclosures shall be bonded to the primary and secondary circuit grounding conductor.

3. Equipment grounding conductors shall extend from the point of termination back to the ground bus of the source panelboard, switchboard, transformer, or switchgear.

H. Equipment Grounding:

1. Poles Supporting Outdoor Lighting Fixtures: Install grounding electrode and a separate insulated equipment grounding conductor in addition to grounding conductor installed with branch circuit conductors.

2. Surge Protection Device (SPD) Ground Conductor Installations: Extend SPD dissipation ground conductors to local equipment ground bus and to common grounding electrode conductors. Size conductors per SPD manufacturer recommendations and the NEC.

I. Communications Rooms:

1. For each building communications room or closet provide one (1) wall mounted ground bar bonded to the main building ground bar or electrical service ground with insulated **[#2] [#2/0]** AWG conductor.

2. Local cable trays, equipment racks, etc. shall be bonded to the ground bar with insulated #6AWG minimum.

J. Grounding and Bonding for Piping:

1. Metal Water Service Pipe: Install insulated copper grounding conductors in conduit from building's main service equipment or grounding bus to main metal water service entrances to building. Connect grounding conductors to main metal water service pipes using a bolted clamp connector or by bolting a lug-type connector to a pipe flange using one of the lug bolts of the flange. Where a dielectric main water fitting is installed, connect grounding conductor on street side of fitting. Bond metal grounding conductor or sleeve to conductor at each end.

2. Water Meter Piping: Use braided-type bonding jumpers to electrically bypass water meters. Connect to pipe with a bolted connector.

3. Bond each aboveground portion of gas piping system downstream from equipment shutoff valve.

K. Underground Distribution:

1. Manholes and Handholes: Provide a driven ground rod through opening in the floor/bottom with 4 in. exposed. If necessary due to the site conditions, install the ground rod prior to manhole/handhole installation and provide a #1/0AWG bare conductor from the ground rod with an exothermic connection in the manhole/handhole. Seal the opening with waterproof nonshrinking grout.

2. Bond exposed parts within manhole/handhole such as inserts, pulling rings, cable racks, ladders and cable shields to the ground rod with #2AWG bare conductor minimum. Conductors shall be neatly installed around the perimeter of the unit and support 3 ft. on center with non-corrosive support and hardware.

3.2 GROUND TERMINAL BUS INSTALLATION

A. Install ground terminal bar in rooms where shown on the drawings. Mount bar 18 in. above finished floor by anchors and bolts using 1-1/2 in. long insulated spacer between bar and wall. Use a minimum of two (2) supports 18 in. on center. Connect all grounding electrode system conductors, system enclosure ground bus, and other indicated electrode systems to the terminal bar.

B. Label grounding conductors terminated to bus for equipment, location, electrode, etc served.

3.3 TESTS

A. Test the building ground system before backfilling to ensure continuity and determine system resistance value.

B. Testing procedure shall be a fall of potential type with a moving auxiliary electrode in accordance with IEEE Standard 142 and reviewed/approved by the Engineer. Sufficient test points shall be taken for accurate resistance value.

C. Make resistance measurements in dry weather, no earlier than 48 hours after rainfall. Provide tabulated test results indicating distance between rods and resistance readings on a plotted graph.

D. Test each ground electrode system separately prior to connection to the system or main building ground bar. Test each system ground electrode system a second time after backfilling has occurred and all final connections (building steel, water service, etc.) have been made.

E. Soil type, date, time, meter manufacturer/model number, person performing the test, test witnesses and most recent rainfall shall be noted in test submittal.

END OF SECTION 26 05 26

This page intentionally left blank.

SECTION 26 20 00 - ELECTRIC DISTRIBUTION

PART 1 - GENERAL

1.1 DESCRIPTION

A. Provide a complete distribution system as indicated on the Contract Documents and as specified herein.

1.2 QUALITY ASSURANCE

A. All methods of construction, details of workmanship, that are not specifically described or indicated in the contract documents, shall be subject to the control and approval of the Owner's Representative. Equipment and materials shall be of the quality and manufacture indicated in their respective sections of the specifications. The equipment specified is based upon the acceptable manufacturers listed. Equipment types, device ratings, dimensions, etc., correspond to the nomenclature dictated by those manufacturers. Where "or equal" is stated, equipment shall be equivalent in every way to that of the equipment specified and subject to approval. All equipment shall be tested at the factory. Unless specified elsewhere, standard factory inspection and operational tests will be acceptable.

B. Installation shall be in accordance with NFPA-70 (National Electrical Code), National Electrical Safety Code (NESC), state codes, local codes, and requirements of authority having jurisdiction.

C. Equipment shall be designed, manufactured, assembled, and tested in accordance with the latest revisions of applicable published ANSI, NEMA, UL and IEEE Standards.

1.3 SUBMITTALS

A. Submit the following product data/information:

1. Manufacturer and equipment type.

2. Standard catalog information sheet.

3. Detailed shop drawings indicating plan, elevation, end and isometric views. Top and bottom conduit areas shall be clearly shown and dimensioned on the drawings.

4. Single-line diagram.

5. Complete Bill of Materials.

6. All relevant ratings including, but not limited to, voltage, current, interrupting and withstand.

7. Overcurrent Device Information. Model number, available settings, setting ranges, capabilities, etc.

8. Submit available and final settings, programming and adjustments.

B. Submit product data and information for the following equipment, materials, products, etc.:

1. Dry type transformer(s) including shielded and linear load transformer(s).

2. Distribution and branch circuit panelboards.

3. Enclosed circuit breakers.

4. Disconnect switches.

5. Surge Protective Devices.

1.4 WARRANTY

A. Provide full system warranty (labor, travel, equipment, etc.) in accordance with Division 1 and a minimum of one (1) year from acceptance.

PART 2 - PRODUCTS

2.1 MATERIALS

A. Distribution Panelboards (Nominal 600 Volt):

1. Provide distribution panelboards as indicated in the "Panelboard Schedule" and as located on the drawings. Panelboards shall be equipped with quick make/quick break thermal magnetic, molded case circuit breakers as scheduled.

2. Panelboard bussing and lugs shall be copper. Provide grounding bus in each panelboard, securely bonded to the box. Panelboard bus structure, main lugs, and main breaker shall have current ratings as indicated. Such ratings shall be established by heat rise tests with maximum hot spot temperature on any connector or bus bar not to exceed 50°C rise above ambient.

3. Circuit breakers shall be equipped with individually insulated, braced and protected connectors. Large permanent, individual circuit numbers shall be affixed to each breaker in a uniform position. Tripped indication shall be clearly shown by the breaker handle taking a position between "ON" and "OFF". Provisions for additional breakers shall be such that no additional connectors will be required to add breakers.

4. Each panelboard, as a complete unit shall have a short circuit rating equal to or greater than the rating shown on the Panelboard Schedule. All panelboards shall be fully rated. "Series Ratings" are NOT acceptable. The use of series rating of panelboards for short circuit rating is not acceptable.

5. Panelboard assembly shall be enclosed in a steel cabinet. The rigidity and gauge of steel to be as specified in UL Standard 50 for cabinets. The size of wiring gutters shall be in accordance with UL Standard 67. Cabinets shall be equipped with locks and all locks shall be keyed alike. End walls shall be removable. Fronts shall be of code gauge, full-finished steel with rust-inhibiting primer and baked enamel finish.

6. The panelboard interior assembly shall be dead front with panelboard front removed. Panelboard front shall be door in door construction with full length piano-hinge. Main lugs or main breakers shall be barriered on five (5) sides. The end of the bus structure opposite the mains shall be barriered.

7. Panelboards shall be UL listed for use intended.

8. Ratings shall be as indicated in the contract documents.

9. Manufacturers: Subject to compliance with contract documents, the following manufacturers are acceptable:

   a. Square D "I-Line" - Design Make.
   b. Eaton Corporation "PRL3"
   c. General Electric by ABB ReliaGear "neXT"

B. Branch Circuit Panelboards (480Y/277 volt, 208Y/120 volt):

1. Provide branch circuit panelboard as indicated in the "Panelboard Schedule" and as located on the drawings. Panelboards shall be equipped with quick make/quick break thermal-magnetic, molded case circuit breakers as scheduled.

2. Panelboard bussing and lugs shall be copper. Provide grounding bus in each panelboard, securely bonded to the box. Panelboard bus structure and main lugs or main circuit breaker shall have current ratings as indicated. Such ratings shall be established by heat rise tests, conducted in accordance with UL Standard 67.

3. Provisions for additional circuit breakers shall be such that field addition of connectors or mounting hardware will not be required to add circuit breakers to the panelboard. Bus connections shall be bolt-on.

4. Each panelboard, as a complete unit, shall have a short circuit current rating equal to or greater than the rating shown on the Panelboard Schedule or on the plans. All panelboards shall be fully rated. "Series Ratings" are NOT acceptable. Reducing breaker ratings on the basis of series rating is not acceptable.

5. The panelboard bus assembly shall be enclosed in a steel cabinet. The rigidity and gauge of steel to be specified in UL Standard 50 cabinets. Wiring gutter space shall be in accordance with UL Standard 67 for panelboards. Each front shall include a door and have a flush, stainless steel, cylinder type lock with catch and spring-loaded door pull. All panelboard locks shall be keyed alike. Doors shall be mounted by completely concealed steel hinges. A circuit directory frame and card with a clear plastic covering shall be provided on the inside of the door. Fronts shall be of code gauge, full-finished steel with rust inhibiting iron phosphate sealer and baked enamel finish. Minimum box width shall be 20 in. Provide door-in-door construction. Panelboard to be keyed to match the Owner's existing system.

6. Ratings shall be as indicted on the Panelboard Schedule.

7. Manufacturers: Subject to compliance with Contract Documents, the following manufacturers are acceptable:

   a. 480Y/277 Volt:

      1) Square D "NF" - Design Make.
      2) General Electric by ABB "AE"
      3) Eaton Corporation "PRL2"

   b. 208Y/120 Volt:

      1) Square D "NQ" - Design Make.
      2) General Electric by ABB "AQ"
      3) Eaton Corporation "PRL1"

C. Circuit Breakers:

1. Circuit breakers below 200 amp frame shall be molded case with inverse time and instantaneous tripping functions, unless indicated otherwise in contract documents.

2. Listed combination of coordinated circuit breakers shall be verified by the equipment manufacturer utilizing published data sheets. Confirm listings shall be submitted.

3. Lugs shall be mechanical, rated for 60/75° AL/Cu.

4. Branch circuit breakers shall be quick-make, quick-break, thermal-magnetic and trip indicating, and multipole breakers shall have common trip. Single pole 15 and 20 ampere circuit breakers shall be UL listed as "Switching Breakers" at 120V ac or 277 V ac and carry the SWD marking.

5. Ratings shall be as indicated in the Contract Documents.

6. Manufacturers: Subject to compliance with contract documents, the following manufacturers are acceptable:

   a. Square D Micrologic trip unit - Design Make.
   b. Eaton Corporation Optim 550 trip units for circuit breakers 400 - 1600 amp frame or RMS 610 trip units for 2000 amp frame to 6000 amp frame
   c. General Electric Spectra RMS or MicroVersa trip unit.
   d. Siemens Sentron Sensitrip III trip unit

7. Enclosed circuit breakers shall be molded case, thermal-magnetic type, ratings as noted, with overcenter, trip-free, toggle-type operating mechanism, quick make/quick break action and positive handle indication. Multiple pole breakers shall be common trip type. Each circuit breaker shall have a permanent trip unit containing individual thermal and magnetic trip elements in each pose.

   Provide provisions for padlocking in the "off" position. Breakers shall be calibrated for operation in an ambient temperature of 40°C and shall be suitable for mounting and operating in any position. Breakers shall have removable lugs, UL listed for copper and aluminum conductors. Breakers shall be installed in NEMA 1 general purpose, surface enclosures, unless otherwise noted.

   a. Manufacturers: Subject to compliance with Contract Documents, the following manufacturers are acceptable:

      1) Square D
      2) Cutler Hammer
      3) General Electric by ABB

D. Disconnect Switches:

1. Shall be heavy-duty type three-pole, with "Quick Make/Quick Break" operating handle mechanically interlocked with the cover, horsepower and voltage rated to match equipment served. Where indicated switches shall be provided with dual-element, time delay, rejection type fuses. Switches shall be installed in NEMA 1 for indoor use, NEMA 4X for outdoor use. Provide provisions for padlocking in the "off" position. Provide neutral bar in single phase or three phase, four wire circuits, and ground bar in all switches. Provide auxiliary contacts where called for.

2. All disconnects connected downstream of ASD's shall have a normally open and normally closed auxiliary contacts which shall be wired to the ASD to indicate disconnect is open.

3. Manufacturers: Subject to compliance with Contract Documents, the following manufacturers are acceptable:

   a. Square-D - Design Make.
   b. Cutler Hammer.

E. Fuses:

1. All fuses rated 600 volts and below shall be rejection type dual-element, time-delay type. Provide two (2) complete sets of fuses for all fusible devices. Deliver spare fuses to the Owner and obtain receipt.

2. Manufacturers: Subject to compliance with Contract Documents, the following manufacturers are acceptable:

   a. Fuses 600 Amperes and Below: Bussman Type FRS-R (600 volts), Bussman Type FRN-R (300 volts) or equivalent.

   b. Fuses Rated Above 600 Amperes: Bussman Type KRP-C or equivalent.

F. Surge Protective Device:

1. Device shall be rated for location as shown on drawings.

2. Seven Mode Protection: Line-to-neutral (three), line-to-ground (three) and neutral-to-ground.

3. Provide test report from a recognized independent testing laboratory verifying the Surge Protective Devices (SPD) can survive published surge current rating on both a per mode and per phase basis. ANSI/UL 1449, latest edition.

4. Surge Current Capacity - The minimum total surge current tested with the ANSI/IEEE C42.41, 20 kA-8/20 microsecond waveform that the device is capable of withstanding shall be as shown in the following table:

	Application	Peak Surge Current Per Phase	Nominal Discharge Current - In Per Mode
a.	Type 1	250 kA	20 kA
b.	Type 2	160 kA	20 kA

5. Unit shall comply with ANSI/UL-1449, latest edition. Voltage Protection Rating (VPR) per Mode must not exceed the following for Type 1 SPD:

   a. 208Y/120, L-N 700 volts, L-G 700 volts, N-G 800 volts, L-L 1000 volts.

   b. 480Y/277, L-N 1200 volts, L-G 1200 volts, N-G 1200 volts, L-L 2000 volts.

6. Unit shall comply with ANSI/UL-1449, latest edition. Voltage Protection Rating (VPR) per Mode must not exceed the following for Type 2 SPD:

   a. 208Y/120, L-N 800 volts, L-G 700 volts, N-G 800 volts, L-L 1000 volts.

   b. 480Y/277, L-N 1000 volts, L-G 1200 volts, N-G 900 volts, L-L 1800 volts.

7. UL-1283 bi-directional high frequency noise attenuation for electric line noise shall be 50 dB at 10 kHz-100 MHz.

8. Short Circuit Current Rating: 200 KAIC.

9. Indication system:

   a. A green/red LED indicator for each phase.

   b. Flashing trouble light.

   c. Shall alarm open circuit damage, thermal conditions and overcurrent.

   d. Transient surge counter.

   e. Provide dry contact for remote monitoring.

10. External mounted model.

11. Manufacturers: Subject to compliance with contract documents, the following manufacturers are acceptable:

    a. Square D.
    b. Cutler Hammer SPD.
    c. Current Technology

2.2 SHORT CIRCUIT PROTECTION, COORDINATION AND ARC FLASH STUDY

A. The contractor shall provide an electrical power systems study as described below and submitted for approval prior to final equipment submission. Submit documents/drawings of complete short circuit, coordination and arc flash study for the electric distribution system for this project including the service entrance to all branch circuit panelboards and branch circuits 50A and over. Documents shall be prepared by a licensed Professional Engineer in New York State with at least 5 years' experience in similar studies, using the most current software version of SKM Power Tools. Study documentation shall include:

   1. Software used to prepare study with a description of the software philosophy.

   2. Quantities, ratings and characteristics of all system components.

   3. Impedance data for each piece of equipment.

4. Calculation methods and tabulations.

5. One-line diagrams and impedance diagrams.

6. Service entrance characteristics (available short circuit, X/R ratio, voltage, etc).

7. Available short circuit at each node in the system with associated required equipment ratings.

8. Coordination verification with equipment settings and time current graphs.

9. Arc flash energy level at each piece of equipment with adhesive labels.

10. Conclusions and recommendations.

B. Short Circuit Current:

1. Perform short circuit current calculations to determine the available short circuit current at each piece of distribution equipment.

2. Calculations shall take into account the following:

a. Available utility short circuit current.

b. System impedances (transformers, conductors, etc.).

c. Conduit types.

d. Motor contribution for motors.

C. Coordination:

1. Electrical distribution system shall be fully coordinated from the service entrance to branch circuit over current protection.

2. Emergency electric distribution system shall be fully coordinated from the service entrance to the branch circuit over current protection.

3. The coordination shall meet the current edition of ANSI/IEEE Standard 242 - Recommended Practice for Protection and Coordination of Industrial and Commercial Power Systems. The study shall indicate that this standard was used as the basis for the study.

4. Field settings, adjustments and minor modifications necessary for conformance with the recommendations shall be accomplished without additional expense to Owner. Provide documentation that all applicable over current protective devices have the recommended settings and have been suitably calibrated.

5. Coordination graphs shall indicate coordination proposed for systems indicated on log-log graph forms. Coordination graphs shall include:

   a. Complete descriptive titles.

   b. Graph for all over current devices.

   c. Thermal damage curves (conductors, transformers, etc.), available short circuit current limits, rated current levels and over current protective device operation bands. Over current protective device operation bands shall be for the recommended settings.

   d. Indication that applicable devices are inherently selectively coordinated with associated back up list from the manufacturer.

   e. Listing of all project over current devices with manufacturer and model number.

   f. Recommended settings for all adjustable over current protective devices.

6. Equipment design discrepancies and proposed corrective modifications if required shall be submitted with studies with variations clearly note.

D. Arc Flash:

1. Arc flash evaluation shall be provided to determine the arc flash energy at each piece of distribution equipment. Calculation shall be in accordance with IEEE 1584 and NFPA 70E.

2. Two separate arc flash energy levels shall be calculated and displayed on separate labels in locations that an arc flash energy reduction maintenance switch is utilized to indicate the energy with and without the switch engaged.

3. Arc flash calculations shall utilize finalized and approved over current protective device settings.

4. Arc Flash labels shall be furnished and installed on the appropriate equipment after the Short Circuit, Coordination and Arc Flash Study has been completed and approved. Layout and information on the label shall be approved by the engineer of record.

E. Once competed and approved, provide the Owner and Engineer an electronic copy of the full calculations, inputs and outputs.

PART 3 - EXECUTION

3.1 INSTALLATION

A. All equipment shall be grounded per the NEC.

B. Electrical distribution equipment shall have lugs/terminations suitable for the indicated conductor size. Where conductors have been oversized for voltage drop and where approved by the Engineer it shall be allowed to reduce the conductor size using hydraulically crimpled splice in a box next to the distribution equipment to allow for standard lug termination.

C. Install dry-type transformers with adequate clearances for proper ventilation. Bolt floor mounted transformer to pad.

D. Distribution switchboards, motor control centers and floor mounted dry-type transformers shall be mounted on 4 in. high concrete pads which shall extend 3 in. on all sides. Securely bolt the unit to the pads for proper horizontal and vertical alignment.

E. Coordinate transformer pad dimensions with transformer manufacturer's requirements. Coordinate transformer pad locations, dimensions and details with General Contractor.

F. Provide pad lockable branch circuit breaker device to hold circuit breaker in the closed position, but not prevent overcurrent protection, for all branch circuits serving fire alarm controls panels, emergency lighting and life safety branch circuits.

G. Identification:

1. Identify all items of equipment as described in Section 260501-3.1, Identification. Identification shall be provided for switchboards, panelboards, transformers, ASD's, motor starters, disconnect switches, enclosed circuit breakers, switchboard main/distribution breakers, MCC's automatic transfer switches, UPS's, generators, surge suppression devices, control panels, switchgear, etc.

2. Switchboards, panelboards, MCC's, switchgear, etc. shall have a label indicating name/tag ID, feeder source, conductor color convention and for service entrance locations the available short circuit current.

3.2 ELECTRICAL LOAD TEST

A. Conduct a load test prior to request for final payment and comply with the following:

1. Energize maximum normal light and power load for a period of two hours when scheduled.

2. Record voltage at service and at each panel.

3. Measure current in each phase of all feeders.

4. Adjust transformer taps as directed by engineer after review of report.

5. Provide and install all necessary metering equipment.

6. Owner's Representative or Site Representative shall witness the test.

7. Before final acceptance specified test shall be completed to the satisfaction of the Owner's Representative who shall be sole judge of the acceptability of such tests and who may direct the performance of such additional tests as deemed necessary in order to determine the acceptability of the systems, equipment, material and workmanship. Additional tests required by the Owner's Representative shall be provided at no additional cost. Protective equipment shall be actuated in a manner that clearly demonstrated their workability and operation.

3.3 CLEANING

A. At the completion of the project, while equipment is de-energized, it shall be thoroughly cleaned to a shipped condition using methods in accordance with the manufacturer's recommendations. Utilize vacuum for cleaning and not compressed gas.

3.4 SPARE PARTS

A. Deliver loose equipment to the Owner and obtain receipt for fuses, keys to panelboards, etc.

3.5 DISCONNECT DEVICES

A. All disconnect devices downstream of ASD's: Provide wiring, conduit and connections between ASD and disconnect auxiliary switch to ASD.

END OF SECTION 26 20 00

This page intentionally left blank.

SECTION 26 29 13 - MOTOR CONTROLLERS

PART 1 - GENERAL

1.1 DESCRIPTION

A. Provide labor, materials, equipment and services as required for the complete installation and full operation of separately enclosed, preassembled, motor controls, rated 600V and less.

1.2 DEFINITIONS

A. ASD: Adjustable speed drive motor controller.

B. CPT: Control power transformer.

C. DDC: Direct digital control. Building management/control system.

D. EMI: Electromagnetic interference.

E. PWM: Pulse width modulated.

F. RFI: Radio-frequency interference.

1.3 SUBMITTALS

A. Submit manufacturer's product data for each type and rating of motor controller indicated.

1. Include dimensions, weights, enclosure types, rating capacities, operating characteristics, electrical characteristics, furnished specialties and accessories, mounting and attachment details, method of field assembly, components, and location / size of each field connection.

2. Include diagrams for power, signal, and control wiring.

B. As part of Operation and Maintenance Data, provide manufacturer's written instructions for testing, adjusting, and reprogramming microprocessor control modules, setting field-adjustable timers, controls, and status and alarm points, and setting field-adjustable overload relays.

1.4 QUALITY ASSURANCE

A. All methods of construction, details of workmanship, that are not specifically described or indicated in the contract documents, shall be subject to the control and approval of the Owner's Representative. Equipment and materials shall be of the quality and manufacture indicated in their respective sections of the specifications. The equipment specified is based upon the acceptable manufacturers listed.

Equipment types, device ratings, dimensions, etc., correspond to the nomenclature dictated by those manufacturers. Where "or equal" is stated, equipment shall be equivalent in every way to that of the equipment specified and subject to approval. All equipment shall be tested at the factory. Unless specified elsewhere, standard factory inspection and operational tests will be acceptable.

B. Installation shall be in accordance with the manufacturer's recommendations, NFPA-70 (National Electrical Code), National Electrical Safety Code (NESC), state codes, local codes, and requirements of authority having jurisdiction.

C. Equipment shall be designed, manufactured, assembled, and tested in accordance with the latest revisions of applicable published ANSI, NEMA, UL and IEEE Standards.

D. Equipment and systems shall be NRTL tested and labeled.

1.5 WARRANTY

A. Provide full system warranty (labor, travel, equipment, etc.) in accordance with Division 1 with a minimum of one (1) year from acceptance.

PART 2 - PRODUCTS

2.1 MANUFACTURERS

A. Acceptable manufacturers include:

B. Adjustable Speed Drives (ASDs):

1. ABB (Design Make - ACH580)

2. Yaskawa

3. Eaton Corporation

C. Manual and Magnetic Motor Controllers:

1. Square-D - Design Make

2. Cutler Hammer

3. General Electric

4. Allen-Bradley

2.2 ADJUSTABLE SPEED DRIVE MOTOR CONTROLLER

A. General Requirements for ASDs:

1. ASD Description: adjustable speed drive, consisting of power converter that employs pulse-width-modulated inverter, factory built and tested in an enclosure, with integral disconnecting means and overcurrent and overload protection; arranged to provide self-protection, motor protection, and variable-speed control of one or more induction motors by adjusting output voltage and frequency. Comply with NEMA ICS 7, NEMA ICS 61800-2, and UL 508. Suitable for operation of NEMA MG 1, Design A and Design B motors, as defined by NEMA MG 1.

B. Unit Operating Requirements:

1. ASD shall provide full rated output from a line voltage of plus 10% and minus 10% of nominal voltage. ASD shall continue to operate without faulting from a +30% to -35% of nominal line voltage.

2. Input AC Voltage Unbalance: Not exceeding 5 percent.

3. Input Frequency Tolerance: Plus or minus 5 percent of ASD frequency rating.

4. Minimum Efficiency: 98 percent at 60 Hz, full load.

5. Minimum Primary-Side Power Factor: 98 percent under any load or speed condition.

6. Minimum Short-Circuit Current (Withstand) Rating: 100kA.

7. Ambient Operating Temperature Rating: 5 deg F (-15 deg C) to 104 deg F (40 deg C) minimum.

8. Humidity Rating: To 95 percent (noncondensing) minimum.

9. Altitude Rating: Suitable for intended location with 3300 feet minimum.

10. Vibration Withstand: Comply with NEMA ICS 61800-2.

11. Overload Capability: 1.1 times the base load current for 60 seconds; minimum of 1.3 times the base load current for two seconds.

12. Starting Torque: Minimum 140 percent of rated torque from 3 to 60 Hz.

13. Output Carrier Frequency: Selectable; 1 to 12.5 kHz.

14. Stop Modes: Programmable including fast, free-wheel, and dc injection braking.

C. Inverter: ASD shall employ a 6 PWM power electronic system, consisting of:

1. Input Section:

a. ASD input power stage shall convert three-phase AC line power into a fixed DC voltage via a solid state full wave diode rectifier.

2. Intermediate Section:

a. DC bus as a supply to the ASD output Section shall maintain a fixed voltage with filtering and short circuit protection.

b. DC bus shall be interfaced with the ASD diagnostic logic circuit, for continuous monitoring and protection of the power components.

3. Output Section:

a. Insulated Gate Bipolar Transistors (IGBTs) shall convert DC bus voltage to variable frequency and voltage.

b. The ASD shall employ pulse width modulated output technology to power the motor.

D. Isolated Control Interface: ASDs control input to follow remote-control signal (selectable 0-10VDC, 4-20mA, 0-20mA, and network) over a minimum 40:1 speed range with electrical signal.

E. Internal Adjustability Capabilities:

1. Minimum Speed: 5 to 25 percent of maximum rpm.

2. Maximum Speed: 80 to 100 percent of maximum rpm.

3. Acceleration: 0.1 to 6000 seconds.

4. Deceleration: 0.1 to 6000 seconds.

5. Current Limit: 30 to minimum of 150 percent of maximum rating.

F. Self-Protection and Reliability Features:

1. Surge Suppression: Factory installed as an integral part of the ASD, complying with UL 1449 SPD, Type 1 or Type 2.

2. Loss of Input Signal Protection: Selectable response strategy, including speed default to a percent of the most recent speed, a preset speed, or stop; with alarm.

3. Under and overvoltage protection.

4. Inverter overcurrent protection.

5. ASD and Motor-Overload/Over temperature Protection: Microprocessor-based thermal protection system for monitoring ASDs and motor thermal characteristics, and for providing ASD over temperature and motor-overload alarm and trip. The settings shall be selectable utilizing the keypad.

6. Critical frequency rejection, with three selectable, adjustable dead bands.

7. Instantaneous line-to-line and line-to-ground overcurrent trips.

8. Loss-of-phase protection.

9. Reverse-phase protection.

10. Short-circuit protection.

11. Motor over-temperature fault.

12. Shut down on indication of motor local disconnect switch open position.

G. Automatic Reset/Restart: Attempt three restarts after drive fault or on return of power after an interruption and before shutting down for manual reset or fault correction; adjustable delay time between restart attempts. Field adjustable for manual restart.

H. Power-Interruption Protection: To prevent motor from re-energizing after a power interruption until motor has stopped, unless "Bidirectional Autospeed Search" feature is available and engaged.

I. Bidirectional Autospeed Search: Capable of starting ASD into rotating loads spinning in either direction and returning motor to set speed in proper direction, without causing damage to drive, motor, or load.

J. Torque Boost: Automatically varies starting and continuous torque to at least 1.5 times the minimum torque to ensure high-starting torque and increased torque at slow speeds.

K. Motor Temperature Compensation at Slow Speeds: Adjustable current fall-back based on output frequency for temperature protection of self-cooled, fan-ventilated motors at slow speeds.

L. Integral Input Disconnecting Means: magnetic circuit breaker with pad-lockable, door-mounted handle mechanism.

M. The ASD shall include a motor flux optimization circuit that will automatically reduce applied motor voltage to the motor to optimize energy consumption and reduce audible motor noise.

N. The ASD shall provide a programmable loss-of-load (broken belt / broken coupling) Form-C relay output. The drive shall be programmable to signal the loss-of-load condition via keypad warning, Form-C relay output, or over serial communication bus.

O. Unit Mounted Operator Station: front-accessible, sealed keypad and plain-English-language digital display; allows complete programming, program copying, operating, monitoring, and diagnostic capability.

1. Keypad: In addition to required programming and control keys, include keys for HAND, OFF, and AUTO modes.

2. Security Access: Provide electronic security access to controls through identification and password with at least three levels of access: View only; view and operate; and view, operate, and service. Coordinate the access codes with the Owner.

P. Status indicators displaying the following conditions:

1. Power on.

2. Run.

3. Overvoltage.

4. Line fault.

5. Overcurrent.

6. External fault.

Q. Indicating Devices: Digital display mounted flush in ASD door and connected to display ASD parameters including, but not limited to:

1. Output frequency (Hz).

2. Motor speed (rpm).

3. Motor status (running, stop, fault).

4. Motor current (amperes).

5. Motor torque (percent).

6. Fault or alarming status (code).

7. PID feedback signal (percent).

8. DC-link voltage (V dc).

9. Set point frequency (Hz).

10. Motor output voltage (V ac).

R. Control Signal Interfaces:

1. Electric Input Signal Interface:

a. A minimum of two programmable analog inputs field selectable for 0- to 10-V dc or 4- to 20-mA dc.

b. A minimum of six multifunction programmable digital inputs.

2. Remote Signal Inputs: Capability to accept any of the following speed-setting input signals from the DDC system for HVAC or other control systems:

a. 0- to 10-V dc.

b. 4- to 20-mA dc.

c. Potentiometer using up/down digital inputs.

d. Fixed frequencies using digital inputs.

3. Output Signal Interface: A minimum of one programmable analog output signal (0- to 10-V dc or 4- to 20-mA dc), which can be configured for any of the following:

a. Output frequency (Hz).

b. Output current (load).

c. DC-link voltage (V dc).

d. Motor torque (percent).

e. Motor speed (rpm).

f. Set point frequency (Hz).

g. Any aux contacts.

4. Remote Indication Interface: A minimum of three programmable dry-circuit relay outputs (120-VAC, 1 A) for remote indication of the following:

a. Motor running.

b. Set point speed reached.

c. Fault and warning indication (overtemperature or overcurrent).

S. Interface with DDC System for HVAC: Factory-installed hardware and software shall interface with DDC system for HVAC to monitor, control, display, and record data for use in processing reports. ASD settings shall be retained within ASD's nonvolatile memory.

1. Provide EIA-485 port as standard. The standard protocols shall be BACnet MS/TP, Modbus RTU and N2. Provide additional ports for any other protocols that are utilized in the project.

T. Interface so ASD has indication of downstream disconnect switch(es) status (open-closed) and operates accordingly.

U. ASDs shall have an input inductive reactance either via 5% impedance AC line reactor or a pair of balanced DC chokes, one on the positive and one on the negative side of the DC bus, with an effective input impedance equivalent to a 5% AC line reactor. Any ASDs that do not meet this requirement must have a 5% AC line reactor added, with the reactor mounted in the same enclosure as the ASD.

V. EMI/RFI Filtering: Onboard filters shall allow ASD assembly to be CE marked; certify compliance with IEC 61800-3 for Category C2.

W. Additional Features:

1. Remote digital operator kit.

2. Communication Port: RS-232 port, USB 2.0 port, or equivalent connection capable of connecting a printer and a notebook computer.

X. Accessories:

1. General Requirements for Control-Circuit and Pilot Devices: NEMA ICS 5; factory installed in ASD enclosure cover unless otherwise indicated.

2. Reversible NC/NO bypass contactor auxiliary contact(s).

3. Control Relays: Auxiliary and adjustable solid-state time-delay relays.

2.3 MOTOR STARTERS

A. Provide motor starters as listed on the Electric Equipment and Control Schedule on the drawings.

B. Starters, contactors and controllers shall comply with NEMA standards having general purpose NEMA 1 or 1B enclosure unless otherwise called for. Provide explosion proof, weather resistant or watertight construction as required. Starters shall be minimum NEMA size 0 with solid state overloads in each phase sized per NEC, motor full load amperage, service factor, and motor operating conditions.

C. Pad lock arrangements shall be provided to lock the disconnect device in the "off" position. Magnetic starters shall be provided with a control power transformer with 120V secondary and primary and secondary fusing and be sized to accept the loads imposed there on. Starters shall have LED type pilot lights. Each starter subject to electrical interlock and/or automatic control shall have necessary auxiliary contacts.

D. Auxiliary Devices: Provide pushbutton stations, pilot lights, devices, relays, transformers, selector switches, electric thermostats, auxiliary starter contacts as required for functions called for. Provide separate relay for each speed to operate electric dampers or other devices as required for multispeed motor circuit.

E. Manual Motor Starter:

1. Provide all starters with thermal overload(s); and pilot light(s) and handle lock-out provisions. Gang starter with selector switch for multispeed applications. Provide single or 2-pole as required:

a. 120 volt, single-pole, surface mounted: Square-D FG-5P and handle guard.

b. 120 volt, single-pole, flush mounted: Square-D FS-1P and handle guard.

c. 240 volt, two-pole, surface mounted: Square-D FG-6P and handle guard.

d. 240 volt, two-pole, flush mounted: Square-D FS-2P and handle guard.

e. 120 volt, single-pole, two speed, surface mounted: Square-D FG-11P and handle guards.

f. 120 volt, single-pole, two speed, flush mounted: Square-D FF-11P and handle guards.

g. 240 volt, two-pole, two-speed, surface mounted: Square-D FG-22P and handle guards.

h. 240 volt, two-pole, two-speed, flush mounted: Square-D FF-22P and handle guards.

i. 120 volt, single-pole, H-O-A selector, surface mounted: Square-D FG-71P and handle guard.

j. 120 volt, single-pole, H-O-A selector, flush mounted: Square-D FS-71P and handle guard.

k. 240 volt, two-pole, H-O-A selector, surface mounted: Square-D FG-72P and handle guard.

l. 240 volt, two-pole, H-O-A selector, flush mounted: Square-D FS-72P and handle guard.

m. 120 volt, single-pole, surface mounted, explosion proof: Square-D FR-1.

n. 240 volt, two-pole, surface mounted, explosion proof: Square-D FR-2.

F. Manual Motor Starter - Speed Controller: Shall be similar to "Manual Motor Starter," above, except two-gang with motor speed control sized to handle motor indicated, with positive full on and full off bypass of speed control unit.

G. Manual Starter with Relay: Shall be similar to "Manual Motor Starter," above, except to include a two-gang box with relay sized for load indicated, and hand-off-automatic switch. Connect relay for 120V operation on load side of starter in "automatic" mode. Coordinate connection of Form C maintained contact for control with Mechanical Contractor.

H. Magnetic Starter: Shall be single-speed, across-the-line type rated in accordance with NEMA standards, sizes and horsepower ratings. Starters shall be mounted in NEMA 1 enclosures unless otherwise indicated. Magnetic starters shall be equipped with fused control power transformer for 120V control power and double break silver alloy contacts; all contacts shall be replaceable without removing starter or disconnecting power wiring. Starter shall have straight-through wiring. Coils shall be of molded construction and shall be replaceable from the front without removing starter. Overload relays shall be solid state type with replaceable control circuit module. Thermal units shall be of one-piece construction and interchangeable. Starter shall be inoperative if thermal unit is removed. Provide hand-off-auto selector switch and start-up pushbuttons and "run" pilot light in cover. Wire for maintained contact unless otherwise noted.

I. Combination Magnetic Starter: Shall be similar to "Magnetic Starter," above, except shall include fusible disconnect switch connected ahead of starter. The disconnect handle shall be in control of the disconnect device with the door open or closed. Disconnect handle shall be clearly marked as to whether the disconnect device is "on" or "off".

J. Combination Two-Speed Magnetic Starter: Shall be similar to "Combination Magnetic Starter", above, except with two starters, and six thermal overload units coordinated to match torque and horsepower characteristics of the motor. Starter shall be designed for variable torque operation, and shall be provided with high-low-off-auto selector switch and high and low pilot lights mounted in the cover. Wire for maintained contact unless otherwise noted.

K. Combination Reduced Voltage Magnetic Starter: Shall be similar to "Combination Magnetic Starter," above, except autotransformer closed transition reduced voltage type with autotransformer protection by winding over-temperature device.

L. Packaged Control Unit: Shall be furnished and mounted by others, and installed and connected by Electrical Contractor. This can consist of one or more starters, overloads and additional control devices prewired.

M. Contactor: Shall be similar to "Magnetic Starter", above, except without thermal overload units.

2.4 ENCLOSURES

A. Enclosures: NEMA 250, to comply with environmental conditions at installed location. Provide Type 1 for dry and clean indoor locations, Type 3R for outdoor locations, Type 4X stainless steel for kitchen and wash-down areas, and Type 12 for areas subject to dust, falling dirt, and dripping non corrosive liquids.

PART 3 - EXECUTION

3.1 EXAMINATION

A. Examine areas, surfaces, and substrates to receive motor controllers, with installer present, for compliance with requirements for installation tolerances, and other conditions affecting performance of the Work.

B. Examine motor controllers before installation. Reject motor controllers that are wet, moisture damaged, or mold damaged.

C. Examine roughing-in for conduit systems to verify actual locations of conduit connections before motor controller installation.

D. Prepare written report, endorsed by Installer, listing conditions detrimental to performance of the Work.

E. Proceed with installation only after unsatisfactory conditions have been corrected.

3.2 INSTALLATION

A. Wall-Mounted ASDs: Install with tops at uniform height and with disconnect operating handles not higher than 79 inches above finished floor, unless otherwise indicated, and by bolting units to wall or mounting on lightweight structural-steel channels bolted to wall. For controllers not on walls, provide freestanding racks.

B. Wall-Mounted Manual and Magnetic Controllers: Install on walls with tops at uniform height, and by bolting units to wall or mounting on lightweight structural-steel channels bolted to wall. For controllers not at walls, provide freestanding racks.

C. Floor-Mounting Controllers: Install ASDs on 4-inch nominal thickness concrete base.

1. Install dowel rods to connect concrete base to concrete floor. Unless otherwise indicated, install dowel rods on 18-inch centers around the full perimeter of concrete base.

2. For supported equipment, install epoxy-coated anchor bolts that extend through concrete base and anchor into structural concrete floor.

3. Place and secure anchorage devices. Use setting drawings, templates, diagrams, instructions, and directions furnished with items to be embedded.

4. Install anchor bolts to elevations required for proper attachment to supported equipment.

D. Roof-Mounting Controllers: Install ASD on roofs with tops at uniform height and with disconnect operating handles not higher than 79 inches above finished roof surface unless otherwise indicated, and by bolting units to curbs or mounting on freestanding, lightweight, structural-steel channels bolted to curbs. Seal roof penetrations after raceways are installed.

E. Temporary Lifting Provisions: Remove temporary lifting eyes, channels, and brackets and temporary blocking of moving parts from enclosures and components.

F. Install fuses, heaters in thermal-overload relays (based on actual nameplate full-load amperes) after motors are installed, and install, connect, and fuse thermal-protector monitoring relays furnished with motor-driven equipment.

G. Maintain minimum clearances and workspace at equipment according to manufacturer's written instructions and NFPA 70.

H. Wiring within Enclosures: Bundle, lace, and train conductors to terminal points with no excess and without exceeding manufacturer's limitations on bending radii. Install lacing bars and distribution spools.

I. Setting of Overload Relays: Select and set overloads on the basis of full-load current rating as shown on motor nameplate. Adjust setting value for special motors as required by NFPA 70 for motors that are high-torque, high-efficiency, and so on.

J. Comply with NECA 1.

3.3 CONTROL WIRING INSTALLATION

A. Install wiring between ASDs and remote devices and facility's central-control system.

B. Bundle, train, and support wiring in enclosures.

C. Connect selector switches and other automatic-control devices where applicable.

D. Connect selector switches to bypass only those manual- and automatic-control devices that have no safety functions when switches are in manual-control position.

E. Connect selector switches with control circuit in both manual and automatic positions for safety-type control devices such as low- and high-pressure cutouts, high-temperature cutouts, and motor-overload protectors.

3.4 IDENTIFICATION

A. Identify motor controllers, components, and control wiring. Identify field-installed conductors, interconnecting wiring, and components; provide warning signs. Label each ASD with engraved nameplate. Label each enclosure-mounted control and pilot device. Identify all items as described in Section 260501

3.5 FIELD QUALITY CONTROL

A. Engage a factory-authorized service representative to test and inspect components, assemblies, and equipment installations, including connections.

B. Tests and Inspections for ASDs:

1. Inspect ASDs, wiring, components, connections, and equipment installation.

2. Test insulation resistance for each ASD element, component, connecting motor supply, feeder, and control circuits.

3. Test continuity of each circuit.

4. Verify that voltages at ASD locations are within 10 percent of motor nameplate rated voltages. If outside this range for any motor, notify Construction Manager & Owner's Representative before starting the motor(s).

5. Test each motor for proper phase rotation.

6. Perform tests according to the Inspection and Test Procedures for Adjustable Speed Drives stated in NETA Acceptance Testing Specification. Certify compliance with test parameters.

7. Correct malfunctioning units on-site, where possible, and retest to demonstrate compliance; otherwise, replace with new units and retest.

8. Test and adjust controls, remote monitoring, and safeties. Replace damaged and malfunctioning controls and equipment.

C. Tests and Inspections for Manual and Magnetic Motor Controllers:

1. Comply with the provisions of NFPA 70B, "Testing and Test Methods" Chapter.

2. Visual and Mechanical Inspection:

a. Compare equipment nameplate data with drawings and specifications.

b. Inspect physical and mechanical condition, anchorage, alignment, and grounding, and that the controller is clean.

c. Inspect contactors: Verify mechanical operation and contact gap, wipe, alignment, and pressure are according to manufacturer's published data.

d. Motor-Running Protection: Verify overload element rating is correct for its application and if protection is provided by fuses, verify correct fuse rating.

e. Inspect bolted electrical connections for high resistance using one of the two following methods:

1) Use a low-resistance ohmmeter. Compare bolted connection resistance values with values of similar connections. Investigate values that deviate from those of similar bolted connections by more than 50 percent of the lowest value.

2) Verify tightness of accessible bolted electrical connections by calibrated torque-wrench method according to manufacturer's published data or NETA ATS Table 100.12. Bolt-torque levels shall be according to manufacturer's published data. In the absence of manufacturer's published data, use NETA ATS Table 100.12.

f. Verify appropriate lubrication on moving current-carrying parts and on moving and sliding surfaces.

D. Motor controllers will be considered defective if they do not pass tests and inspections.

E. Prepare test and inspection reports, including a certified report that identifies the ASD and describes results. Include notation of deficiencies detected, remedial action taken, and observations made after remedial action.

3.6 STARTUP SERVICE

A. Engage a factory-authorized service representative to perform startup service. Complete installation and startup checks according to manufacturer's written instructions.

3.7 ADJUSTING

A. Program microprocessors for required operational sequences, status indications, alarms, event recording, and display features. Clear events memory after final acceptance testing and prior to Substantial Completion.

B. Set field-adjustable switches, auxiliary relays, time-delay relays, timers, and overload-relay pickup and trip ranges.

C. Adjust carrier frequency for optimal operation with load and conditions.

D. Adjust the trip settings of instantaneous-only circuit breakers and thermal-magnetic circuit breakers with adjustable, instantaneous trip elements. Initially adjust to 6 times the motor nameplate full-load amperes and attempt to start motors several times, allowing for motor cool-down between starts. If tripping occurs on motor inrush, adjust settings in increments until motors start without tripping. Do not exceed 8 times the motor full-load amperes (or 11 times for NEMA Premium Efficient motors if required). Where these maximum settings do not allow starting of a motor, notify Construction Manager & Owner's Representative before increasing settings.

3.8 DEMONSTRATION

A. Engage a factory-authorized service representative to train Owner's maintenance personnel to adjust, operate, reprogram, and maintain motor controllers.

END OF SECTION 26 29 13

This page intentionally left blank.

SECTION 26 50 00 - LIGHTING

PART 1 - GENERAL

1.1 RELATED DOCUMENTS

A. Drawings and general provisions of the Contract, including General and Supplementary Conditions and Division 01 Specification Sections, apply to this Section.

1.2 DESCRIPTION

A. Provide interior and exterior lighting systems, including luminaires, hangers, supports, fittings, wiring, connections and controls, as indicated in the Contract Documents for complete and operational systems. The lighting layouts on the drawings are diagrammatic only. Refer to architectural "Reflected Ceiling Plans" for exact location of interior luminaires. Luminaires, in general, have been specified for the particular type of ceiling in which they are to be installed. Verify the ceiling construction details and provide luminaires suitable for the respective ceiling types and room finish schedule.

1.3 REFERENCES

A. The following standards, criteria, codes, etc. shall be followed in the manufacture and installation of the lighting systems.

1. NFPA
2. NEC
3. IESNA
4. NEMA
5. ANSI
6. UL

1.4 ENERGY CONSERVATION WORK

A. Work installed as part of this Contract will be eligible for energy rebates/incentives available. The energy rebate shall be paid directly to the Owner. The Division 26 contractor shall cooperate with the Owner and the funding source to provide proof of purchase information, quantities involved, fill out forms, etc., to accommodate all required paperwork. Include all costs associated with this requirement.

1.5 QUALITY ASSURANCE

A. Luminaires shall be as specified in the "Luminaire Schedule". Luminaire types, appearance, characteristics, photometrics, finishes, etc., correspond to the specified manufacturer and associated series or catalog number listed in the "Luminaire Schedule". Products of other listed acceptable manufacturers shall be equivalent in every way to that of the luminaire specified.
The Engineer reserves the right to disapprove any luminaire type submitted which they feel is not equal in quality, appearance or performance to the luminaire specified.

B. Manufacturer's luminaire series or catalog numbers listed in the "Luminaire Schedule" indicate quality, type, and style, but may not cover required special design details. Provide luminaires having such special details as noted in the "Luminaire Schedule", as indicated by the specified luminaire model number and as required for proper installation.

C. All luminaires shall be new and bear a Nationally Recognized Testing Laboratories (NRTL) label for the service intended.

D. Luminaires shall be products of manufacturers regularly engaged in the manufacture of the type of luminaires specified and shall be the manufacturer's latest standard design that complies with specification requirements.

E. Verify the availability of all luminaires proposed to be used in the execution of the work prior to submitting same for approval. The discontinuance of production of any luminaire after such approval has been granted shall not relieve the Contractor from furnishing an approved luminaire of comparable quality and design at no additional cost.

F. Photometric and operational data shall be provided only by qualified and certified organizations. Certification documentation shall be submitted with the luminaire information.

G. Should there be any difference between drawings and schedules, secure from Architect/Engineer such information as necessary prior to providing proposal. When finishes are not definitely specified, they shall be as selected by the Architect and not be limited to standard finishes.

H. Locations indicated for luminaires are approximate. Field coordinate exact locations as near as possible to the location indicated. Coordinate with the Engineer for any major location changes.

1.6 SUBMITTALS

A. Product Data: For each luminaire type, include in a single submittal, in order of luminaire designation, the catalog "cut" sheet with complete manufacturer and model number. Product data should include the following:

1. Manufacturer and Catalog Number.

2. Features, accessories, materials and finishes.

3. Physical description and dimensions of luminaires.

4. Life, power input, output (lumens, distribution, CCT, and CRI) and energy-efficiency data.

5. Photometric data and adjustment factors based on laboratory tests (space to mounting height ratio, coefficient of utilization complete values, IES distribution, candlepower distribution by angle and luminaire efficiency). Format shall be in accordance with IES TM-27.

6. Power, signal, and control wiring diagrams between luminaires and controllers.

7. Lens/Louver Type.

8. Driver with each type luminaire as applicable (type, sound rating, overload protection, voltage, input/fixture wattage, ballast factor, power factor, etc.).

9. Certification of IES LM-79, IES LM-80 and TM-21 testing for LED luminaires. Luminaires shall be tested in accordance with IES LM and TM standards.

10. Proof of Energy Star listing.

11. Warranty.

B. Coordination Drawings: Provide coordination drawings in accordance with Section 260500. Reflected ceiling plan(s) and other details, drawn to scale, on which the following items are shown and coordinated with each other, using input from installers of the items involved:

1. Luminaires.
2. Suspended ceiling components.
3. Partitions and millwork that penetrate the ceiling or extend to within 12 inches of the plane of the luminaires.
4. Structure members to which equipment and or luminaires will be attached.
5. Initial access modules for acoustical tile, including size and locations.
6. Items penetrating finished ceiling, including other luminaires, air outlets and inlets, speakers, sprinklers, access panels, ceiling mounted projectors, etc.
7. Coordination of ceiling types and ceiling grids/structure to account for luminaire mounting and space requirements and luminaire lengths.

C. Color Chips: Provide color chips of available finishes for luminaires upon request of Architect/Engineer.

1.7 DELIVERY, STORAGE AND HANDLING

A. Luminaires and equipment shall be delivered with NRTL and manufacturer's labels intact and legible. Broken, cracked and damaged materials and equipment shall be removed from the site immediately and be replaced with new materials and equipment. Luminaires and accessories shall be stored in protected dry locations in their original unbroken package or container. Luminaires shall be protected from dust and dampness both before and after installation. Luminaires shall be protected from paint and cleaning solvents during all phases of construction.

PART 2 - PRODUCTS

2.1 LUMINAIRE REQUIREMENTS

A. Electrical Components, Devices, and Accessories: Listed and labeled as defined in NFPA 70, by a qualified testing agency, and marked for intended location and application.

B. NRTL Compliance: Luminaires for hazardous locations shall be listed and labeled for indicated class and division hazard by a NRTL.

C. UL Compliance: Comply with UL 1598 and UL 8750.

D. Recessed Luminaires: Comply with NEMA LE 4.

2.2 LIGHT-EMITTING DIODE (LED) LUMINAIRES

A. Luminaires shall be identical in construction features, options and appearance to the luminaries specified in the Luminaire Schedule. LED luminaires include white and RGBW systems as indicated on the luminaire schedule.

B. Luminaires shall be provided with all cables, controllers, power supplies, drivers, connectors, terminators and accessories required for a complete installation. LED system shall utilize pulse width modulation, non-linear scaling techniques and reverse polarity protection.

C. Provide dimming down to 10% as a minimum, or to percentage indicated or called for on the drawings. Unless otherwise indicated, the dimming control shall be a 0-10VDC signal

D. RGBW LED systems where indicated shall be capable of at least 8-bit control of red, green, blue and white module. RGBW LED system shall be capable of setting each module with a unique and individual address. Each address shall be controlled independently by DMX or alternate method protocol. All RGB LED fixtures shall undergo a minimum of eight-hour burn-in testing during manufacturing.

E. LED luminaires shall be high brightness and binned for forward voltage, luminous flux and wavelength.

F. LED luminaires shall be tested in accordance with IESNA LM-79 (luminous output, power input, luminaire efficacy (lumens/watt), color temperature and color rendering index), IESNA LM-80 (L70, output luminous maintenance, 10,000 hour minimum test, calculation method is not acceptable) and IESNA TM-21/28. Luminaire output shall be a minimum of 100 lumens/watt. Rated life shall be a minimum of 50,000 hours at 70% output. Testing shall be performed by a US Department of Energy (DOE) accredited laboratory.

G. Drivers shall be solid state Class 1 power supply/driver with universal input (120-277V). The system shall have a minimum 90% power factor, 3.5 maximum crest factor, minimum efficiency of 90%, a maximum of 20% THD and overload protection. Adequate heat sink capability shall be provided to ensure the rated life. Unit shall meet FCC rules and regulations.

H. Where indicated luminaires shall have color tuning capability and control. System to have separate dimming (5-100%) and color (3000K to 5000K, or as indicated on drawings) adjustability. Control shall be Dali or DMX512 for controllability as indicated. The system shall utilize the most recent settings when energized.

I. The luminaire (to include LED sources and drivers) shall have a full five (5) year minimum warranty for replacement and labor.

1. Acceptable LED Manufacturers:

a. Philips
b. Osram
c. Cree
d. Nichea
e. Lumiled

J. LED Emergency Drivers:

1. LED emergency drivers shall have the following minimum requirements:

a. Operate indicated fixtures at full illumination for 90 minutes minimum.

b. Universal voltage input (120 to 277V).

c. Upon loss of normal power, fixtures shall automatically switch to battery power.

d. Upon restoration of normal power, fixture shall return to normal mode and charge battery.

e. Battery shall be maintenance free, nickel cadmium type with a minimum life expectancy of seven (7) years.

f. Driver shall be suitable for the environment installed.

g. Driver shall be Class 2 and enclosed entirely in the fixture (except for down lights and exterior locations).

h. Units shall be listed for UL924 -Emergency Lighting and Power Equipment.

i. Minimum five (5) year non-prorated full warranty.

j. [Factory installed.]

k. Shall include an emergency system test switch above ceiling adjacent to fixture.

l. Unit shall be self-testing and provide indication of unit failure.

m. Design Make: Iota, ILB-CP series or approved equal.

2.3 EXIT LUMINAIRES:

A. Electrical Characteristics:

1. LED type for 120/277 volt supply.

2. Meet or exceed illumination requirements of NFPA 101 and all of the requirements of UL924.

3. Maximum input power of 5 watts per illuminated face.

4. Provide Universal mount unit.

5. Provide single or double face and arrows as indicated on Contract Documents.

6. Acceptable Manufacturers:

a. Per Contract Documents luminaire schedule

2.4 EMERGENCY LIGHTING UNIT WITH BATTERY BACK-UP:

A. Completely self-contained in compact, low profile injection molded UL 94V-0 flame rated thermoplastic housing, damp location rated with universal mounting plate.

B. Premium grade, pure lead maintenance free battery with sufficient capacity to operate the light sources for 90 minute to an end voltage of 87-1/2% of nominal battery voltage. Three stage charger (constant current, equalize and float charge), relay, low voltage battery disconnect and brownout protection circuits.

C. Glare-free LED type lighting source. Test switch and charge rate indicator.

D. Universal 120/277 volt supply.

E. Photometric output: for a location with 8' unit mounting height, 9' ceiling, 8' wide corridor and 80/50/20% reflectance, multiple unit spacing shall be:

1. Standard unit - 30' on center.

2. High output (HO) unit - 60' on center.

F. Acceptable Manufacturers:

1. Standard unit: Dual-Lite EV Series (Design make)

2. High output unit: Dual-Lite EVHC Series (Design make).

3. Approved equal.

2.5 LUMINAIRE CONSTRUCTION

A. Metal Parts:

1. Free of burrs and sharp corners and edges.

2. Sheet metal components shall be steel unless otherwise indicated.

3. Form and support to prevent warping and sagging.

B. Doors, Frames, and Other Internal Access: Smooth operating, free of light leakage under operating conditions. Designed to prevent doors, frames, lenses, diffusers, and other components from falling accidentally during maintenance and when secured in operating position.

C. Lenses:

1. Shall be listed materials tested in accordance with ASTM D-635, "Rate of Burning and/or Extent and Time of Burning of Self-Supporting Plastics in a Horizontal Position" and burns less than 2/5 inches per minute.

2. The products shall have a smoke density of less than 75 when tested in accordance with ASTM D-2843, standard test method for "Density of Smoke from the Burning or Decomposition of Plastics".

3. The flame spread rating shall not exceed 0-25 and smoke developed rating shall not exceed 450 in accordance with ASTM E-84, standard test method for "Surface Burning Characteristics of Building Materials".

4. Self-ignition shall not occur below 600°F, in accordance with ASTM D-1929, standard test method for "Ignition Properties of Plastics".

5. Materials shall remain in place 15 minutes at 175°F and fall from frame at 200° below ignition temperature in accordance with ASTM D-648, "Deflection Temperature of Plastics Under Flexural Load".

2.6 LUMINAIRE SCHEDULE

A. Luminaire schedule is found on the contract drawings.

PART 3 - EXECUTION

3.1 EXAMINATION

A. Examine substrates, areas, and conditions for compliance with requirements for installation tolerances and other conditions affecting performance of Work.

B. Examine roughing-in for luminaire to verify actual locations of luminaire and electrical connections before luminaire installation.

C. Proceed with installation only after unsatisfactory conditions have been corrected.

3.2 GENERAL INSTALLATION

A. Comply with NECA NEIS (National Electrical Installation Standard) latest edition.

B. All luminaires shall be installed as per manufacturer furnished installation instructions.

C. Provide for every luminaire as shown on the plans, or as scheduled on the drawings.

D. Location of all ceiling and wall mounted luminaires shall be as indicated on the Architectural and Electrical drawings. The contractor shall verify ceiling type, construction, and material prior to ordering.

E. Provide luminaires with an IC rating for luminaires installed in direct contact with insulation.

F. Provide plaster frames for plaster ceilings and flanged frames for drywall ceilings.

G. Install luminaires level, plumb, and square with ceilings and walls unless otherwise indicated.

H. Luminaires shall be suitable and as recommended by the manufacturer for the actual intended mounting method and materials.

I. Supports:

1. Sized and rated for luminaire weight.

2. Able to maintain luminaire position after cleaning and maintenance.

3. Provide support for luminaire without causing deflection of ceiling or wall.

4. Luminaire-mounting devices shall be capable of supporting a horizontal force of 100 percent of luminaire weight and a vertical force of 400 percent of luminaire weight.

J. Flush-Mounted Luminaires:

1. Secured to outlet box.

2. Attached to ceiling structural members at four points equally spaced around circumference of luminaire.

3. Trim ring flush with finished surface.

K. Wall-Mounted Luminaires:

1. Attached to structural members in walls, to a minimum 20 gauge backing plate attached to wall structural members, or using through bolts and backing plates on either side of wall.

2. Do not attach luminaires directly to gypsum board.

L. Suspended Luminaires:

1. Pendant and Rods:

a. Pendant mount luminaires from 1/4 in. threaded rods of required length.

b. Sleeve threaded rods with 1/2 in. EMT painted with color as directed by Architect/Engineer.

c. Brace pendants and rods longer than 48 inches to limit swinging.

2. Aircraft Cable:

a. Cables shall be 1/16 in. aircraft cable with end safety fittings. Cable shall be provided with 2 in. diameter mini-canopy and threaded coupler for attachment to a 1/4 in.-20 threaded stud extending 3/4 in. below ceiling.

b. Cable assembly shall include a spring-loaded adjustment device mounted in the fixture.

c. The Contractor shall be responsible for providing required supports for cable attachment.

d. For cord feed to the luminaire provide continuous cord clip of matching color to attach the cord to the cable.

e. Support per manufacturer's recommendations.

3. Support stem mounted, single unit luminaires with approved outlet box and accessories that hold tem and provide damping of luminaire oscillations. Support outlet box vertically to building structure using approved devices.

4. Use tubing or stem for wiring at one point of continuous rows of luminaires and tubing, rod, or wire support for suspension for each unit of length of luminaire chassis, including one at each end.

M. Ceiling-Grid-Mounted Luminaires:

1. Secure to any required outlet box.

2. Use approved devices and support components to connect luminaire to building structure in a minimum of four locations, spaced near corners of luminaire. Utilize #10 steel wire; similar to that used to support the ceiling grid.

3. Provide UL listed seismic hold-down clips and fasten to luminaires and to ceiling grid members at or near each luminaire corner.

4. Install luminaires of sizes less than ceiling grid as indicated on reflected ceiling plans or center in acoustical panel and support luminaire independently with at least two metal channels spanning and secured to ceiling tees.

5. Contractor to verify luminaire mounting and supports are compatible with the ceiling grid type and mounting/support requirements.

6. Contractor to coordinate recessed linear luminaire run lengths with the ceiling grid layout and required mains supports. All continuous run lengths to be verified and coordinated prior to determining the final housing lengths.

N. Cove Lighting:

1. Installed so as to produce a continuous and unbroken band of light with no shadows or light gaps.

O. Provide all necessary accessories for "end-to-end" mounting where continuous rows of luminaires are indicated. All luminaire assemblies shall be grounded.

P. Luminaires installed in continuous rows may be fed by a single outlet if luminaires are UL approved and suitable for through wiring in luminaire raceway.

Q. New luminaires may be provided to replace existing luminaires indicated to remain or be reused, subject to shop drawing approval.

3.3 REMOTE DRIVERS

A. Remote drivers shall be mounted in an approved NEMA 1 enclosure and shall be located in areas easily accessible to maintenance personnel.

B. Wiring from luminaire to remote driver shall not exceed the driver manufacturer's recommendations for distance.

C. Remote driver shall be clearly labeled indicating fixture served, voltage, panelboard and circuit number served from.

3.4 GROUNDING

A. Ground all non-current carrying parts of all lighting luminaires.

B. All grounding shall be accomplished with NRTL tested grounding connectors suitable for this purpose.

3.5 LABELING

A. Attach a self-adhesive red dot label, 1/2 in. in diameter, to all luminaires with an integral battery backup and/or those tied into an emergency generator. Labels shall be attached to these fixtures or to adjacent ceiling tiles so that they are readily discernible for testing and maintenance purposes.

3.6 FINAL CLEANING

A. Immediately prior to acceptance, damp clean diffusers, luminaire trim, reflectors, louvers, lens, and similar objects of all luminaires. Remove all dirt, corrosion, foreign material, finger marks, and blemishes. Replace all burned out LEDs and failed components.

3.7 FIELD QUALITY CONTROL

A. Perform the following tests and inspections:

1. Operational Test: After installing luminaires, switches, and accessories, and after electrical circuitry has been energized, test units to confirm proper operation.

2. Test of Emergency Lighting: Under supervision of Engineer, interrupt power supply to demonstrate proper operation. Verify transfer from normal power to battery power and retransfer to normal.

B. Luminaire will be considered defective if it does not pass operation tests and inspections.

C. Prepare test and inspection reports.

D. Replace luminaires damaged during shipment, construction, or installation.

3.8 STARTUP SERVICE

A. Comply with requirements for startup specified in Section 260936 "Lighting Controls."

3.9 ADJUSTING

A. Provide adjusting the direction of aim of luminaires to suit occupied conditions. Adjustment may be required during hours of darkness.

B. Final distribution shall be acceptable to the Owner and may take several attempts.

3.10 REMOVAL OF BALLASTS IN EXISTING LUMINAIRES

A. Assume ballasts contain PCB material unless labeled otherwise or test samples show materials are not PCB; submit a test report. Remove all ballasts from existing luminaires indicated on contract documents. Dispose of all ballasts which do not have non PCB labels in PCB containers and pay all costs to have containers taken to EPA approved incinerators and disposed of all EPA regulations. Follow all EPA regulations for transporting material.
If ballast has leaked in existing luminaires, remove material deposited in luminaire and dispose of those materials as indicated above. Provide documentation verifying disposal of PCB contaminated ballasts.

3.11 REMOVAL OF LAMPS IN EXISTING LUMINAIRES

A. The Contractor shall employ the service of a certified disposal/recycling service company to dispose of all removed fluorescent and/or HID lamps. All disposal procedures shall be performed in accordance with EPA Requirements and Subtitle C for the disposal of mercury contaminated lamps.

END OF SECTION 26 50 00

SECTION 26 55 00 - LIGHTING CONTROL

PART 1 - GENERAL

1.1 DESCRIPTION

A. Provide a complete lighting control system as indicated on the Contract Documents and as specified herein.

1.2 RELATED DOCUMENTS

A. Drawings and general provisions of the Contract, including General and Supplementary Conditions and Division 1 Specification Sections, apply to this Section.

1.3 QUALITY ASSURANCE

A. Equipment and materials shall be of the quality and manufacture indicated in their respective sections of the specifications. The equipment specified is based upon the acceptable manufacturers listed. Equipment types, device ratings, dimensions, etc. correspond to the nomenclature dictated by those manufacturers.

B. Installation shall be accordance with NFPA 70 (National Electrical Code), energy conservation codes, state codes, local codes, and requirements of authority having jurisdiction.

C. Equipment shall be designed, manufactured, assembled, and tested in accordance with the latest revisions of applicable published ANSI, NEMA and IEEE Standards.

D. All equipment shall NRTL tested.

E. All components and assemblies are to be factory pretested.

F. The controls provider must:

1. Provide equipment from manufacturers for which they maintain a contract, distributorship, are an agent, or other formal arrangement for which documentation can be produced showing authority to sell and service the equipment in this territory.

2. Demonstrate that they have successfully installed similar systems, utilizing their standard products, for a minimum period of five (5) years.

3. Employ service technicians who are trained in accordance with the systems manufacturer's recommendations.

4. Own and demonstrate proficiency in the use of the required test equipment, tools, etc. for the proper installation, set-up, testing and maintenance of the system. If requested, must provide a listing of tools and/or equipment and where appropriate, certifications in the proper training and use of the tools and/or equipment.

1.4 SUBMITTALS

A. Submit the following equipment, materials, and products including all components and accessories:

1. General Equipment

2. Vacancy/occupancy Sensors

3. Digital Lighting Control System

4. Lighting Control Panels

5. Emergency Lighting Control Devices

6. Wiring diagrams

7. Commissioning Plan

B. Submit the shop drawings and the product data specified below at the same time as a single submittal package.

C. Product Data: Provide equipment data sheets, specifications, wiring diagrams and installation instructions for all required system components.

D. Shop drawings shall include the following at a minimum:

1. Composite custom wiring and/or schematic diagram of each control circuit as proposed to be installed (standard diagrams will not be accepted). Wiring diagrams shall include all system components, including but not limited to: room controllers, digital switches, vacancy/occupancy sensors, photocells, isolated relays, digital I/O interfaces to conference room A/V systems, network interfaces, lighting control panels and associated components.

2. Scaled drawing for each area showing exact location of each room controller(s), digital switch(es), vacancy/occupancy sensor, daylight sensor, lighting control panel and other associated system components.

3. All system devices shall be located per the system manufacturers recommendations. All devices shall be suitable for the building configuration and intended operation.

1.5 SYSTEM DESCRIPTION

A. The lighting control system and/or components, as specified and indicated on the drawings to provide the intended and required control of the lighting systems.

PART 2 - PRODUCTS

2.1 GENERAL EQUIPMENT

A. Switches

1. Toggle/Snap

a. Unit shall be quiet operation, quick make/quick break, rated for 20A/120-277V/1hp at 120/277V, 90° rear plug in termination with pig tail, with nylon/polycarbonate toggle, self grounding mounting screw clip plate (not staple), ground terminal and silver alloy contacts. Units shall meet latest Federal Specification WS-896, NEMA WD-1 and UL Test 20.

b. Acceptable Manufacturers (for single pole units, provide two pole, three way, four way, illuminated handle, keyed, etc. type of the same quality and model).

1) Hubbell HBL1221

2) P&S 20AC1

3) Leviton 1221-2

2. Low Voltage

a. Unit shall be button type switch that is configurable from one button to eight buttons using point-to-point low voltage wiring for control of single or multiple loads. Each button shall provide a momentary contact and all share a common return. The switch shall be totally passive and contain no active electronics or power supply. Operation is dependent upon a Class 2 connection to a compatible relay panel or other device that can react to a momentary contact signal.

b. Each button shall have an LED indicator light that can serve as a status indicator or as a locator light. The LED indicators shall be powered by a 24VDC source originating from the lighting control panel or other device. The button quantities shall be as indicated on the plan views.

c. Acceptable Manufacturer

1) Wattstopper LVSW series (Design Make)

2) Acuity Brands

3) Hubbell

4) Approved Equal per Cornell Standards.

3. All device colors shall match the surrounding devices and shall be selected by the Architect.

B. Lighting Dimmers

1. Provide lighting dimmer where indicated suitable for the type of luminaire for even continuous control. Unit shall be rated for the indicated connected load plus 25% minimum (even when ganged). Review luminaire schedule and plans for type and loading. Provide for three-way control as indicated.

2. Low voltage dimming shall be as recommended by the luminaire manufacturer for magnetic or solid state.

3. LED dimmers shall be as recommended by the luminaire manufacturer and be listed for use with the associated driver.

4. Device color shall match the other project devices.

5. Acceptable Manufacturers:

a. Lutron (Design Make)

b. Crestron

c. Acuity Brands

d. Leviton

e. Approved equal per Cornell Standards

C. Time Switches:

1. Digital Lighting Controller:

a. Photosensor and manual inputs, battery back-up.

b. Astronomic control with holiday, 7 day and 56 point scheduling.

c. 120/277V input/control, SPDT 20A output.

d. NEMA 3R corrosion resistant enclosure with clear cover.

e. Design Make: NSI-Tork DGLC200A.

2. Electromechanical Controllers:

   a. DPST, 40A per pole: NSI-Tork 120V - 7002Z, 277V - 7202Z

   b. 3PST, 40A per pole at 277 volt: NSI-Tork 7302Z.

   c. Two-circuit lighting control center: NSI-Tork T-920L.

   d. Three-circuit lighting control center: NSI-Tork T-903-L.]

3. Digital Time Switch (for use with Lighting Contactor):

   a. SPDT, 7-day with 14 set points.

   b. Digital, AM/PM Clock with LCD display.

   c. Battery backup to keep program in memory for approximately seven (7) days.

   d. 120V Make: NSI-Tork EW120 or equal.

   e. 277 Make: NSI-Tork EW120-3 or equal.

4. Time switches shall be provided with NEMA 1 general purpose, surface mount enclosures unless otherwise noted.

D. Elapsed Time Switches:

1. Mechanical spring wound timer, which requires no electricity to operate the timing mechanism. Device shall fit a standard 2-1/2 in. deep wall box. Switch contacts shall break current carrying contacts at the end of the timed cycle.

   a. 0-30 Minutes: NSI-Tork A530M or equal.

   b. 0-4 Hours: NSI-Tork A504HH or equal.

   c. 0-12 Hours: NSI-Tork A512 or equal.

E. Digital Programmable Time Switch:

1. Programmable countdown time switch to automatically turn lighting or other loads off when the programmed on-time expires. 120VAC, 60Hz, neutral required with a 0-600W load rating suitable for incandescent, LED, fluorescent, magnetic low voltage, electronic low voltage and 1/6HP motor. Adjustable on-time from 5-55 minutes (5 minute increments) to 1-12 hours (15 minutes).

   a. Wattstopper RT-100 (Design Make)

   b. Acuity Brands

c. Hubbell

F. Photoelectric Controls:

1. Heavy Duty, 1/2 in. Conduit Mounting:

a. 120 volt, SPST, 2000 watt: Tork Model 2101.

b. 277 volt, SPST, 2000 watt: Tork Model 2104.

2. Combination Photoelectric Control and Contactor:

a. 120 volt, DPST, 3000 watt per pole: Tork Model 5403.

b. 277 volt, DPST, 3000 watt per pole: Tork Model 5404-3.

c. 208 volt, DPST, 3000 watt per pole: Tork Model 5404.

G. Lighting Contactors

1. Similar to magnetic motor starters without overloads. Refer to specification 262000.

2. Mechanically held, electrically operated with control as indicated.

3. NEMA 12 enclosure.

4. Supply with appropriate accessories to interface with 2-wire and 3-wire control devices as required by the Construction Documents.

5. 22,000 ampere withstand at 250V.

6. 30 ampere continuous current rating per pole at 600VAC.

7. Number of poles as indicated.

8. Manufacturers: Subject to compliance with Contract Documents, the following manufacturers are acceptable:

a. ASCO 918 Series.

b. Square D Class 8902

c. Eaton

d. GE

2.2 VACANCY/OCCUPANCY SENSORS

A. Vacancy/occupancy Sensors:

1. Vacancy/occupancy sensors shall comply with the following as a minimum:

a. Zero crossing switching operation (switch on/off only where sine wave is at zero volts) suitable for linear, non-linear and electronic/magnetic fluorescent ballasts for the loads indicated. Where the load to be controlled exceeds the sensor load rating provide a separate relay of adequate rating.

b. Failure of the unit shall be to the on/closed position or manual operation.

c. Motion sensitivity adjustment (dip switch or dial) and time delay adjustment (5 to 30 minutes minimum, dip switch or dial).

d. Line voltage input and switching. Field selectable for 120 or 277 VAC, 60 Hz.

e. UL listed and have a five (5) year manufacturer full replacement warranty.

f. Test mode feature to override the set time delay to allow adjusting of the sensitivity.

g. Sensor locations shall be adjusted during construction and at occupancy as recommended by the manufacturer for optimal sensing and operation.

h. Operation shall be field selectable with vacancy sensor being manual "on" with close switch/contact upon motion sensing and open after the set amount of time delay without motion or occupancy sensor being automatic on upon motion sensing.

i. Adjustable controls/settings shall only be accessible when the front cover is removed or from the back of the unit.

j. Unit color shall match the project devices except for the ceiling-mounted units which shall match the ceiling color. All color selections shall be by the Architect.

k. Ultrasonic sensing shall not be affected by air movement and shall operate at 32 kHz minimum (shall not interfere with hearing aids or other equipment).

l. Provide components as needed for the indicated control.

m. A factory-authorized representative shall coordinate and instruct the startup services of the sensors providing placement recommendations, connection guidance and startup supervision and adjustment.

2. Ceiling Mounted - Ultrasonic (Subscript "U"):

a. Unit shall mount to standard octagonal box, have auxiliary contact (Form C, 0.5A at 24 VDC), and utilize ultrasonic sensing.

b. Shall have self-contained rated contacts or control a separate switch pack. If a self-contained unit, then the ratings and function shall meet or exceed the switch pack specifications.

c. Sensing shall be 360 degrees with a minimum operating area of:

1) Major Motion (Walking/Arm Wave): 50 ft. x 30 ft.

2) Minor Motion (Small Motion at Desk): 40 ft. x 20 ft.

d. Corridor (Major Motion): 50 ft. x 16 ft.

e. Units shall be suitable for overlap of motion detection areas without reduction in spacing and false operation.

f. Sensing shall be suitable for a ceiling/mounting height of up to 12 ft. minimum.

g. Ambient light level sensing (adjustable 20-300 fc) to prevent "On" operation when the ambient light level is greater than the setpoint level.

h. The maximum depth shall be 1.5 in. below the ceiling/box.

i. Acceptable Manufacturers:

1) Wattstopper WT Series (Design Make)

2) Hubbell

3) Eaton

4) Acuity Brands

3. Ceiling Mounted - PIR Technology (No Subscript):

a. Unit shall mount to standard octagonal box, have auxiliary contact (Form C, 0.5A at 24 VDC), and utilize PIR technology motion sensing.

b. Shall have self-contained rated contacts or control a separate switch pack. If a self-contained unit, then the ratings and function shall meet or exceed the switch pack specifications.

c. Sensing shall be 360 degrees with a minimum operating area of:

1) Major Motion (Walking/Arm Wave): 50 ft. x 30 ft.

2) Minor Motion (Small Motion at Desk): 40 ft. x 20 ft.

d. Units shall be suitable for overlap of motion detection areas without reduction in spacing and false operation.

e. Sensing shall be suitable for a ceiling/mounting height of up to 12 ft. minimum.

f. Ambient light level sensing (adjustable 20-300 fc) to prevent "On" operation when the ambient light level is greater than the setpoint level.

g. The maximum depth shall be 1.5 in. below the ceiling/box.

h. Acceptable Manufacturers:

1) Wattstopper CI-24 (Design Make)

2) Hubbell

3) Eaton

4) Acuity Brands

B. Switch Pack:

1. Provide a minimum of one (1) switch pack for each ceiling-mounted vacancy/occupancy sensor. Provide additional units for multiple circuits (quantity to match the quantity of circuits).

2. Unit shall be plenum rated with line voltage side into a metallic box.

3. Low voltage power shall be suitable for a minimum of three (3) sensors. Multiple sensors shall be able to control a single switch pack.

4. Minimum switching capacity shall be 20A (all types of loads) at 120/277 VAC.

5. Shall have enough spare contacts provided at each sensor for HVAC system connection

2.3 DIGITAL LIGHTING CONTROL SYSTEM

A. General:

1. All associated system components shall be supplied from a single manufacturer and shall be compatible for communication as part of the digital lighting control network. Combining multiple manufactures system components to achieve the required system operation is not acceptable.

B. Vacancy/Occupancy Sensors:

1. Wall or ceiling mounted (to suit installation) dual technology digital (passive infrared and ultrasonic) occupancy sensor. Provide unit to accommodate the square-foot coverage requirements for each area controlled.

2. Sensors shall have adjustable settings and features as noted below. Sensor shall be adjusted through one of the following: graphic LCD display, push button or via software from handheld device.

a. Sensitivity: 0-100% in 10% increments.

b. Time Delay: 1-30 minutes in 1 minute increment. Time delay shall be set 30 minutes.

c. Detection Technology: Dual technology activation and or re-activation. The sensor shall be capable of being set to either PIR & Ultrasonic, PIR Only or Ultrasonic Only as required by the space being controlled as recommended by the manufacturer.

d. Test mode – Five second time delay

e. Walk-through mode

f. Selectable operating parameters shall include as a minimum Auto (Occupancy) / Manual (Vacancy) - ON, blink warning, and daylight enable/disable when photosenors/day-light sensors are included in the digital network.

3. Sensing shall be 360 degrees with a minimum operating area of:

1) Ultrasonic: 25 ft. x 25 ft.

2) Passive Infrared: 32 ft radial.

4. RJ-45 port(s) for connection to digital lighting control network.

5. Two-way infrared (IR) transceiver to allow remote programming through handheld configuration device and control by remote personal controls.

6. Assignment of occupancy/vacancy sensor to a specific load within the room without wiring or special tools.

7. Manual override of controlled loads.

8. Multiple occupancy sensors shall be installed in a room if required by the size/configuration by connecting them to the open topology digital lighting control network. No additional configuration shall be required.

9. Provide wall or ceiling mounted sensors as indicated on the drawings. Final locations of all sensors shall be in accordance with the manufacturer's recommendations.

C. Digital Daylight Sensor:

1. Digital daylighting sensor shall work with load controllers and relay panels to provide automatic switching, bi-level, or tri-level or dimming daylight harvesting capabilities for any load type connected to the controller or panel. Daylighting sensors shall be interchangeable without the need for rewiring.

   a. Closed loop sensors measure the ambient light in the space and shall control a single lighting zone.

2. Digital daylighting sensors shall include the following features:

   a. Sensor's internal photodiode shall only measure lightwaves within the visible spectrum. The photodiode's spectral response curve shall closely match the entire photopic curve. Photodiode shall not measure energy in either the ultraviolet or infrared spectrums. Photocell shall have a sensitivity of less than 5 percent for any wavelengths less than 400 nanometers or greater than 700 nanometers.

   b. Sensor light level range shall be from 1-6500 foot-candles (fc).

   c. Capability of ON/OFF, bi-level, tri-level switching or dimming, for each controlled zone, depending on the selection of load controller(s) and loads assigned to controller(s).

   d. For switching daylight harvesting, the daylight sensor shall provide a field-selectable deadband, or a separation, between the "ON Setpoint" and the "OFF Setpoint" that will prevent the lights from cycling excessively after they turn off.

   e. For dimming daylight harvesting, the daylight sensor shall provide the option, when the daylight contribution is sufficient, of turning lights off or dimming lights to a field-selectable minimum level.

f. Daylight sensors shall have a digital, independently configurable fade rate for both increasing and decreasing light level in units of percent per second.

g. Daylight sensors shall provide adjustable cut-off time. Cut-off time is defined by the number of selected minutes the load is at the minimum output before the load turns off. Selectable range between 0-240 minutes including option to never cut-off.

h. Integral infrared (IR) transceiver/sensor for configuration and adjustment using a handheld configuration device.

1) Configuration LED status light on device that blinks to indicate data transmission.

2) Status LED indicates test mode, override mode and load assigning.

i. Recessed switch on device to manually turn controlled load(s) ON and OFF.

j. RJ-45 port(s) for connection to digital lighting control network.

k. A choice of accessories to accommodate multiple mounting methods and building materials. Daylight sensors shall be mounted on a ceiling tile, skylight light well, suspended lighting fixture or backbox. Unit mounting shall be suitable for the intended location.

l. Any load or group of loads in a room shall be assignable to a daylighting zone.

m. Each load within a daylighting zone shall be individually enabled or disabled for discrete control (load independence).

n. All digital parameter data programmed into a daylight sensors shall be retained in non-volatile memory within the daylight sensors itself. Memory shall have an expected life of no less than 10 years.

D. Digital Wall Controller

1. General - Digital controllers may consist of multiple configurations and devices including but not limited to digital switches, dimmers and scene controllers. The digital controllers shall provide the control intent indicated on the drawings and connected to the digital lighting control network. Individual device operation shall meet the features indicated below.

2. Digital Switch - low voltage momentary pushbutton switches to have 1, 2, 3, 4, 5 and 8 button configurations; colors to be white, light almond, ivory, grey and black; compatible with wall plates with decorator opening.
The color shall match the other devices and be coordinated with the Architect.
Wall switches shall include the following features at a minimum:

   a. Fully configurable and adjustable using a handheld configuration device.

   b. Label each button and/or controller with custom silk screen labeling. Labeling identification shall be coordinated with the Owner for identification once the system has been configured.

   c. Button covers shall be field replaceable. Button replacement may be completed without removing the switch from the wall.

   d. Indicating LED on each switch that blinks to indicate data transmission.

   e. Scene Status LED on each switch button with the following characteristics:

      1) Bi-level LED that is field configurable.

      2) LED status indicates power to switch

      3) Bright status level indicates that load or scene is active

   f. RJ-45 port(s) for connection to digital lighting control network.

   g. Multiple digital wall switches shall be installed in a room by connecting them to the open lighting control network. No additional configuration shall be required to achieve multi-way switching.

   h. The following switch attributes shall be changed or selected using a handheld configuration device:

      1) Load and Scene button function reconfigured for individual buttons (from Load to Scene, and vice versa).

      2) Individual button function may be configured to Toggle, On only or Off only.

      3) Individual scenes may be locked to prevent unauthorized change.

      4) Switch buttons may be assigned to any load on any room controller and are not load type dependent; each button may be assigned to multiple loads.

3. Digital Dimming Switch - shall have the same features as the digital switches. Dimming switches shall have a raise/lower buttons that include LEDs to indicate the load dimming level. Buttons shall be labeled "UP" and "DOWN". The dimmer shall provide full function dimming control in multi-way applications, such as 3-way, 4-way and beyond.

   a. The following dimmer switch attributes shall be changed or selected using a handheld configuration device:

      1) Fade Up and Fade Down times for individual scenes and loads adjustable from 0 seconds to 18 hours.

      2) Ramp rate adjustable for each dimmer switch from 0 to 10 minutes.

4. Digital Scene Selector - shall have the same features as the digital switches. Scene selector switches shall have four programmable preset scene buttons and a separate master button to allow dimming raise/lower and all-on/all-off control of the individual scenes. The buttons shall have suitable labels.

E. Room Controllers

1. Room Controllers automatically assign the room loads to the connected devices in the space without the use of any tools. Room Controllers shall be provided to match the room lighting load and control requirements. The controllers shall not have, dip switches, potentiometers or require special configuration. The Room Controllers shall provide on/off/dimming control and shall include the following features as a minimum:

   a. Replacement: Using the default automatic configuration capabilities, a room controller may be replaced with an off-the-shelf unit without requiring any configuration or setup.

   b. Device status LEDs to indicate:

      1) Data transmission

      2) Device has power

      3) Status for each load

   c. Installation features:

      1) Standard junction box mounting

      2) Low voltage connections using standard RJ-45 patch cable

   d. UL 2043 plenum rated system.

e. Manual override and LED indication for each load

f. Dual voltage input (120/277VAC, 60 Hz).

g. Maximum of 20A combined load per Room Controller. Each relay rated for the following at 120/277VAC, 60 Hz:

1) 20A magnetic ballast or incandescent.

2) 16A electronic ballast or LED driver (meet NEMA 410 ratings).

3) 1/2 HP motor load.

h. Zero cross circuitry switching for each load.

i. One, two or three relay configuration. Provide additional room controllers networked together to accommodate the quantity of zones indicated on the drawings and as indicated in the room sequence of operation.

j. Equipment shall be suitable for the operating conditions within the intended locations.

k. RJ-45 digital lighting control network ports with the ability to connect all required room control devices for communication to the digital lighting control network.

l. Class 2 output to digital lighting network room devices suitably sized to power the devices within the room.

m. One (1) 0-10VDC analog class 2 dimming control signal per channel for control of compatible dimming ballasts and LED drivers.

n. The following dimming attributes shall be capable of being changed or selected using a handheld configuration device:

1) Establish preset level for each load from 0-100%

2) Set high and low trim for each load

3) Fade time from 0 seconds to 18 hours.

4) Set controller for switched or dimmed applications

F. Digital Lighting Control Network

1. The system network is to be an open topology lighting control physical connection and communication protocol designed to control the lighting in a area of a building. Digital room devices shall connect to the network using CAT 5e cables with RJ-45 connectors to provide both data and power to room devices. Features shall include:

a. Plug n' Go automatic configuration, communication and assigning of occupancy/vacancy sensors, switches and lighting loads connected together within a room or space.

b. Replacement of any device in the digital lighting control network with a standard off the shelf unit shall be capable of automatically configuring and operating using the factory default settings without custom configuration or setup.

G. Handheld Configuration Tool

1. Provide a configuration tool to facilitate optional customization of digital lighting control system, and used to set up open loop daylighting sensors. The handheld configuration tool shall either be a separate device using wireless infrared communications or be a downloadable application to a user's cell phone using wireless communications.

2. Features and functionality of the handheld wireless configuration tool shall include:

a. Two-way infrared (IR) communication with system devices within a range of approximately 30 feet.

b. High visibility organic LED (OLED) display, pushbutton user interface and menu-driven operation.

c. Read, modify and send parameters for occupancy/vacancy sensors, daylighting sensors, room controllers and buttons on digital wall switches and network settings.

d. Save up to nine occupancy sensor setting profiles, and apply profiles to selected sensors.

e. Temporarily adjust light level of any load(s) on the local network, and incorporate those levels in scene setting.

f. Adjust or fine-tune daylighting settings established during auto-commissioning, and input light level data to complete commissioning of open loop daylighting controls.

3. Provide a total of two (2) configuration tools or free access to the downloadable cell phone application. The units shall be turned over to the Owner to allow for future modifications to the digital lighting control system setup and programming.

H. Acceptable Manufacturers:

1. Wattstopper: Digital Lighting Management - DLM, (Design make).

2. Acuity Controls: nLight

3. Crestron Controls: GLPAC

4. Hubbell NX

2.4 EMERGENCY LIGHTING CONTROL DEVICES

A. Emergency Lighting Relay

1. Emergency Lighting Relay – To be a UL 924 listed device that monitors a switched circuit providing normal lighting to an area. The unit shall provide normal ON/OFF or dimmed and dimming control of emergency lighting to match the normal lighting. Upon normal power failure the emergency lighting circuit shall close, forcing the emergency lighting ON until normal power is restored. Features to include:

a. 120/277VAC, 60 Hz, 20A LED driver or electronic ballast rating. The relay voltage ratings shall match the lighting branch circuits.

b. Push to test button. Final button locations shall be coordinated with the Owner.

c. Auxiliary dry contact control for remote test switch or fire alarm system interface operation.

d. Provide separate auxiliary shunt relay when used with dimming driver/ballast to automatically open the 0-10VDC dimming control signal to automatically for the emergency luminaires to 100% output.

2. Acceptable Manufacturer:

a. Wattstopper - ELCU-200 (Design Make)

b. Functional Devices - ESRN

c. Acuity Brands

B. Emergency Lighting Bypass/Shunt Relay

1. Emergency Lighting Bypass/Shunt Relay - To be a UL 924 listed device that is suitable for shunting around wall/dimmer control switches in order to turn on emergency lighting when normal utility power is lost. Upon normal power failure, the relay coil is deactivated and the normally closed contact falls closed bypassing the lighting control switches or dimming controls to automatically turn the emergency lighting ON. Features to include:

a. 120/277VAC, 60 Hz, 20A LED driver or electronic ballast rating. The relay voltage ratings shall match the lighting branch circuits.

b. Provide SPDT or DPDT application based on the specified lighting control system and the relay manufacturer's requirements.

2. Acceptable Manufacturer:

a. Functional Devices - ESR Series (Design Make)

b. Iota

c. Acuity Brands

PART 3 - EXECUTION

3.1 INSTALLATION

A. Provide all required system components, interconnection wiring and branch circuit power connections as required by the lighting control system manufacturer to meet the intended sequence of operation and system performance requirements. All system wiring shall be in accordance with the system manufacturer's requirements at a minimum.

B. When using wire for connections other than the digital lighting control network (Category 5e with RJ-45 connectors), provide detailed point to point wiring diagrams for every termination. Provide wire specifications and wire colors to simplify contractor termination requirements. All Category 5e cabling and connectors shall be terminated and tested to meet the system manufacturer’s requirements. Category 5e cabling shall have a green thermoplastic jacket to easily identify from other building network cabling, building management system, or other low voltage systems cabling.

C. All line voltage wiring shall be installed in conduit. Terminations shall be done above accessible ceilings or within utility rooms and within a 4"x4" back box and have a suitable cover provided. Digital network devices (room controllers, isolated relays, plug load controllers, etc.) shall be mounted to a junction box and connected as recommended by the system manufacturer.

D. All low voltage control cabling shall be plenum rated. Cabling shall be installed in minimum 3/4" conduit in vertical runs in walls/partitions and inside mechanical/utility rooms. Provide suitable back box as required by the system manufacturer for the device being installed.

Above accessible ceilings all control cabling shall be installed within separate J-hook supports located at 3' on center with the cabling neatly bundled. All cabling inside utility rooms without ceilings shall be installed in conduit.

3.2 SYSTEM PROGRAMMING

A. Upon completion of the installation, the system shall be programmed by the manufacturer's factory authorized representative who shall verify a complete fully functional system.

B. The system manufacturer shall include separate individual site visits scheduled to complete the system programming and perform the following functions:

1. Initial system startup/programming (time shall be suitable to setup all system devices). A minimum of [two] days shall be accounted for the system initial setup.

2. Coordination with the owner to develop preferred lighting control scenes, scene illumination levels, button operation and coordinate day lighting requirements prior to final system programming. Once verified with the owner all system components shall be fully programmed and setup.

3. Verification of the system operation (time shall be suitable to test and verify day lighting functions are operating properly). The manufacturer shall provide light meters for verification; time shall be as required for proper testing of the system.

4. The lighting control system manufacturer shall coordinate all room names and scheduling with the owner prior to final setup.

5. The presence of the system manufacturer's service technicians to assist the installing electrician in all of the above is a requirement of this project and proof of time expended shall be provided to the Owner's Representative.

3.3 SYSTEM COMMISSIONING

A. The electrical contractor shall provide both the Owner and the electrical engineer with a minimum of ten working days written notice of the system startup and configuration date.

B. Refer to the lighting control details that are part of the Construction Drawings for sequence of operation and commissioning requirements of the project lighting control scenarios.

C. All lighting control systems and components shall be commissioned to verify sensor location, time delay/sensitivity is properly set, auto-on/manual-on, override times, controls, day-lighting control, communications between control panels, and timeclock controls are operating as intended.

D. Calibrate all sensor time delays, sensitivity settings and properly aim to guarantee proper detection of occupants and energy savings.

1. Adjust time delay so that controlled area remains lighted for [15] minutes after occupant leaves area.

E. Exterior photocells shall be aimed per the manufacturer's installation instructions. Locate and aim to be facing to the north and avoid being blocked by the building architectural features.

F. Provide written or computer-generated documentation on the commissioning of the system including room by room description including:

1. Sensor parameters, time delays, sensitivities, and daylighting set points.

2. Sequence of operation, (e.g. manual ON, Auto OFF. etc.)

3. Load Parameters (e.g. blink warning, etc.)

G. Re-commissioning – After 60 days from occupancy re-calibrate all sensor time delays and sensitivities to meet the Owner’s Project Requirements. Provide a detailed report to the Engineer / Owner of re-commissioning activity.

3.4 SYSTEM TRAINING

A. The Contractor shall provide instruction to the Owner's Representative with regard to use and operation of the system. Obtain signed receipt from Owner's Representative that instruction has been given.

B. The lighting control system's manufacturer shall supply at least one (1) service technician after all systems have been tested and in full operation as described above to assist the installing electrician to demonstrate and instruct the Owner's Representative on the operation, programming and any uniqueness of the control system. Minimum time required for Owner instruction of the system is [one (1) eight (8) hour session]. Provide additional instruction and training to the owner to as required to verify the owner is comfortable with the system operation. Time of demonstration and instruction to be at Owner's convenience during normal working hours and shall be scheduled a minimum of ten working days prior.

3.5 WARRANTY

A. Provide a five year complete manufacturer’s warranty on all products to be free of manufacturers’ defects.

3.6 MAINTENANCE

A. Spare Parts:

1. Provide the following spare parts/components to be used for the owner's maintenance. The spare parts shall be fully tested for proper operation and turned over to the owner in the original boxes:

a. Digital Light Control System

1) (3) Ceiling mounted occupancy/vacancy sensors

2) (1) Digital daylight sensor

3) (2) Isolated relay interfaces

4) (3) Room controllers

5) (2) Digital switches

6) (2) Digital dimmers

7) (1) Scene Control Switch

8) 500' of spare cabling that meets the manufacturers wiring requirements.

END OF SECTION 26 55 00

This page intentionally left blank.

SECTION 27 05 10 - COMMUNICATIONS, GENERAL

PART 1 - GENERAL

1.1 WORK INCLUDED

A. Provide labor, materials, equipment and services to perform operations required for the complete installation and related Work as required in Contract Documents.

B. This section specifies general wiring requirements for systems provided under the Division 27 and Division 28 sections of these specifications.

C. Refer to specific specification sections for additional requirements.

1.2 SUBMITTALS

A. Submit the bill-of-materials and cut-sheets, including head-end equipment, components, cabling, wiring diagrams, labeling formats, termination requirements, manufacturer's installation requirements, and all accessories for each system prior to ordering equipment.

B. Submit O&M Manual with Table of Contents, warranty letters from Contractor, inspections from manufacturer's representative or Contractor's commissioning company, system test reports, copies of training attendance lists, links for additional video training, final directories with labeling formats, official approved submittals, final layout drawings and wiring diagrams for each system.

1.3 GENERAL REQUIREMENTS

A. Provide conduit systems and special systems as called for.

1. Provide conduit, wire way, wire terminations, etc., necessary to provide for system functions.

2. Cross-sectional area of wires shall not exceed 40% of the cross-sectional area of the raceway as called for in the National Electrical Code, Chapter 3 and Chapter 9. The exception to this 40% fill requirement shall be raceways with non-powered communication circuits and raceways without any power-carrying conductors as indicated in NEC Article 770 and Article 800. Cables such as Structured Cable Plant systems (i.e. Category cables) do not apply due to their potential for Power-over-Ethernet (PoE) as called for in their specification.

3. Provide separate circuit power source for each system, as well as for each system's remote power supplies. The source of power shall be connected to the specific branch required by NEC - normal, standby (emergency, critical, life safety, legally-required), or optional standby.

B. Installation and wire insulation types shall be as described by the following NFPA 70 NEC articles:

1. Article 720 - Circuits and Equipment Operating at Less Than 50 Volts

2. Article 725 - Class 1, Class 2, Class 3 Remote Control, Signaling, & Power-Limited Circuits

3. Article 727 - Instrumentation Tray Cable

4. Article 728 - Fire Resistive Cable Systems

5. Article 750 - Energy Management Systems

6. Article 760 - Fire Alarm Systems

7. Article 770 - Optical Fiber Cables

8. Article 800 - Communications Circuits.

9. Article 820 - CATV & RF Distribution Systems

10. Article 830 - Network-Powered Broadband Communications Systems

11. Article 840 - Premised-Powered Broadband Communications Systems

C. Open wiring methods:

1. Where allowable by both Code and these Contract Documents, special systems wiring may be installed without conduit.

2. Open wiring, low voltage wiring circuits 50V and under shall:

a. Be adequately supported using an approved method when installed horizontally above accessible ceilings or run exposed in unfinished areas.

b. Be run in wall cavity or surface metal raceway where no access is available to wall cavity, in finished areas.

c. Be installed in conduit when installed vertically in Mechanical Rooms from panels and devices up to ceiling.

d. Be installed in conduit in all cases not specifically covered by the above cases, or where subject to physical damage.

e. Have the proper insulation and meet the requirements of NEC Article 300.22(C) when installed in plenums or other spaces used for environmental air.

3. Approved methods of support for open wiring include:

   a. Communication systems and other systems using Structured Cabling, Category or Fiber Optic cabling:

      1) Cable tray system or J-hook system, as called for on the Documents.

   b. Systems using other types of cabling:

      1) Bridle rings, D-rings, or other approved methods where allowed by the manufacturer and elsewhere in these Contract Documents.

   c. Refer to each specification section for additional requirements.

D. Identification:

1. Provide standard-compliant color coding and labeling of cable jackets, wires insulation, ports-outlets, terminations, and components.

2. Where no standard exists, and provide consistent color code wiring and identify with permanently attached number to each end of each wire, except where color coding is prohibited to meet UL burglary protection requirements.

3. Refer to each specification section for additional requirements.

E. Termination:

1. Provide the specific terminations required for each system into the specified panel and enclosure system. Systems with specific requirements include, but are not limited to:

   a. LAN copper and fiber cable plants

   b. RF distribution coaxial cable plants

   c. Theatrical network and DMX systems

   d. Pro-Sound digital networks, snakes and XLR connections

   e. LAN connections for Security, VoIP, IP Paging, and Architectural Lighting systems

   f. Traditional analog punch down blocks for POTS, analog voice and paging systems, and other systems.

2. Where no specific requirements are called for by industry standards, the manufacturer or the Contract Documents, wires shall be terminated on screw type insulated terminal blocks with metal terminal cabinets.

F. Wiring Diagrams:

1. Install systems in accordance with manufacturer's certified correct wiring diagrams.

2. Provide record drawings for each system, with wire identification, numbers and colors, as installed.

PART 2 - PRODUCTS

2.1 MAKE AND SERVICE

A. Provide devices and equipment by an established manufacturer for respective systems. All devices and equipment for which there is a listing shall be UL listed and FM approved.

B. Provide system equipment and devices of one manufacturer who maintains a competent service organization and who shall be prepared to offer a service contract for maintenance of the respective system.

C. Unless noted otherwise, provide three (3) service organization inspections for each system at equal intervals during the warranty period following final acceptance. Correct defects found in the system at the time of these inspections. Re-test and resubmit test reports with repairs noted.

2.2 CIRCUIT INTEGRITY (TYPE CI) AND CIRCUIT INTEGRITY IN CONDUIT (TYPE CIC) CABLE SYSTEMS

A. Type CI (or Type CIC, as called for) cabling system intended for all life safety communication systems, including but not limited to: Mass Communication Systems, Emergency Communication Systems, Voice EVAC Systems, Fire Alarm Systems, Emergency Standby Power Generation and ATS communication and control circuits, Critical Operations Systems, Fire Pump Control Circuits, Smoke Control Circuits, etc.

B. Cable system shall be a manufactured system rated for two (2) hour fire rating minimum and be NRTL tested for such. NEC FPLR Standard System shall be rated 600V, continuous 90°C minimum.

C. Conductors shall be copper, with thermoset elastomer insulation, surrounded by low-smoke zero-halogen, flame-retardant polyolefin jacket with conductor size and rating markings labeled.

D. Insulation assembly shall be flexible, and made of and material that changes to an inflexible 2-hour rated assembly when exposed to high temperatures.

E. Provide sizes and quantities as required by the manufacturer.

F. Provide supports at 24-inches on center above 7'-0" AFF, and 18-inches on center below 7'-0" AFF, per the NEC Article 760. Manufacturer's support components shall be steel and fire rated, and secured to fire rated building structure.

Utilize manufacturer kits for entry into boxes, cabinets, etc. Manufacturer installation instructions, requirements and recommendations shall be strictly followed. Provide identification and color coding at each enclosure, box and junction.

G. Acceptable Manufacturers:

1. Beldon FPLR-CI (or Belden FPLR-CIC, as called for)
2. Approved equal

2.3 SURGE PROTECTION DEVICES (SPD) FOR DIVISION 27 AND DIVISION 28 LOW-VOLTAGE SYSTEMS

A. Provide Type 3 and Type 4 surge protection for all systems with metal conductors entering and exiting the building. Provide connectivity compatible with the system being protected.

B. Gigabit Ethernet Twisted Pair Lightning Surge Protector Modules:

1. Data line twisted pair surge protector module manufactured to protect sensitive electronic equipment from EMP (electromagnetic pulse) or surges in power that can be caused by lightning and other strong changes in electricity.

2. System Compatibility: 10/100/1000 Gigabit Ethernet, PoE, RS-232, RS-422, RS-485, T1/E1, POTS.

3. IP67 accessible aluminum enclosure with screw terminals for 4-Pairs of conductors on an Isolated DC Ground system.

4. Label: UL 497B.

5. System Voltages (Turn-on Voltages): 12VDC (17VDC), 24 VDC (33 VDC), 48VDC (66VDC), 56VDC (77VDC), and 72 VDC (99VDC).

6. Protection:

a. 200A of Telcordia GR-1089-CORE 10/1000 microsecond duration.

b. 10A of IEC 61000-4-5 Lightning 8/20 microsecond duration.

7. Make: Similar to PolyPhaser IXG-05 high speed data line lightning surge protector.

C. 10-Twisted Pair, Lightning Surge Protector Modules:

1. Tel-Data line twisted pair surge protector module manufactured to protect sensitive electronic equipment from EMP (electromagnetic pulse) or surges in power that can be caused by lightning and other strong changes in electricity.

2. System Compatibility: Ethernet, PoE, RS-232, RS-422, RS-485, T1/E1, POTS.

3. IP67 accessible aluminum enclosure with screw terminals for 10 Pairs of conductors on an Isolated DC Ground system.

4. Label: UL 497B.

5. System Voltages (Turn-on Voltages): 12VDC (17VDC), 24 VDC (33 VDC), 48VDC (66VDC), 56VDC (77VDC), and 72 VDC (99VDC).

6. Protection: 100A of Telcordia GR-1089-CORE 10/1000 microsecond duration.

7. Make: Similar to PolyPhaser IX-10DC24-IG data line lightning surge protector.

D. CATV and RF Distribution Lightning Surge Protector Modules:

1. Coaxial line surge protector module manufactured to protect sensitive electronic equipment from EMP (electromagnetic pulse) or surges in power that can be caused by lightning and other strong changes in electricity.

2. System Compatibility: HF, UHF, VHF, Industrial Monitoring, Amateur Radio.

3. IP67 aluminum enclosure with F-connector terminals for input and output coaxial conductor.

4. Label: UL 497B.

5. Impedance: 50 ohm

6. Frequency Range: 30kHz - 1.2GHz

7. System Voltage (Turn-on Voltage): 48VDC (300VDC).

8. Insertion Loss: 0.1 dB

9. Protection:

a. 20kA, 1.5kW, 120 micro-Joule through-put

b. Dual protection DC blocking capacitor with Gas Discharge Tube.

10. Make: Similar to PolyPhaser 098-1013G-A CATV and RF line lightning surge protector.

PART 3 - EXECUTION

3.1 INSTALLATION

A. Provide complete installation in a neat and workmanlike manner including all accessories and appurtenances for a complete operating system, including equipment mounting backboards, power supplies, wiring, etc.

B. Each system installation shall be supervised, tested, adjusted and approved by authorized representative of the manufacturer of the system devices and equipment.

C. Provide written statement from the authorized representative of the manufacturer of the system devices and equipment that the completed system has been inspected and tested and is approved.

D. Riser and wiring diagrams are not intended as final installation drawings but only as a guide for bidding. Install system based on final wiring drawings prepared by the manufacturer of the system.

3.2 WIRING

A. Wire sizes shall be as recommended by the system manufacturer.

B. Provide the cable plant system required for a complete and operating system for each system called for. Cable plant systems are generally defined as the entire end-to-end pathways, conduits, duct banks, ENT inner ducts, sleeves, cabling, wiring, and the associated supports, outlets, patch panels, termination equipment, patch cords, racks, cabinets, enclosures, labeling and testing.

C. #14 AWG wire, minimum unless otherwise called for.

D. #12 AWG wire, minimum for alarm signal circuits and all power supplies.

E. Provide #20/2 copper minimum twisted and shielded with overall jacket for audio frequency circuits. Shield shall be Mylar backed aluminum foil with drain wire, or copper braid. Do not provide spiral wrap shielding.

F. Provide structured backbone and horizontal systems for copper and fiber optic cable plant as called for; refer to the LAN specification section for additional requirements, where applicable.

G. Provide HDMI and USB cable plant systems as called for; refer to the AV specification section for additional requirements where applicable.

H. Provide coaxial and fiber optic cable as called for; refer to the video and RF distribution specification section for additional requirements where applicable.

I. Provide security cable plant system as called for; refer to the CCTV Surveillance, Access Control, Intrusion Detection, and Security Management specification sections for additional requirements, where applicable.

J. Do not install low level lines such as microphone wires in same conduit with high level lines such as speaker wires.

K. Provide fire alarm cable plant system as called for; refer to FA system specification section for additional requirements, where applicable.

L. All final wire connections and terminations shall be performed by an authorized representative of the equipment manufacturer who is regularly engaged in, and experienced in this type of work. Subcontracting this work to others is not acceptable.

3.3 CIRCUIT INTEGRITY (TYPE CI) AND CIRCUIT INTEGRITY IN CONDUIT (TYPE CIC) CABLE SYSTEMS

A. Provide Type CI (or Type CIC, as called for) for all life safety communication systems, including but not limited to: Mass Communication Systems, Emergency Communication Systems, Voice EVAC Systems, Fire Alarm Systems, Emergency Standby Power Generation and ATS communication and control circuits, Critical Operations Systems, Fire Pump Control Circuits, Smoke Control Circuits, etc.

B. Provide sizes and quantities as required by the manufacturer.

C. Provide supports at 24-inches on center above 7'-0" AFF, and 18-inches on center below 7'-0" AFF, per the NEC Article 760. Manufacturer's support components shall be steel and fire rated, and secured to fire rated building structure. Utilize manufacturer kits for entry into boxes, cabinets, etc. Manufacturer installation instructions, requirements and recommendations shall be strictly followed. Provide identification and color coding at each enclosure, box and junction.

END OF SECTION 27 05 10

SECTION 27 21 00 - LOCAL AREA NETWORK SYSTEM

PART 1 - GENERAL

1.1 WORK INCLUDED

A. Provide labor, materials, equipment, services, etc. for a complete functional Local Area Network (LAN) and related work as required in the Contract Documents.

B. The systems to be provided shall be for a switched LAN environment. The system shall hereafter be referred to as the Data Network System.

C. Basic Intent:

1. Located throughout the building as shown on the drawings, are places where computers and associated equipment are intended to be placed and connected to the network for the purposes of utilizing common resources.

2. The telecommunications rooms for the data network in the building(s) are located as shown on the drawings.

3. Located in various other places are additional Telecommunication Rooms. It is intended that these be connected with the Main Telecommunication Room by a fiber optic cable backbone and 25 pair copper backbone cables. From each of these locations, data cable is to be run to the data jacks where computer equipment is connected.

4. Fiber connector housings shall be used as termination points for all fiber optic cabling. Provide backbone cabling between telecommunication rooms as indicated.

5. Patch panels shall be used as termination points for all data cables. Fiber connector housings shall be used as termination points for all individual fiber cables in telecommunication rooms.

D. Description of System:

1. The system shall include the items listed below, as described herein and as indicated on the Contract Documents:

a. Data network shall be compatible with existing network configuration and characteristics.

b. Campus service to the building(s).

c. Building Main Distribution Frame (MDF) for service entrance and distribution.

d. Intermediate Distribution Frame (IDF) as indicated for cabling distribution.

e. Backbone wiring from entrance facility to the MDF and from MDF to the IDFs.

f. Complete raceway system (cable tray, J hooks, conduit) for cabling distribution as noted on Construction Drawings.

g. Grounding of all racks, raceway and equipment.

h. Power for the telecommunication rooms.

1.2 TELECOMMUNICATION ROOMS

A. Each telecommunication room shall be furnished with 3/4 in. plywood backboard, from 6" above finished floor to 8'-6" above finished floor on all walls, with the plywood backboard painted with two (2) coats of grey fire-resistant paint (UL/ASTM Class A), all surfaces.

1. ANSI/TIA/EIA Telecommunications Building Wiring Standards.

2. IEEE Telecommunications Standards.

3. BICSI Methods Manuals.

4. NFPA 70: NEC

1.3 QUALITY ASSURANCE

A. Work shall be as specified herein and it shall be neat and orderly installation. All methods of construction, details of workmanship that are not specifically described or indicated in the contract documents, shall be subject to the control and approval of the Owner's Representative.

B. Unless specified elsewhere, standard factory inspection and operational tests will be acceptable.

C. Installation shall be accordance with NFPA 70 (National Electrical Code), TIA/EIA, IEEE, IEC, state codes, local codes, and requirements of the Authority Having Jurisdiction.

D. Equipment shall be designed, manufactured, assembled, and tested in accordance with the latest revisions of applicable published ANSI, NEMAIEC, TIA/EIA and IEEE Standards.

E. Each item shall be NRTL tested and listed.

F. The system provider must:

1. Provide equipment from manufacturers for which they maintain a contract, distributorship, are an agent, or other formal arrangement for which documentation can be produced showing authority to sell and service the equipment in this territory.

2. Demonstrate that they have successfully installed these systems, utilizing their standard products, for a period of five (5) years.

3. Maintain adequate spare parts inventory to provide both normal and emergency service.

4. Employ service technicians who are trained in accordance with the systems manufacturer's recommendations.

5. Own and demonstrate proficiency in the use of the required test equipment, tools, etc. for the proper installation, set-up, testing and maintenance of the system. If requested, must provide a listing of tools and/or equipment and where appropriate, certifications in the proper training and use of the tools and/or equipment.

6. Any system being extended or connected to an existing system shall be tested for full functionality prior to beginning work and at the completion.

G. Contractor Qualifications:

1. The cable installer shall provide documentation and references from three (3) similar installations installed within the previous two (2) years within a 60 mile radius.

2. Contractor shall be trained through the Panduit certification for horizontal cabling and Corning Network of Preferred Installers (NPI) for fiber cabling.

1.4 SUBMITTALS

A. Provide the following in a single clear and organized submittal. Package shall be submitted as specified in:

1. Manufacturers catalog sheets, specifications and installation instructions for all system components.

2. Detailed description of system operation.

3. Itemized list of all features and functions.

4. Dimensioned drawings of all system control cabinets and layouts for all equipment rooms.

5. Wiring diagrams showing typical connections for equipment.

6. Contractor certification and qualifications.

7. Riser diagrams showing all components, devices and interconnecting cable types.

8. List of three (3) installations of equivalent or larger systems that have been installed within the past two (2) years and have been operating satisfactorily for a minimum of one (1) year.

9. Warranty information.

10. System test reports.

11. Calibration of Cat 6A test sets. Calibration shall be completed once per year with certification of calibration provided.

12. Provide scaled elevation and plan drawings indicating walls, data racks, patch panels, wire management, cable trays, power strips, door swing, etc. for each cable closet/room.

1.5 SYSTEM DESCRIPTION

A. Provide a complete and fully operational state of the art Local Area Network (LAN) system as described herein and indicated on the contract documents. Include any and all interface equipment to supply a complete network with complete equipment connections necessary to form a complete "turnkey" network system as outlined in these specifications.

B. The complete system shall include, but is not limited to, the following:

1. Equipment Room build-out.
2. Telecommunications Room build-out.
3. Equipment cabinets and racks.
4. Wire management.
5. Horizontal cabling.
6. Fiber optic backbone cabling.
7. Modular jacks, backboxes and faceplates.
8. Terminations and testing.
9. Raceways, pathways, cable tray, sleeves, pull boxes.
10. Firestopping.

C. Owner shall provide the network electronics and patch cables.

1.6 WARRANTY

A. All cable plant parts shall be warranted to the owner for a period of twenty-five (25) years as a complete end-to-end system.

B. Warranties shall commence upon final acceptance of the system.

C. Contractor to submit Cat 6A cable records to Panduit for warranty. Warranty shall be from Panduit and cover 25 years.

D. Contractor to submit fiber cable records to Corning for warranty. Warranty shall be from Corning and cover 25 years.

PART 2 - PRODUCTS

2.1 HORIZONTAL CABLE

A. Augmented Category 6A UTP Cable:

1. Initially, the manufacturer shall perform qualification tests on each cable. These tests shall be performed in accordance with the latest revision of ANSI/TIA/EIA 568-C.2 standard prior to shipment.

2. Date of Manufacture: Cable shall be a maximum of one (1) year old, from date of manufacture when installed.

3. Cable shall be plenum rated, 4 pair, 100 OHM, 23 AWG.

4. Cable shall meet all requirements of FCC 68, the latest revision of the TIA/EIA 568B-C.2 and Addenda.

5. Cable shall have green colored thermoplastic jacket with overall diameter not to exceed .24 in. x .24 in.

6. Pulling tension shall be rated for 25 pounds minimum.

7. Cable shall be able to withstand a minimum bend radius of 1.2 in. at -20ºC without insulation cracking.

8. Cable shall be color coded in accordance with the latest revision of the TIA/EIA T568B polarization sequence.

9. Cable shall not exceed maximum length of 90 meters.

10. Provide a printed report documenting testing based on ANSI/TIA 568-C.2 tested at 500 MHz. Testing parameters as follows:

    a. Less than 21.0 ohm per 100 m DC resistance.

    b. Return loss > 10.0 dB/100m at 500 MHz.

    c. Insertion loss < 43.8 dB/100m at 500 MHz.

    d. Near end cross talk (NEXT) > 26.7 dB at 500 MHz.

e. Power Sum - near end cross talk (PS-NEXT) > 23.8 dB at 500 MHz.

f. Attenuation to cross talk ration far end (ACRF) > 10.2 dB at 500 MHz.

g. Power sum - attenuation to cross talk ratio (PS-ACRF) > 7.2 dB at 500 MZz.

h. DC resistance unbalance between any two (2) conductors of any pair shall not exceed 3%.

i. The capacitance unbalance of any pair to ground shall not exceed 65.6 pF per 100 meters.

j. Delay < 490 ns at 100MHz.

k. Delay skew < 44 ns at 100MHz.

l. Cable shall be ANSI/TIA/EIA-568-C.2 augmented Category 6 (Cat 6A) compliant. The cable shall be tested and characterized by the manufacture to 500 MHz.

11. Acceptable Manufacturers:

a. Panduit Tx6a
b. General Cable Gen Speed 10
c. Comm Scope

B. Single Mode Fiber (Indoor/Outdoor):

1. Maximum Attenuation per KM:

a. 1310 nM- 0.5

b. 1550 nM - 0.5

2. 1310/1550 nM.

3. Shall be tight buffer, plenum rated, indoor-outdoor breakout style.

4. Core Type: Single Mode.

5. Core Diameter: 8.3 Microns.

6. Clad Diameter: 125 Microns.

7. Minimum bend radius shall be 2 inches or 10 times the diameter, whichever is larger.

8. Strength members shall be FGE/Aramid yarn.

9. Shall meet requirements for plenum and vertical tray cable specifications of the NEC.

10. Provide number of fibers/cable as indicated in riser diagram on Contract Drawings.

11. Shall have individual fiber tube colors per TIA/EIA-598 and an overall yellow jacket.

12. Shall meet ANSI/TIA-568.3-D cabling specifications

13. Acceptable Manufacturers:

    a. Indoor: Corning Clear Curve
    b. Indoor/Outdoor: FREEDM Loose tube Gel-Free Cable, (12-288)Fiber, Riser, Single-mode (OS2) with part number - XXXEUF-T4101D20; where XXX is the fiber count.
    c. Outdoor: ALTOS Cable with FastAccess Binderless Technology, Gel-Free Cable, (12-72) Fiber, Ultra Fiber (OS2) with part number XXXZU4-T4F22D20; where XXX is the fiber count.

C. Copper (voice):

1. 24 AWG category 3 balanced twisted pair cables.

    a. Minimum 25-pair. Refer to contract drawings for final quantities.

    b. Terminate on 110 block within IDF.

    c. Route 25 pair from 110 block to back of patch panel.

2. Acceptable Manufacturers:

    a. Comm Scope

    b. Prysmain Group

2.2 PATCH PANELS

A. UTP Cable Patch Panels:

1. All panels should consist of a faceplate, mounting, hardware, isolation bushings, connector assemblies and labels for all ports.

2. Provide patch panels in each enclosure or rack to which the cable is to be terminated.

3. Patch panels shall be mounted in standard 19 in. racks/cabinets.

   a. Contractor shall provide Panduit CJ6X88TG for Cat 6A terminations 48-port patch panels having wiring configuration specified with insulation displacement connectors on the back and 8P8C universal modular jacks on the front. No substitutions allowed.

   b. Contractor shall provide quantity of patch panels to terminate all UTP cable. There shall be a minimum of 25% spare capacity for future installation.

4. Jacks shall be Panduit CJ6X88TG for Cat 6A terminations, T568A only. No substitutions allowed.

5. Panels shall have factory labels for each port.

6. All cables are to be terminated per EIA/TIA 568A standards and dressed in a neat workmanship way. Match the Owner's standard configuration.

7. Modular jacks shall be mounted on PC boards to offer low insertion and NEXT loss.

8. Provide grounding screw assembly with serrated head screw and manufacturer recommended connection to the associated rack.

9. Shall exceed EIA/TIA-568, UL1863 and FCC Part 68 performance specified.

10. Acceptable Manufacturers:

    a. Panduit T568A 48-position patch panel.

B. Fiber Optic Connector Housing

1. Provide fiber optic rack mounted enclosure in where fiber optic cable is to be terminated.

2. Provide Duplex LC connectors housed within shuttered panels. Provide quantity of ports to terminate all strands of the fiber optic cable with additional 25% spare ports.

3. Shall mount in standard 19 in. rack and be constructed of 16 gauge steel and have gasketed openings and hinged door for easy access.

4. Provide wire management below and in rear of patch panel.

5. Patch panels to have modular ports with 12 minimum ports.

6. Acceptable Manufacturers:

a. Corning:

1) Rack Mounted Housing in 2U and 4U corresponding to the Closet Connector Housing (CCH) part numbers CCH-02U and CCH-04U respectively.

2) Closet Connector Housing (CCH) compatible Pigtail Cassette, loaded with CCH panel and factory-terminated pigtails, LC Duplex, SM/UPC, single fiber splicing with part number - CCH-CSXX-A9-P00RE; Where XX is the panel fiber count.

3) Closet Connector Housing (CCH) Panel, 12 F, LC Duplex Shuttered, Single-mode (OS2).

2.3 OUTLETS AND CONNECTORS

A. UTP Outlets/Connectors:

1. Physical Specifications:

a. Shall be 8 position connector compatible with the cable characteristics.

b. Shall be modular and snap-in to user configurable faceplates for future retrofits meeting durability requirements specified in the latest revision of the CEI/IEC standard.

c. Shall be IDC type suitable for eight 22-24 AWG wires with a gas-tight connection.

d. Each contact surface shall have at a minimum, copper alloy with 50 micro-inches gold over nickel and a minimum contact force of 100g.

e. Conductors shall be separated and aligned internally by jack comb.

f. Shall have easy to read 568A/B color scheme to prevent termination errors.

g. Wired in accordance with TIA/EIA polarization sequence specified in Patch Panel section of this specification.

h. Transmission characteristics shall meet the requirements for the UTP cabling specified.

i. Minimum durability shall be 1000 connecting cycles.

2. Acceptable Manufacturers:

a. Panduit CJ6X88TG** (** denotes color)

B. Fiber Optic single mode Outlets/Connectors

1. Physical Characteristics:

a. Shall be LC duplex type with insertion release mechanism.

b. Shall terminate up to 125 micron fiber.

c. Shall meet dimensional criteria of the latest revision of ANSI/EIA/TIA-568.3-D.

d. Typical outlet box shall be sized to insure minimum bend radius and store 1 meter of fiber cable.

2. Transmission Characteristics:

a. Maximum loss of 0.3 dB per pair.

3. Splicing shall be by pigtail fusion in cassettes.

4. Acceptable Manufacturers:

a. Corning Optical Communications indoor Riser Fiber Cable and Closet Connector Housing (CCH) hardware is the preferred and recommended products

b. Rack Mounted Housing in 1U, 2U and 4U corresponding to the Closet Connector Housing (CCH) part numbers CCH-01U, CCH-02U and CCH-04U respectively.

c. Closet Connector Housing (CCH) compatible Pigtail Cassette, loaded with CCH panel and factory-terminated pigtails, in 6, 12 and 24 Fiber, LC Duplex, SM/UPC, single fiber splicing with part number - CCH-CSXX-A9-P00RE (Where XX is the panel fiber count)

d. Wall outlet fiber termination FuseLite® Connector LC, 900 µm Tight-Buffered, Single-mode (OS2 UPC) with part number SOC-LCU-900-SM

2.4 COLOR CODING

A. Cable outer jacket shall follow the color coding scheme as follows. Jacket color shall be continuous.

B. Copper Cable:

1. Data, Voice and Wireless Communication:

a. Category 6A - Green

C. Fiber Optic Cable:

1. Backbone Cabling:

a. Single Mode - Yellow

2. Horizontal Cabling:

a. Single Mode - Yellow

2.5 DISTRIBUTION ENCLOSURES/RACKS

A. All enclosure/racks shall be properly sized and of the proper quantity to house all of the required components and 25% spare space capacity. Provide grounding stud for each vertical rack.

B. Label each rack/enclosure designating it per the latest TIA/EIA standard:

1. Adhered plastic electronic printed label with 1/2" high lettering minimum.

2. Mount to top and bottom of each rack/enclosure.

C. Enclosed, Floor Mounted Cabinet:

1. Steel framed, smoked Plexiglas door with lock (keyed to the Owners standard), full length piano hinge and field adjustable swing.

2. Steel Rear Door with Lock (lower half vented).

3. Two (2) eight position vertical mounted power strips.

4. Fan Assembly - Suitable top mounted fans (two minimum) for an ambient temperature of 85°F.

5. Wire management brackets.

6. Adjustable front and rear mounting rails.

7. Adjustable 19 in. wide mounting rails. Depth to accommodate the intended equipment (32 in. minimum).

8. Color black.

9. Verify swing of door in the field prior to ordering.

10. Unit width shall accommodate racking, power strips and cable management.

11. In locations requiring two or more enclosures, side panels shall be removed and cabinets shall be bolted together allowing access between cabinets.

D. Open, Floor Mounted Racks:

1. Nominal size shall be 19 in. wide x 7 ft. high x 20 in. (minimum) deep. Rated for 2000 lb. minimum. Depth to match the intended equipment.

2. Rack shall be constructed of 6061-T6 aluminum extrusion, with EIA = 3 in. x 1.265 in. channel, 1/4 in. thick flange.

3. Provide base angles and top cross bars.

4. The back of rack shall have wire management panels and cable tray to wall.

5. Rack shall have baked enamel finish.

E. Enclosed, Wall Mounted Cabinet:

1. Standard 19 in. wide, 24 in. deep cabinet.

2. Height as required.

3. 16 gauge cold rolled steel.

4. Rack shall have locking front door.

5. Ventilated side panels.

6. Two (2) six position power strips.

7. Rack construction shall match freestanding.

8. Racks shall have dual piano hinges to allow access to front and rear.

9. Provide vertical and horizontal wire management.

10. Verify swing of door in field prior to ordering.

F. Floor Mounted Server Racks (Four Post Racks):

1. Racks shall have four vertical posts with top/bottom framing and be as specified above for open, floor mounted racks.

2. Racks shall be provided where shown on the drawings or identified in the equipment schedule.

G. Equipment Shelves:

1. Provide quantity of equipment shelves as indicated.

2. Shelves shall be made of .09 in. aluminum and shall support up to 30 lbs. on each side. All mounting hardware shall have baked enamel finish.

H. Acceptable Manufacturers:

1. Chatsworth
2. Mid-Atlantic
3. Great Lakes

2.6 CABLE MANAGEMENT

A. All racks are to be provided with cable management hardware to insure a neat, functional system when complete. Racks shall as a minimum, include the following:

1. PVC construction; duct fingers to manage cabling; color to match enclosure.

B. All racks shall have 8 in. wide vertical full height cable management, including cover, front and rear, on both sides of the rack.

C. All racks shall have 2RU space horizontal full width cable management, front and rear, above and below each patch panel and piece of equipment.

D. Cabinets shall have 1RU space horizontal panels, front and rear, above and below each patch panel and piece of equipment.

E. All data distribution frame plywood backboards shall be provided with vertical and horizontal wire management with capacities to house all possible future cabling and patch cords for a neat and orderly installation.

F. Acceptable manufacturers:

1. Panduit

2.7 LABELING

A. General:

1. Labeling system and structure shall match the Owners existing. System shall provide as built final conditions for each cable, port, panel, rack, etc. and utilize MS Excel or approved equal documentation. Provide electronic copy of labeling documentation to the Owner nearing completion of construction to support the service activation phase; provide a minimum of 2 weeks prior to required activation time. It shall also be included as part of the O & M.

2. Each label shall contain the Telecommunication Room designated, the room number and the port number in the room. Verify color of label and size of font prior to completion. Provide samples as requested.

3. Labels shall correspond to the room/names/numbers upon completion of the project. Contractor shall not necessarily utilize existing room/names/numbers or those indicated on the blueprints.

4. Label each rack and patch panel with 1 in. high lettering, black on white, adhered electronically printed plastic type label with labels at top, bottom, front and back.

5. Firestop used in vertical riser and horizontal conduit sleeves penetrating ceilings and floors shall be labeled. Provide and install labeling at each penetration including penetration type with UL listing used, material used, date of install, and name of installer.

6. Cables pulled for future use shall be labeled as such.

B. Patch Panel

1. Individually label all patch panel ports. Port numbers shall match opposite end outlet/port number.

C. Outlets

1. Individually label all patch panel ports. Labels shall be installed in a workman-like manner and fit completely in the recessed area of the labeled location.

2. Contractor shall utilize adhered labels at poke-thru locations and any other locations that do not have a label location.

D. Cable

1. Fiber Optic:

a. Individually label fiber optic cables at each termination point indicating building, destination room, rack number, panel number, port number, strand number and strand color.

b. Each strand color shall match a specific fiber termination number in each closet, i.e. blue - fiber 1, orange - fiber 2, green - fiber 3, etc.

c. Cable label shall be adhered electronically printed plastic type with cable designation fully visible.

2. Copper

a. Specifically label cables at each termination point indicating the building, destination room, rack number, panel number and port number.

2.8 UTP CABLE TESTER

A. Contractor shall utilize Fluke DSX 5000 tester or approved equal. Provide adapters for specified cables.

PART 3 - EXECUTION

3.1 INSTALLATION

A. Cable:

1. Provide horizontal UTP cable to each communication outlet jack from respective equipment/telecommunications room patch panel as called for on contract drawings.

2. Provide single-mode fiber optic cable to each fiber jack from respective equipment/telecommunications room as called for on contract drawings.

3. All risers, and wiring concealed in walls or soffits, shall be installed in metal conduits.

4. All cable above accessible ceilings shall be installed in cable tray. If a J-hook system is called for on the contract drawings it shall be spaced such that supports are 3 ft. O.C.

a. If a J-hook style system is provided it shall be for 30 cables or fewer. Greater than 30 cables must be within a cable tray system.

5. Provide wire management and Velcro cable wraps every 24 in. throughout closets.

6. Wiring/cabling shall be installed in accordance with the manufacturer's recommendations. If the manufacturer recommends larger wire sizes, they shall be provided. However, smaller sizes or lower cable categories are not acceptable.

7. All Contract Documents are schematic. The system supplier shall incorporate their wiring requirements on the system drawings. The Contractor in conjunction with the system manufacturer shall be responsible for complete wiring requirements and conduit sizes.

8. Install UTP cable in accordance with latest revision of TIA/EIA 568 standards.

9. The Contractor shall be responsible for replacing all cables that do not pass required bandwidth and throughput tests.

10. All raceways and closets shall be installed in accordance with latest revision of TIA/EIA-569.

11. All cables shall be labeled in accordance with latest revision of TIA/EIA 606 and these specifications.

12. All horizontal cables shall be terminated in patch panels at the distribution frames, and at the UTP jack at the telecommunications outlet.

13. Maximum length shall be 90 meters.

B. Terminations:

1. All terminations shall be made by a manufacturer's trained representative.

2. Use termination kits for fiber and UTP that are approved by the manufacturer of the cable.

3. All backbone cable shall be terminated in a fiber connector housing and all connections between horizontal and backbone cables shall be through cross connect cable.

C. Equipment and Devices:

1. Install all devices where shown on drawings. Provide all necessary conduit outlet boxes, junction boxes, supports, etc. Verify all required box sizes with the system supplier and coordinate with bending radius needs. All devices shall be modular for future moves and changes.

2. Install all equipment in specified 19 in. racks/cabinets leaving minimum 30 in. of access space on sides and back of rack and 36 in. in front of rack.

3. Provide all power outlets required for system operation but not shown on plans.

D. Raceways:

1. Minimum size raceway shall be 1 in.

2. Minimum backbox size for telecommunications outlet locations shall be two-gang with raised cover; no single-gang boxes allowed.

3. Provide no greater than 180° in bends or 100 linear feet without pull box in any raceway.

4. No flexible conduit raceways allowed unless explicitly approved by CIT.

E. Data Network Ground System:

1. Provide grounding system for all equipment rooms and telecommunication rooms as called for in Specification Section 260526.

F. Telecommunications Rooms:

1. Provide 3/4 in. x 4 ft. high continuous plywood backboard with two (2) coats of medium gray fireproof paint in telecommunications rooms.

2. Coordinate with other trades to avoid services being installed above telecommunications racks.

3.2 TESTING

A. Copper Cable: System supplier shall channel test end-to-end each permanent link connection using latest 500 MHz for Cat 6A 1000 Mbps IEEE testing procedure. Tester must conform to the latest standards at the time of testing not time of bid and be Fluke DTX-5000 with latest software version, or approved equal. Testing shall be performed by a technician trained with the specific testing equipment.

B. Fiber Optic Cable: Provide an OLTS test for all fiber optic cable and connections per latest IEEE and ANSI accepted procedures and OTDR test for OSP. Test shall be by Fluke or approved equal; All software to view test results shall be readily available and free.

C. Replace any cables and connectors that do not meet or exceed standards referenced and stated herein and then tested. Testing shall be end-to-end / port-to-port for each cable.

D. Test equipment shall be in good condition and working order, calibrated within one year of its use and utilize leads without twisting and kinks. Unit calibration shall be in accordance with Level III Field Tester per ANSI/TIA 1152.

E. A representative of the end-user will select a random sample of 5% of the installed links. The representative (or his authorized delegate) shall test these randomly selected links. The results obtained shall be compared to the data provided by the installation contractor. If more than 2% of the sample results differ in terms of the pass/fail determination, the installation contractor under supervision of the end-user representative shall repeat 100% testing at no additional cost. Cables and connectors that do not pass shall be replaced and retested until acceptable results are obtained.

F. Test Reporting:

1. The field testing shall be accurately documented for submission, inclusion in O&M Manuals and for Owner future use.

2. Test reports shall include data directory table cross-referencing room numbers and cable numbers with the test report. Post copies of directory at telecommunications room location.

3. Report shall utilize electronic Windows based documenting with a hard and electronic copy provided to the Owner.

4. The report documentation for each cable test shall include the following as a minimum:

   a. Project name.

   b. Test equipment manufacturer and model number, and last calibration date.

   c. Date and time of the test.

   d. Patch panel identification.

   e. Cable identification.

   f. Cable type.

   g. Pass/Fail: Pass indicating meeting or exceeding the identified criteria or standard (whichever more stringent) for all parameters. Fail indicating test not meeting identified criteria for one or more parameters.

   h. Test pass criteria.

   i. Cable length.

   j. Propagation delay and attainable bandwidth.

   k. List of tested parameters with test and allowable values. Any failed parameters shall be noted or highlighted.

5. Test reports shall be submitted to Panduit for the horizontal cabling warranty.

END OF SECTION 27 21 00

SECTION 28 31 02 - ANALOG ADDRESSABLE FIRE ALARM SYSTEM

PART 1 - GENERAL

1.1 WORK INCLUDED

A. Provide labor, materials, equipment and services to perform operations required for the complete installation of a fully operational analog addressable fire alarm system and related Work as described in the Contract Documents.

B. Provide system as approved by local Fire Marshal and the Authority Having Jurisdiction (AHJ). System materials and installation shall be in accordance with the manufacturer's recommendations.

1.2 QUALITY ASSURANCE

A. All methods of construction, details of workmanship that are not specifically described or indicated in the contract documents, shall be subject to the control and approval of the Owner's Representative. Equipment and materials shall be of the quality and manufacture indicated in their respective sections of the specifications. The equipment specified is based upon the acceptable manufacturers listed. Equipment types, device ratings, dimensions, etc. correspond to the nomenclature dictated by those manufacturers. All equipment shall be tested at the factory. Unless specified elsewhere, standard factory inspection and operational tests will be acceptable.

B. Installation shall be in accordance with NFPA-70 (National Electrical Code), NFPA-72 (National Fire Alarm Code), AHJ, state codes, local codes, requirements of authority having jurisdiction and the contract documents. Installer shall be certified in the State of New York for fire alarm installation.

C. Equipment shall be designed, manufactured, assembled, and tested in accordance with the latest revisions of applicable published UL, NFPA, ANSI, NEMA and IEEE Standards. All system equipment shall be compatible and of the same manufacturer.

D. Each item of the fire alarm system shall be listed as a product of a single fire alarm system manufacturer and shall bear the UL Label.

E. System installation shall be under the supervision of an accredited factory representative. Final connections to the FACP, annunciator panel and any other panels shall be by the factory representative.

F. The system provider must:

1. Provide equipment from a single manufacturer for which they maintain a contract, distributorship, are an agent, or other formal arrangement for which documentation can be produced showing authority to sell and service the equipment in this territory.

2. Demonstrate that they have successfully installed these systems, utilizing their standard products, for a period of five (5) years minimum.

3. Maintain a service organization to provide both normal and emergency service. Emergency service must be available 24 hours per day, 365 days per year and staff must be adequate to respond within 2 hours of an emergency call.

4. Have a service location not more than 50 miles from the project location.

5. Maintain adequate spare parts inventory to provide both normal and emergency service.

6. Employ service technicians who are trained in accordance with the systems manufacturer's recommendations.

7. Own and demonstrate proficiency in the use of the required test equipment, tools, etc. for the proper installation, set-up, testing and maintenance of the system. If requested, provide a listing of tools and/or equipment and where appropriate, certifications in the proper training and use of the tools and/or equipment

8. Provide all system programming to deliver a customized system to the Owner ready for use.

9. All system programming is to be completed to the satisfaction of the Owner. If after preliminary use of the system, and/or training, the increased understanding of the system's features and capabilities necessitates reprogramming to any extent, it is to be performed at no additional cost.

10. Provide a minimum of two system inspections/tests each year during the warranty period as described in NFPA 72. Needed and requested system programming changes shall be provided at these times.

11. Warranty period shall be as described elsewhere with two years being minimum. Provide a service contract for the Owner review for two years beyond the warranty period. Warranty shall include all parts, materials, labor, transportation, etc.

12. Any system being extended or connected to an existing system shall be tested for full functionality prior to beginning work. System shall be signed off by Owner/Engineer as fully functional prior to any new work.

1.3 SYSTEM DESCRIPTION

A. The system shall constantly monitor all initiation devices and notification circuits for any abnormalities or alarm conditions. System shall sample/poll each addressable device no less than every 10 seconds.

B. The system operation subsequent to the alarm activation by any initiating device (manual station, automatic detector, sensor, sprinkler flow switch, etc) shall be as follows:

1. All audible alarm notification appliances within corresponding building or designated area shall provide a common audible fire alarm signal until the System Reset Key or the Signal Silence Key is depressed.

2. All visual alarm notification appliances shall flash continuously and synchronized until the system is reset or silenced.

3. The offsite central monitoring station shall be notified automatically until the System Reset Key or the Signal Silence Key is depressed. The municipal box shall be activated notifying the fire department.

4. Shutdown of the corresponding HVAC system equipment shall occur with a supervisory alarm until the system is reset. All fans over 2000 cfm shall be shut down.

5. Activation of all programmed outputs assigned to the initiating device shall occur until the system is reset or the silence key is depressed.

6. The alarm shall be displayed at the local Fire Alarm Control Panel (FACP) and the fire alarm annunciator panel. A printout shall be produced at the FACP.

7. The system alarm LED shall flash on the control panel and the fire alarm annunciator panel until the alarm has been acknowledged/reset. Once acknowledged, this same LED shall latch on. A subsequent alarm received shall flash the system alarm LED on the control panel and annunciator. The LCD display shall show the new alarm information.

8. A pulsing audible alarm tone shall occur within the local building control panel and, where applicable, the fire alarm annunciator panel until the event has been acknowledged.

9. Alarms shall be entered into the system event log history.

C. Any subsequent alarm shall follow the operation described above.

D. The activation by any system smoke detector or sensor shall initiate an alarm verification operation whereby the panel will reset the activated detector and wait for a second alarm activation. If, within a preset time after resetting, a second alarm is reported from the same or any other smoke detector, the system shall process the alarm as described previously. If no second alarm occurs within the prescribed time, the system shall resume normal operation. The alarm verification shall operate only on smoke detector alarms. Other activated initiating devices shall be processed immediately. The alarm verification operation shall be selectable by device.

E. A manual evacuation (drill) switch shall be provided to operate the alarm notification appliances without causing other control circuits to be activated. However, should an actual alarm occur, all alarm functions shall occur as described previously.

F. The system shall have a password(s) to allow the operator to display all alarms, troubles, and supervisory service conditions log history including the time of each occurrence. This shall be able to be viewed from the front of the control panel, annunciator panel or from a computer connected to the FACP.

G. The actuation of the " walk test" program at the control panel shall activate the "Walk Test" mode of the system which shall cause the following to occur:

1. The remote central monitoring station connection shall be bypassed.

2. Only audible and visual appliances shall be operated. Other alarm functions (elevator recall, HVAC shutdown, etc.) shall not be affected.

3. Walk test shall be selectable by circuit or circuits.

4. Actual alarms received during a "Walk Test" shall cause the control panel to go into alarm and override the walk test mode.

5. The control panel shall show trouble conditions.

6. The walk test activation of any initiation device shall cause the audible signals to activate for two seconds or a distinguishable audible.

7. The panel shall automatically reset itself after signaling is complete.

8. The control panel shall automatically return to normal condition if there is no activity on a walk test circuit for a period of 30 minutes.

H. Any momentary opening of an initiating or notification appliance circuit wiring shall cause an audible signal to sound at the Fire Alarm Control Panel and, where applicable, the annunciator panel for four seconds indicating a trouble condition.

I. Elevator Operation:

1. Provide the following equipment as a minimum and as indicated on the drawings:

a. Smoke detection in the elevator equipment room.

b. Smoke detection at each elevator lobby.

c. Smoke detection in the elevator shaft if a smoke hatch.

d. Heat detection in the equipment room and shaft (high and low) if a sprinkler system is in the area. Detectors shall be within 2' of the individual sprinkler heads.

e. Detection devices located in elevator lobbies, elevator hoistways and elevator machine rooms shall be used for elevator recall. Hoistway and equipment room heat detection shall initiate power shut down prior to water flow. Operation shall be in accordance with ASME A17.1, Safety Code for Elevators and Escalators. Signals shall be provided to the elevator controls for main level lobby alarm, any lobby alarm, elevator equipment room alarm and elevator hoistway alarm as a minimum. Provide addressable control modules for the signals to the elevator controls.

J. Alarm initiation of a detector associated with a smoke hatch or fire barrier shall initiate a system alarm. Also, provide connections between the auxiliary contacts on the detectors or addressable control module and the associated smoke hatches and fire barriers such that the smoke hatch or fire barriers will be operated upon its respective detector activation. Provide power supplies, wiring and accessories for fire alarm system and all supervisory functions required for proper smoke hatch [and fire barriers operation.

K. Duct mounted smoke detectors associated with duct dampers shall have an addressable control module to operate the duct damper. In the event of an alarm initiation by the duct mounted smoke detector or the associated air handling unit/fan shut down the duct damper shall be closed. Control wiring shall be provided to shut the damper(s) when the associated air handling unit is not operational. Provide power supplies, wiring and accessories as needed for this operation.

L. Provide wiring and equipment such that alarm initiation of a heat detector located in the elevator machine room and/or the elevator shaft shall provide suitable voltage from the fire alarm control panel to be applied to the shunt trip coil of the elevator's supply circuit breaker. No fire alarm devices except the heat detectors in the elevator machine rooms and shaft shall cause this. Also, alarm initiation of these heat detectors shall initiate the system alarm functions described above. Provide an addressable control module with a Form C contact at the elevator controllers, which shall be normally closed and shall open upon alarm initiation of any of these heat detectors; this contact shall be used to disconnect the battery-powered emergency return unit if so equipped with the use of a relay suitable for the emergency power circuit. Also, provide an auxiliary contact on the main line disconnect switch (four pole unit) and two (2) #12 in conduit to the elevator controller from this contact for the same purpose.

M. Provide a minimum of two Form C contacts at the building's fire alarm control panel. This contact shall activate upon activation of any fire alarm initiating device.

1.4 SUPERVISION

A. The system shall utilize independently supervised initiation device circuits. The alarm activation of any initiation device shall not prevent the subsequent alarm operation of any other initiation device.

B. Notification appliance circuits shall be supervised to indicate an open or short circuit condition.

C. The incoming power to the system shall be supervised so that any power failure must be audible and visually indicated at the control panel and the remote annunciator. A green "power on" LED shall be displayed continuously while incoming power is present. This shall be a trouble alarm.

D. The system batteries shall be supervised so that a low battery condition or disconnection of the battery shall be audibly and visually indicated at the control panel and the remote annunciator. This shall be a trouble alarm.

E. The system shall have provisions for disabling and enabling all circuits individually for maintenance or testing purposes.

1.5 SUBMITTALS

A. Provide a complete system submittal prior to ordering of equipment and installation including but not limited to:

1. Complete equipment list, including quantities.

2. Catalog descriptive literature for all equipment. This shall include a description of the unit, ratings, functions, capability, materials and compatibility with other components.

3. Riser Wiring Diagram showing all equipment, devices, device addresses, connections, control connections, remote notification connection(s), wire quantities and sizes.

4. Floor plan indicating equipment and device locations, addresses, power circuit information with power panel location, notification circuiting, initiation circuiting, control circuiting and any system applicable building characteristics (ceiling heights, structural members impeding detection, etc). Contact the Engineer for an electronic copy of the project floor plans. Engineer logo shall be included in final drawing.

5. Typical Terminal Wiring Diagram for each type of device.

6. Terminal wiring Diagram for all Fire Alarm equipment.

7. Calculations including:

   a. Battery sizing calculations indicating total number of power devices, load associated with each type device, backup period and recommended battery capacity (AH).

   b. Voltage drop calculations with actual equipment loads used to derive battery back-up ampere-hour rating and individual circuit voltage drop (indicate the wire size to be used and the associated voltage drop with the allowed voltage drop) for each circuit.

8. Complete console enclosure and equipment configuration.

9. Contractor shall submit copies of the installation firms license for approval and post a copy of license on the premises where the work is being performed.

   a. Work involving installation of Fire Alarm system components shall be performed by firms currently licensed by the NYS department of State Division of Licensing Services. The supervising personnel shall be NICET level 2 certified.

10. Test reports as called for.

11. Copies of the firm alarm installation firm's current license. The contractor shall also post a copy of the license on the premises where work is being performed.

B. If required by the Authority Having Jurisdiction (AHJ) provide a submission of all requested information for review and comment by the AHJ. All AHJ comments shall be incorporated and resubmitted until approved.

C. Test reports at the completion of the project. Testing shall be of all system devices, equipment, circuits, features and functions.

PART 2 - PRODUCTS

2.1 ACCEPTABLE MANUFACTURERS

A. The project fire alarm system shall comply with and be in accordance with the drawings and specifications. All system equipment and materials shall be of the same manufacturer unless otherwise indicated. System and component acceptable manufacturers include the following unless otherwise indicated:

1. FCI E3

2.2 FIRE ALARM SYSTEM

A. The fire alarm system shall be comprised of the components specified as a minimum and also include components not indicated but required for a complete and operable system as described herein.

B. The system and all its components shall be UL listed and in accordance with NFPA 72, local and state codes.

C. The system shall have 25 % spare capacity. This shall include all individual notification circuits, initiation circuits, initiating modules, alarm modules, power supplies, batteries, central processing unit memory and printed circuit card space. System initiation device and control device capacity shall be a minimum of the indicated percentage over the shown quantity or 250 whichever is greater.

D. Each initiating device shall have an individual address for system communication. The system addresses shall not exceed seven digits. Each address, initiation circuit, notification circuit and control point shall have an individual identification description.

2.3 FIRE ALARM CONTROL PANEL (FACP)

A. The system shall be entirely solid state, microprocessor based, use digital transmission and shall be field programmable. All system programming including field modifications shall be stored in non-volatile memory. Field modifications shall be automatically stored without special actions. The panel shall be designed and manufactured expressly for the intent to detect the presence of fire and to provide indication of such detection. Panel shall contain as a minimum power supply(s), control module, main control printed circuit board, initiation modules, notification modules, terminals and back up battery(s). Control module shall have 80 character backlit LCD display and twelve control buttons (four being field assignable), minimum. Display shall indicate the battery voltage at all times.

B. The system shall be modular in design to allow for future expansion with a minimum of hardware additions.

C. The FACP shall be located where shown on the drawings. Enclosures shall accept all system items for an aesthetically suitable operator's console. Enclosures shall be of modular size to allow surface mounting of multiple boxes adjacent to each other, shall have hinged solid metal doors and contain a lock with a key common to all system devices. Enclosure shall have a red finish.

D. Conditions of the system shall be indicated at the operator interface by LED's. These conditions shall be alarm, supervisory, trouble and alarm silenced. An LCD 2 line, 40 character per line display shall also be included. It shall display "SYSTEM IS NORMAL" with the date and time under normal circumstances. The LCD display shall also indicate type of alarm, point status, number of alarms and location. Through the use of function keys, historical data can also be displayed.

E. The FACP shall include a password (three levels of protection with individual passwords, minimum) protected key pad for access to programming, special functions and all system features.

F. Any event initiated by the FACP due to an alarm input shall be retained in nonvolatile EPROM memory. The FACP shall also have sufficient memory for 1200 individual alarm/trouble events.

G. The FACP shall have the following user connection types:

1. Ethernet connection for a computer, personal data device or printer. Connection shall allow for programming changes, history download, setting review/changes, etc.

2. RS 232 port for connection of a serial printer.

H. Provide modules for network interfacing.

I. The FACP shall be equipped with a minimum of 4 hours of battery standby. The FACP shall be equipped with battery charging circuits sufficient to recharge fully depleted batteries to within 70% of the maximum capacity within 12 hours. When the system is operating on the battery supply, a trouble condition shall be generated. When utility power is restored, the system shall revert back to 120 VAC supply without any operator intervention.

J. Design Equipment: FCI E3

2.4 REMOTE TRANSPONDER UNIT (RTU)

A. The RTU shall function as a subpanel to the FACP, and shall have all the initiation, notification, control, battery, display functions, etc. as the FACP. In the event of failure of the FACP the RTU shall continue to function as a standalone system. All remote notification shall be through the FACP. Provide power circuits to the RTU similar to the FACP. The spare capacity indicated for the FACP shall also be provided in the RTU's. All trouble and alarm conditions at the RTU shall be transmitted to the FACP for suitable operation.

B. RTU's shall contain their own processors and memory and function independently of the FACP but utilize the same base programming. Programming functions in the RTU shall be accessible through the FACP and RTU.

C. The RTU shall be capable of communication with addressable devices that are uniquely identified by an address. Wiring shall be shielded twisted pair cable. The system must allow up to 2,500 feet wire length to the furthest addressable device. T-tapping of the communications channel or multiple loop channels shall be supported.

D. Enclosures shall be of modular size to allow **surface** mounting of multiple boxes adjacent to each other, shall have hinged solid metal doors and contain a lock with a key common to all system devices.

E. The FACP shall communicate with RTU's through dual supervised data lines. Data lines shall be standard #18 AWG twisted shielded pair minimum or as recommended by the manufacturer. In normal operation, each line shall be used alternately on intervals to maintain line integrity. Should either data line fail, system shall automatically revert to alternate data line and data line trouble shall be reported to operator. The FACP shall automatically "re-boot" after data line is restored. Minimum allowable distance between the FACP and RTU shall be 2500'.

F. Design Make: FCI E3 FACP.

2.5 VENTILATION FAN SHUTDOWN CONTROL

A. Provide supervised normally closed relays and contactors for connection into the fan motor control circuits ahead of all automatic devices.

B. Sequence fan shutdown for every air distribution system. Provide duct detectors in return of systems over 2,000 cfm and in both supply and return at each floor of systems over 15,000 cfm.

C. Provide drill bypass feature, locate switch on Fire Alarm Control Panel and label "DRILL-FAN SHUTDOWN BYPASS". Buzzer shall sound continuously while in bypass mode.

D. Provide fan reset feature, locate switch on Fire Alarm Control Panel and label "FAN RESET".

2.6 INITIATION DEVICES

A. General:

1. Provide analog addressable smoke and thermal sensors as shown. All detectors, control modules, monitor modules and all other initiation devices shall communicate with twisted pair cable and have an individual address. Peripheral devices shall be of the some manufacturer as the FACP.

2. Spot type detectors shall utilize the same interchangeable bases.

3. If a device is removed or taken out of service a trouble signal shall be initiated.

B. Photo-Obscuration Type Smoke Detector:

1. The photo-obscuration detector shall operate on the photo electronic principle and provide an analog signal to the system indicating the amount of smoke. Detector shall be an analog addressable type.

2. The detector shall incorporate a built in type identification so the system can identify the type of detector. The sensor shall be continually monitored to measure any change in their sensitivity because of the environment (dirt, smoke, temperature, humidity, etc.). Unit shall not be affected by exterior light or EMF.

3. The detector shall be designed and arranged to prevent interference from exterior electromagnetic fields and light.

4. The detector shall provide advance indication of the analog value of the products of combustion to the FACP indicating that maintenance is required in order to insure normal operation. The detector sensitivity shall be adjustable per device (within UL limits) and be set at the FACP for continuous or variable based on time of day. There shall be a minimum of six selectable sensitivity levels. The individual detector sensitivity setting shall be adjusted to meet the building/space characteristics and operation.

5. Detectors shall be designed for twistlock mounting to a separate base assembly. Provide manufacturer's recommended back box suitable for surface mounting where required.

6. The detector base shall have terminals for making all connections; no soldering shall be required. It shall be possible to secure the detector to the base with a concealed socket headscrew to prevent unauthorized tampering.

7. Smoke detectors shall be UL 268 listed and FM approved.

8. All smoke detectors shall be field checked and set to meet the prevailing conditions of the premise and any Owner requests. All such work shall be performed by an authorized representative of the manufacturer trained in such procedures.

9. Photo-obscuration type smoke detection shall be used for smoke detection unless indicated otherwise indicated.

C. Heat Detector:

1. The heat detector shall be a thermal sensor and shall constantly monitor the space temperature and constantly report this to the system. The unit shall be analog addressable.

2. The sensor shall use dual solid state thermistors and shall monitor the ambient temperature from 32 degrees F, to 155 degrees F and provide a fast response to rapid increase in temperature. The sensor shall send data to the FACP representing the analog value of the ambient temperature. The FACP shall be suitable to monitor for set temperature (selectable by detector for 135 or 155 degrees F) and rate of rise (selectable by detector for 15 or 20 degrees F per minute).

Individual detector thermal settings shall be adjusted for the building/space characteristics and operation but shall initially be set to 135 degrees F set temperature and 15 degrees F per minute rate of rise. Shall only be provided to areas prone to physical damage.

3. Detectors shall be designed for twistlock mounting to a separate base assembly. Provide back box suitable for surface mounting where required.

4. The detector base shall have terminals for making all connections; no soldering shall be required. It shall be possible to secure the detector in the base with a concealed socket headscrew to prevent unauthorized tampering.

5. Smoke detectors shall be UL 268 listed and FM approved.

6. All thermal sensors shall be field checked and set to meet the prevailing conditions of the premise. All such work shall be performed by an authorized representative of the manufacturer trained in such procedures.

D. Addressable Initiation Module:

1. The addressable initiation module shall be used to connect supervised conventional initiating device or zone of supervised conventional initiating devices (water flow switches, tamper switches, manual pull stations, (4) wire smoke detectors, conventional (4) wire duct detectors, fire pump alarms, dry chemical fire extinguisher control panels, etc.) to one of the system's addressable circuits.

2. The module shall provide address setting means using rotary decimal switches and also store an internal identifying code which the control panel shall use to identify the type of device.

3. The module shall contain an integral LED that flashes each time the unit is polled.

E. Manual Pull Stations:

1. Non-coded pull-down type, double action (push then pull down) manual addressable units with front keyed test/reset. Units shall be semi-flush where installed in construction with hollow or block walls. Where construction does not allow semi-flush mounting then unit shall be surface mounted utilizing the manufacturers back box. Each unit shall have a distinct address. Units shall be key reset.

2. Units installed outdoors or in potentially wet locations shall be rated for such conditions.

3. Bright red finish with white lettering "FIRE ALARM".

4. Provide tamperproof clear lexan protective shield with horn and batteries to produce 85 Db minimum sound pressure level at 10 ft. when shield is raised. Shield shall have activation/deactivation switch with lockout screw, and 400 lb. breaking strength retaining cable.

5. Unless directly connected to a central station alarm service, municipal alarm system or local manned fire alarm dispatch station, a clearly legible sign shall be posted above each manual station stating: "LOCAL ALARM ONLY - NOT CONNECTED TO FIRE DEPARTMENT - CALL FIRE DEPARTMENT BY TELEPHONE".

F. Duct-Type Smoke Detector:

1. Detector shall be a photoelectric type that shall be activated by the presence of combustion products.

2. The detector head shall be a plug-in unit. The unit shall contain no moving parts. One chamber shall be for fire detection and the second chamber shall function as a reference, to stabilize the detector for changes in environmental temperature, humidity and pressure. It shall be possible to electrically check detectors sensitivity, using a sensitivity test set, or equivalent, and readjust the detectors sensitivity as required.

3. The detector base shall have terminals for making all connections; no soldering shall be required. It shall be possible to secure the detector in the base with a concealed socket-head screw to prevent unauthorized tampering.

4. Smoke detectors shall be listed by Underwriter's Laboratories, Inc. and approved by Factory Mutual Insurance Company.

5. Provide complete with sampling tubes. Size sampling tubes for 80% of the width of the duct. Locate in ductwork for the indicated system and in accordance with the manufacturer's recommendations.

6. Provide auxiliary contacts and separate 24 VDC power to relay required for smoke damper operation.

7. Provide a remote indicating light/key test switch for each duct detector and mount in nearest corridor ceiling and labeled as to the damper is controlling.

8. Provide addressable base.

9. Duct detector shall report as a supervisory alarm at FACP.

10. Acceptable Manufacturer

    a. Game Well / FCI M/N DNR with 151 remote test station.

G. Projected Beam Photo Electric Smoke Detectors:

1. Microprocessor based beam type smoke detector consisting of two units with projected light beam with measurement of smoke obscuration. Units shall have individual system addresses and a sensing range suitable for the intended location with minimum capability up to 60 ft. x 330 ft. of detection area. Where an analog signal is not available provide an addressable initiation module for system interface.

2. System shall have an adjustable time delay (up to 30 seconds) for momentary beam blockage. Alarm sensitivity shall be adjustable.

3. System lensing shall be selected based on the intended location.

4. Shall initiate trouble alarm when dust obscures beam by 50%. Unit shall compensate for a gradual buildup of dust.

5. Installation with convenient beam alignment adjustments.

6. Provide with manufacturer surface mounting backbox for surface mounted locations.

7. Housing color to match the surrounding colors.

8. Operating voltage 18-32 VDC. Provide a 24 VDC power circuit from the FACP. Connect unit to the system addressable circuit with separate power connection.

9. Provide with remote indicator and testing station for each unit. Station shall indicate system condition (alarm, normal, trouble), have the ability to remotely test the system and have time delay/sensitivity adjustments. Mount station in local utility space and label for the specific unit.

10. Acceptable Manufacturer:

    a. Cornell University Standard UL listed for use with specified fire alarm control panel.

2.7 NOTIFICATION APPLIANCES

A. Horns:

1. 24 volts DC.

2. Basic grille type with powder coated red finish paint.

3. Horn shall be rated 94 dBA (anechoic chamer) at 10 feet. Output shall be selectable steady tone or coded. Provide dampening devices to reduce unit output by 5dBA for a minimum of 40% of the system horn units and install as needed to meet the Owners needs.

4. Units shall be semi-flush where installed in construction with hollow or block walls. Where construction does not allow semi-flush mounting then unit shall be surface mounted utilizing the manufacturers back box.

5. Units installed outdoors or in potentially wet locations shall be rated for such conditions.

6. Provide directional projector where noted on the Drawings.

7. Provide backbox and grille for fully recessed installations; 4 in. deep box maximum.

B. Strobe Unit:

1. 24 volts DC with built-in Xenon Flasher; two watts maximum. Pulse duration shall be 0.2 seconds with maximum duty cycle of 40%. Illumination intensity shall be field selectable for 15, 30, 75 or 110 candela. Output setting shall be 15 candela in corridors, 75 candela in general areas, 110 candela in sleeping areas or as indicated. Flash rate minimum 1 Hz, maximum 2 Hz. Units within building shall flash in synchronization.

2. Protruding pyramid shaped lexan lens with reflector and the word "FIRE" imprinted on the lens.

3. Rated life shall be a minimum of 500 hours of continuous operation.

4. Units installed outdoors or in potentially wet locations shall be rated for such conditions.

5. Units shall be semi-flush where installed in construction with hollow or block walls. Where construction does not allow semi-flush mounting then unit shall be surface mounted utilizing the manufacturers back box. Wall or ceiling mounted as noted on the Drawings.

6. Provide surface backbox for surface installation; 4 in. deep maximum.

C. Combination Horn-Strobe Units:

1. Unit shall be a combination of the horn and strobe units specified above in a single manufactured unit.

D. Addressable Notification Appliances:

1. Notification appliances specified herein shall be addressable and individually programmed for use as dictated by the Owner. Notification shall be programmed by floor, office space, common space, specialty use space and others as directed. Appliances shall only annunciate upon the directed conditions and order.

2.8 ADDRESSABLE CONTROL MODULE

A. The addressable control module shall have an individual system address, be supervised and control an output dry contact from indication from the FACP. This can be used to control or have an input to elevator controls, notification appliances, door holder circuits, fans systems, etc. as indicated. Modules shall be connected to the addressable loop(s).

B. The unit shall control an output relay (dry contact form C). The module shall mount in a 4 in. square, 2-1/8 in. deep electrical box.

C. The module shall contain an integral LED that shall flash each time the module is polled.

D. The module shall provide address setting means using rotary decimal switches and also store an internal identifying code which the control panel shall use to identify the type of device. Each unit shall have a separate address and be connected to the system addressable signaling circuit.

2.9 REMOTE ANNUNCIATOR

A. Wall mount within a flush box. Maximum depth of 4 in., stainless steel trim. Nominal dimensions of 4" x 12".

B. Annunciation shall be by two line by 40 character LCD display to provide system information and alarm/trouble description.

C. Unit power and control shall be from the FACP. Unit circuiting shall be supervised.

D. Provide trouble signal with audible buzzer, silencing switch and system reset. All pushbuttons shall be inoperable without keyswitch activated. Pushbuttons for alarm acknowledge, silence and alarm reset shall be standard on the front with a description. Shall include a minimum of four auxiliary switches/pushbuttons to be programmed as coordinated with the owner (possible options are door holder release override, manual alarm initiation, elevator capture bypass, etc.).

E. Tamper-resistant front panel screws.

F. Provide a framed directory showing the building outline of each floor and referencing device descriptions. All lettering shall be minimum 1/2 in. high. Mount next to remote annunciator.

2.10 BATTERY AND CHARGER

A. Standby power shall be provided through 24 volt DC battery and automatic charger.

B. Provide sealed lead-calcium batteries, ampere-hour capacity which will allow system to operate 24 hours under supervisory condition and at the end of this period to operate all alarm signals for ten consecutive minutes.

C. Provide cell reversal protection.

D. Life expectancy shall be ten years minimum.

E. Charger shall be self-regulating, solid state, type, automatic with capability to fully charge the discharged battery within five hours.

F. Locate charger within the FACP enclosure. Locate batteries in a separate vented enclosure directly adjacent to the FACP.

2.11 PULL STATION ALARM COVER

A. Provide a protective alarm cover over manual pull stations where prone to physical damage. Unit shall allow easy access to the manual pull station and also provide an audible alarm when operated.

B. Unit shall provide a 95dB alarm at 1 foot and be powered from a 9VDC battery.

C. Unit shall be suitable for use in the intended location and pull station.

D. Acceptable manufacturer:

1. System manufacturer.

2. STI Stopper II

2.12 CENTRAL STATION

A. Required points are as follows, but not limited to, (water flow, manual pull, smoke detection, heat detection, special extinguishing systems, and supervisory signals). Provide all necessary programming.

B. Furnish and install a Digitize "Mux Pad" with one 3/4" conduit with pull line and communication cable to communications room and one 3/4" conduit with wiring per manufacturer requirements between FACP and Mux Pad.

PART 3 - EXECUTION

3.1 INSTALLATION, EQUIPMENT

A. All installations shall be accomplished in a professional manner by qualified personnel regularly engaged in and experienced in this type of Work. Fire alarm installation shall be directed by a person who possesses a state license for installation of fire alarm systems. All equipment and components shall be installed in accordance with the manufacturer's recommendations.

B. System junction boxes and surface mounted device boxes shall be painted red.

C. Provide all wiring to sprinkler flow switches, pressure switches, and alarm check valves, installed by others. Maintain supervisory circuitry to the switches. Use liquidtight conduit for the last 2 ft. - 0 in. of raceway at the switch.

D. Provide all wiring to post indicator valves, OS&Y valves and dry pipe sprinkler system maintenance air pressure switches, provided by others. Wire into the supervisory alarm portion of the fire alarm system.

E. Provide all wiring to the smoke dampers installed by others. Provide an addressable control module for each. Wire to the damper junction box with flexible conduit and wire; provide box or boxes as required. Install according to NEC. Smoke dampers shall close when its associated smoke duct detector is in alarm, upon direction from the FACP or if the associated fan unit is not operating, including manual shutoff of power.

F. Provide all power supplies and wiring to smoke relief hatches and fire barriers provided by others. Smoke relief hatch or fire barrier shall operate only when its associated smoke detector is in alarm.

G. Provide all wiring to duct smoke detectors. Duct smoke detectors shall be mounted on the ventilating ductwork by others. All mounting arrangements, holes cut into ductwork, sealing of openings along with ceiling and access doors for the duct type detectors shall be provided by others. Provide duct detectors along with sampling tubes with end caps. Sequence smoke damper operation thirty seconds after its associated fan has been shut down. Duct detector shall report as supervisory alarm at FACP.

H. Provide all wiring required for fan shutdown. Wire from the addressable control module for each fan to be shut down and provide wiring from the module to the fan control unit (starter, adjustable speed drive, etc). Dry contact shall be wired ahead of all control functions for starters. Provide intermediate relay for control circuits beyond the rating of the control module.

I. Provide all wiring for remote test station and status annunciation for a smoke damper.

J. Install all door holders in accordance with installation detail on the drawings and coordinate with the General Construction trade. Connect door holders to nearest 120 volt corridor receptacle circuit.

K. Provide all elevator capture control wiring. Installation shall be in accordance with manufacturer's recommendations.

L. Elevator machine room and shaft heat detectors shall be mounted within two feet of the sprinkler head where applicable.

M. Detection and initiating equipment shall be listed by NRTL and approved by FM.

N. All surface mounted devices shall be mounted on a special box furnished by fire alarm equipment manufacturer. Total assembly shall be secure, smooth contour and have no protrusions.

O. Where detectors are installed on wood or masonry surfaces, attach brackets directly to the surface with tamperproof fasteners. Where detectors are installed on suspended ceilings, provide additional supports in the ceiling, such as channel support system, angle iron or additional runner bars. Fasten the additional supports rigidly to the ceiling runner bar system. Attach bracket to the supports with tamperproof fasteners. Install metal spacers between the bracket and supports so that the ceiling tiles will not be a part of the support system.

P. Install wall mounted audio/visual signal devices at 80 in. AFF to bottom. Where ceiling types are called for, verify ceiling type and mounting height in the field. Provide pendant-mounted devices as required for specified mounting height.

Q. An auxiliary fire alarm relay used to control an emergency control device that provides control functions described in this specification shall be located within 3 ft. of the emergency control device and all wiring shall be supervised.

R. All smoke detectors shall be field checked and set to meet the prevailing conditions of the premise. All such Work shall be performed by an authorized representative of the manufacturer trained in such procedures.

S. Provide all wiring at the EP switch. Wire to the EP switch with flexible conduit and wire; provide box or boxes if required. Install according to NEC. Smoke dampers shall operate only when its associated duct smoke duct detector is in alarm.

T. Provide all power supplies and wiring to smoke relief hatched and fire barriers. Smoke relief hatch or fire barrier shall operate only when its associated smoke detector is in alarm.

U. All wiring shall conform to N.E.C. Articles 725 and 760, and to NFPA-72, "National Fire Alarm Code".

V. Label all fire alarm devices and system components (major equipment, conduit, junction boxes and cabling) according to the Cornell Standard 16710 and 283100.

3.2 SYSTEM CIRCUITING

A. Contractor shall attempt to reuse as much exiting wiring as possible throughout the facility. Only replace or provide new when necessary.

B. All wiring shall conform to the NEC, and to NFPA-72, National Fire Alarm Code.

C. Install all wiring in accordance with manufacturer's recommendations taking into account loading, intended location, circuit length, spare capacity and voltage drop.

D. All wiring shall be copper and installed in a dedicated/segregated red EMT conduit system.

E. Power circuits:

1. Provide the required quantity of 20 ampere, 120 volt circuits to the system with a minimum of one for the FACP.

F. Provide minimum #18 AWG twisted shielded pair for addressable signal line circuits. Notification appliance circuits shall be#14AWG minimum.

G. Addressable signal line circuits shall be NFPA 72 2010 Class A (redundant, single open operation).

H. Notification appliance circuits shall be NFPA 72 - 2010 Class A (redundant, single open operation).

I. Provide a 24VDC power circuit, #16 twisted pair minimum, with each initiation addressable circuit for the entire length.

J. Notification circuits shall be segregated as indicated on the drawings and by individual floors as a minimum. Circuits shall also be dedicated to audible or visual appliances but not both.

3.3 PROGRAMMING

A. Include in bid the cost to cover all system programming, including items particular to this project (such as custom zone descriptions, time delay settings, sensitivity settings, etc.) such that entire system is 100% complete and operating to the Owner's satisfaction. Coordinate all system programming with the Owner. Also, provide programming of the system a minimum of once during the warranty period to provide changes requested by the Owner.

3.4 SPARE EQUIPMENT

A. Provide the following spare equipment to the Owner. Deliver the equipment to the Owner designated location on the project site in original packaging.

B. Equipment to include:

1. Smoke detectors: 5% of each type used with a minimum of five.

2. Heat detectors: 5% of each type used with a minimum of five.

3. Addressable control modules: 2% of each type used with a minimum of two.

3.5 TESTING AND INSTRUCTION

A. The complete fire alarm system shall be fully tested after the installation is complete. Testing shall include all devices, FACP, annunciator panel, other panels, features and functions. Testing shall be witnessed by the owners representative and be in accordance with the NFPA and herein. Provide a testing report to the authority having jurisdiction and the Engineer as a submittal.

B. Provide a minimum of 2 hours of instruction to the operating personnel designated by the Owner's Representative with regard to use and operation of the system. Provide up to three programming modifications.

C. Provide three sets of keys to all panels, manual stations, etc., to the Owner's Representative.

D. Provide a copy of the system programming to the Owner on a CD/DVD disk or flash drive.

E. Provide to the Owner system Operation Manuals as specified, that shall include as a minimum.

1. Bill of Material.

2. Catalog descriptive literature for all equipment. This shall include a description of the unit, ratings, functions, capability, materials and compatibility with other components.

3. Riser Wiring Diagram showing all equipment, devices, device addresses, connections, control connections, remote notification connection(s), wire quantities and sizes.

4. Floor plan indicating equipment and device locations, addresses, power circuit information with power panel location, notification circuiting, initiation circuiting and control circuiting. Contact the Engineer for a copy of the project floor plans.

5. Typical Terminal Wiring Diagram for each type of device.

6. Terminal wiring Diagram for all Fire Alarm equipment.

7. Calculations including:

   a. Battery sizing calculations indicating total number of power devices, load associated with each type device and recommended battery capacity (AH).

   b. Voltage drop calculations with actual equipment loads used to derive battery back-up ampere-hour rating and individual circuit voltage drop (indicate the wire size to be used and the associated voltage drop with the allowed voltage drop) for each circuit.

8. Instruction report starting when instruction was given and who was in attendance, signed by Owner's Representative.

9. A written test report from an authorized representative of the equipment manufacturer that each device and overall system operation has been 100% tested and approved.

10. Certificate of Completion as described in NFPA-72.

11. A two year warranty in accordance with the Basic Requirements of these Specifications shall be provided for this system.

12. All devices shall be pre-tested by the contractor and distributor prior to scheduling final acceptance test with AHJ and EH&S.

13. Final test to be done with AHJ and EH&S present.

3.6 FIRE / SMOKE DAMPER OPERATION

A. Installed Smoke Detection Devices and Smoke Dampers

1. Smoke dampers are installed at each duct/smoke barrier penetration.

2. Every smoke damper has a local duct smoke detector.

3. Every smoke damper has a local remote test station and status annunciation.

4. Every duct smoke detector is addressable and is connected to the building fire alarm system.

5. The building project area is provided with addressable area smoke detectors.

B. Fire Alarm Activation of Smoke Dampers

1. Duct Smoke Detectors:

a. Upon activation of any duct smoke detector, an addressable signal is sent to the building fire alarm system and the smoke damper associated with duct smoke detector is closed.

b. Upon receipt of the addressable duct smoke detector signal, the building fire alarm system shuts down both the supply and return fans or the exhaust fan, associated with the duct system that experienced the detector activation.

c. Upon receipt of the associated fan system drives being shut down, the building fire alarm system shall close all smoke dampers associated with that duct system on a 30 second delay.

C. Non-Fire Alarm System Activation of Smoke Dampers (These activations do not cause for a building fire condition to be annunciated)

1. Safety Device Activation

a. Upon activation of either the low-limit switch (freeze-stat) or the supply duct high static pressure switch, both the supply and return fans are de-energized via hardwiring of the low limit switch in the fan starter circuits.

b. The building fire alarm system point addressable module that is installed at the variable frequency drive of the supply and return fans then sends an addressable signal to the building fire alarm system indicating that the air handling system has been shut down.

c. Upon receipt of the associated fan system drives being shut down, the building fire alarm system shall close all smoke dampers associated with that duct system on a 30 second delay.

2. BMS (Building Management System) Component Fault

a. Upon activation of any of the following BMS component faults, the supply and return fans, or exhaust fan are de-energized via BMS.

1) Supply fan VFD fault

2) Return fan VFD fault

3) Exhaust fan VFD fault

4) Exhaust fan current sensor fault

5) Outside air damper end switch fault

6) Return air damper end switch fault

7) Exhaust air damper end switch fault

b. The building fire alarm system point addressable module that is installed at the variable frequency drive, or motor starter current sensor, of both the supply and return fans or exhaust fan, then sends an addressable signal to the building fire alarm system indicating that the air handling system has been shut down.

c. Upon receipt of the associated fan system drive/starter being shut down, the building fire alarm system shall close all smoke dampers associated with that duct system on a 30 second delay.

3. EMCS Operator Activation:

a. When the EMCS system operator overrides the operational status of the air handling system and shuts down the supply, return, or exhaust fans.

b. The shutdown of the supply, return or exhaust fans shall be interlocked through DDC programming. If the supply fan is shutdown, the return fan shall also be shut down automatically. If the return fan is shutdown, the supply fan shall be shut down automatically.

c. The building fire alarm system point addressable module that is installed at the variable frequency drive, or motor starter current sensor, of both the supply and return fans or exhaust fan, then sends an addressable signal to the building fire alarm system indicating that the air handling system has been shut down.

d. Upon receipt of the associated supply, return or exhaust fan system drive/starter being shut down, the building fire alarm system shall close all smoke dampers associated with that duct system on a 30 second delay.

4. Maintenance Operator Activation:

a. When a building maintenance staff member manually shuts off the supply, return or exhaust fan at the starter disconnect switch, the supply, return or exhaust fans are shutdown.

b. The shutdown of the supply, return or exhaust fans shall be interlocked through DDC programming. If the supply fan is shutdown, the return fan shall also be shut down automatically. If the return fan is shutdown, the supply fan shall be shut down automatically.

c. The building fire alarm system point addressable module that is installed at the variable frequency drive, or motor starter current sensor, of both the supply and return fans or exhaust fan, then sends an addressable signal to the building fire alarm system indicating that the air handling system has been shut down.

d. Upon receipt of the associated supply, return or exhaust fan system drive/starter being shut down, the building fire alarm system shall close all smoke dampers associated with that duct system on a 30 second delay.

D. Smoke Damper Testing - M/E Engineering offers the following suggestions for a smoke damper testing protocol. The actual final protocol needs to be authored and approved by all Cornell parties and agencies of interest.

1. Duct Smoke Detector (Fire Alarm Condition):

a. Under controlled conditions and with proper notification to the Building Manager and Cornell Fire and Safety, apply smoke to any duct smoke detector in the ductwork of any air handling systems which serve the project area.

b. Upon receipt of the addressable duct smoke detector signal, the building fire alarm system shuts down both the supply and return, or exhaust fans associated with the duct system that experienced the detector activation.

c. The building fire alarm system point addressable module that is installed at the variable frequency drive, or motor starter current sensor, of both the supply and return fans or exhaust fan, then sends an addressable signal to the building fire alarm system indicating that the air handling system has been shut down.

d. Upon receipt of the associated supply, return or exhaust fan system drive/starter being shut down, the building fire alarm system shall close all smoke dampers associated with that duct system on a 30 second delay.

e. Confirm damper closure at the local smoke damper access door.

2. Safety Device Activation (Non-Fire Alarm Condition)

   a. Under controlled conditions and with proper notification to the Building Manager, manually trip the low limit switch (freeze-stat) associated with any air handling system in the project area.

   b. The building fire alarm system point addressable module that is installed at the variable frequency drive, or motor starter current sensor, of both the supply and return fans or exhaust fan, then sends an addressable signal to the building fire alarm system indicating that the air handling system has been shut down.

   c. Upon receipt of the associated supply, return or exhaust fan system drive/starter being shut down, the building fire alarm system shall close all smoke dampers associated with that duct system on a 30 second delay.

   d. Confirm damper closure at the local smoke damper access door.

3. BMS Component Interlock or Fault:

   a. Under controlled conditions and with proper notification to the Building Manager, manually cause for a fault condition to occur in any of the following BMS components:

      1) Supply fan VFD fault

      2) Return fan VFD fault

      3) Exhaust fan VFD fault

      4) Exhaust fan current sensor fault

      5) Outside air damper end switch fault

      6) Return air damper end switch fault

      7) Exhaust air damper end switch fault

   b. The building fire alarm system point addressable module that is installed at the variable frequency drive, or motor starter current sensor, of both the supply and return fans or exhaust fan, then sends an addressable signal to the building fire alarm system indicating that the air handling system has been shut down.

c. Upon receipt of the associated supply, return or exhaust fan system drive/starter being shut down, the building fire alarm system shall close all smoke dampers associated with that duct system on a 30 second delay.

d. Confirm damper closure at the local smoke damper access door

4. EMCS Operator Activation (Non-Fire Alarm Condition):

a. Under controlled conditions and with proper notification to the Building Manager, manually override the operational status of any air handling system via laptop, PC or remote access to EMCS Webcontrol and shutdown the associated air handing system.

b. The shutdown of the supply, return or exhaust fans shall be interlocked through DDC programming. If the supply fan is shutdown, the return fan shall also be shut down automatically. If return fan is shutdown, the supply fan shall be shut down automatically.

c. The building fire alarm system point addressable module that is installed at the variable frequency drive, or motor starter current sensor, of both the supply and return fans or exhaust fan, then sends an addressable signal to the building fire alarm system indicating that the air handling system has been shut down.

d. Upon receipt of the associated supply, return or exhaust fan system drive/starter being shut down, the building fire alarm system shall close all smoke dampers associated with that duct system on a 30 second delay.

e. Confirm damper closure at the local smoke damper access door.

5. Maintenance Operator Activation (Non-Fire Alarm Condition):

a. Under controlled conditions and with proper notification to the Building Manager, manually shut off any air handling system within the project area.

b. The shutdown of the supply, return or exhaust fans shall be interlocked through DDC programming. If the supply fan is shutdown, the return fan shall also be shut down automatically. If the return fan is shutdown, the supply fan shall be shut down automatically.

c. The building fire alarm system point addressable module that is installed at the variable frequency drive, or motor starter current sensor, of both the supply and return fans or exhaust fan, then sends an addressable signal to the building fire alarm system indicating that the air handling system has been shut down.

d. Upon receipt of the associated supply, return or exhaust fan system drive/starter being shut down, the building fire alarm system shall close all smoke dampers associated with that duct system on a 30 second delay.

e. Confirm damper closure at the local smoke damper access door.

END OF SECTION 28 31 02

APPENDIX A
FIRE ALARM SYSTEM OPERATION/SEQUENCE MATRIX

System Outputs

System Inputs	Actuate Common Alarm Signal Indictor	Actuate Audible Alarm Signal	Actuate Common Supervisory Signal Indicator	Activate Audible Supervisory Signal	Actuate Common Trouble Signal Indicator	Activate Audible Trouble Signal	Indicate Zone or Device Description	Activate Notification Appliances	Display Change of Status on All Annunciators/Printers	Transmit Alarm Signal to Central Station	Transmit Supervisory Signal to Central Station	Transmit Trouble Signal to Central Station	Release Magnetically Held Doors	Recall Elevator to Recall Floor	Actuate Warning to Elevator Controls	Actuate Warning to Elevator Cabs	Activate Elevators Shunt Trip	Close All Related Smoke Dampers	Unlock All Exits and Control Doors	Shutdown Respective Air Handling Units (SA and RA)	Activate Floor Pressurization (High Rise Only)	Activate Stairwell Pressurization (High Rise Only)	Active Smoke Exhaust (High Rise Only)	Open Associated Smoke Hatch	Local Notification
Fire Alarm System AC Power Failure					X	X						X													
Fire Alarm System Low Battery					X	X						X													
Open Circuit					X	X						X													
Ground Fault					X	X						X													
Circuit Short					X	X						X													
Manual Pull Station Actuation	X	X					X	X	X	X			X						X						
Area Smoke Detectors	X	X					X	X	X	X			X	X				X	X		X	X	X		
HVAC Air Duct Smoke Detector	X	X	X	X			X		X											X					
Area Heat Detectors	X	X					X	X	X	X			X	X				X	X		X	X	X		
Fire Suppression System Alarm	X	X					X	X	X	X			X	X				X	X						
Sprinkler Tamper Switch			X	X			X				X														
Sprinkler Water Flow in Building	X	X					X			X			X	X				X	X						
Sprinkler Water Flow in Elevator Equipment Room or Shaft	X	X					X	X	X	X					X	X	X	X							
Elevator Shaft Smoke Detector	X	X					X	X	X	X														X	
Elevator Equipment Room Area Smoke Detector	X	X					X	X	X	X			X	X		X		X	X						
Elevator Shaft and Equipment Room Heat Detectors	X	X	X	X			X	X	X	X			X	X		X	X	X	X						
Elevator Pit Sprinkler Flow	X	X					X			X				X	X	X	X								
Elevator Pit Heat Detector	X	X					X	X		X				X	X	X	X								
Elevator Lobby Smoke Detectors	X	X					X	X	X	X			X	X				X	X		X	X	X		
Elevator Lobby Recall Floor	X	X					X	X	X	X			X	X				X	X		X	X	X		
Fire Pump Power Failure/Phase Reversal			X	X			X		X	X	X	X													
Fire Pump Low Fuel			X	X			X		X	X	X		X	X				X	X						
Fire Pump Running	X	X					X		X	X			X	X				X	X						
Jockey Pump Running			X	X			X		X		X														
Fire Pump not in Automatic Mode	X	X					X			X															
Area of Refuge Two-Way Communication Status	X	X					X			X															
Smoke Detector Adjacent to Smoke Hatch	X	X					X	X	X	X			X	X					X						
AHU Off, Any Reason																		X							
CO Detection			X	X			X		X		X														X