Tompkins County
Public Library Exterior Upgrades Project

101 E Green Street
Ithaca, New York 14850

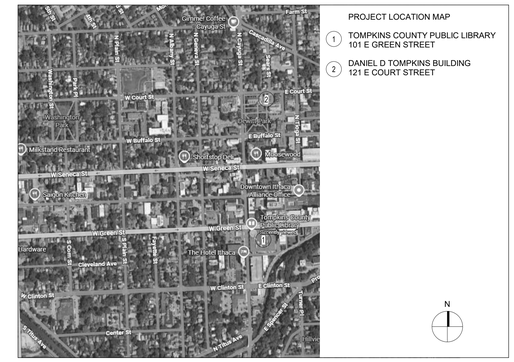

Project Location Map

Drawing List

GENERAL
G001 Title Sheet and Symbols and Abbreviations

Tompkins County Public Library

HAZARDOUS MATERIALS
AH100 Abatement Plan

CIVIL
AC100 Demo and SESC Plan
AC120 Site Layout and Planting Plan
AC130 Site Grading and Utility Plan
AC500 Site Details

ARCHITECTURAL
AA051 First Floor Key Plan
AA190 Roof Plan
AA191 Details and Notes
AA200 Exterior Elevations

Daniel D. Tompkins Building

CIVIL
BC120 Site Daniel D. Tompkin Building Plan

Site Symbols

- SPOT ELEVATION
- TOP OF CURB ELEVATION / BOTTOM OF CURB ELEVATION
- EXISTING SPOT ELEVATION
- CONTOUR
- EXISTING CONTOUR
- SOIL TEST BORING
- TEST PIT LOCATION
- TREE OR SHRUB
- TREE OR SHRUB TO REMAIN
- TREE OR SHRUB TO BE REMOVED
- ASPHALT PAVING OR TOP COURSE
- HEAVY-DUTY ASPHALT PAVING
- REMOVE AND REPLACE ASPHALT PAVING
- CONCRETE PAVING
- CONCRETE SECTION
- CURBING
- CURBING TO REMAIN
- CURBING TO BE REMOVED
- FENCING
- FENCING TO REMAIN
- FENCING TO BE REMOVED
- SILT FENCING
- TEMPORARY CONSTRUCTION FENCING
- HAY BALES
- TEMPORARY TREE PROTECTION
- UTILITY POLE
- UTILITY POLE TO REMAIN
- UTILITY POLE TO BE REMOVED
- NEW OR RELOCATED FIRE HYDRANT
- FIRE HYDRANT TO REMAIN
- DROP INLET
- CATCH BASIN
- STORM/SANITARY MANHOLE
- DROP INLET TO REMAIN
- MANHOLE/CATCH BASIN/DRYWELL TO REMAIN
- DRYWELL W/ GRATE
- DRYWELL W/ SOLID COVER TO GRADE
- DRYWELL W/ COVER BURIED
- STORM LINE WITH HEADWALL
- STORM LINE WITH ENDWALL
- STORM LINE WITH END SECTION
- STORM PIPE
- STORM PIPE TO REMAIN
- STORM PIPE TO BE REMOVED/ABANDONED
- UNDERDRAIN
- UNDERDRAIN TO REMAIN
- UNDERDRAIN TO BE REMOVED/ABANDONED
- SANITARY LINE
- SANITARY LINE TO REMAIN
- SANITARY LINE TO BE REMOVED/ABANDONED
- GAS LINE
- GAS LINE TO REMAIN
- GAS LINE TO BE REMOVED/ABANDONED
- WATER LINE
- WATER LINE TO REMAIN
- WATER LINE TO BE REMOVED/ABANDONED
- STORM/SANITARY CLEANOUT
- GATE VALVE
- SIGN POST
- UNIVERSAL HANDICAP SYMBOL
- REMOVAL
- RIP-RAP

Structural Symbols

- INDICATES AREA IS EXISTING
- INDICATES SLAB IS DEPRESSED OR RECESSED
- TOP OF FTG ELEVATION FROM DATUM
- CONTINUOUS FTG
- FOUNDATION WALL
- BM POCKET ELEVATION FROM DATUM
- STEPPED FOOTING
- INDICATES PIER TYPE
- TOP OF PIER ELEVATION FROM DATUM
- TOP OF FOOTING ELEVATION FROM DATUM
- INDICATES FOOTING TYPE REFER TO FOOTING SCHEDULE
- INDICATES A FRAMED ROOF OR FLOOR OPNG COORD SIZE AND LOCATION
- INDICATES FRAMED OPNG IS FOR: RD = ROOF DRAIN, ME = MECH EQUIP, SL = SKYLIGHT, SH = SMOKE HATCH, AH = ACCESS HATCH
- WALL TYPE
- ELEVATION FROM DRAWING DATUM
- BEAM SIZE
- NUMBER OF SHEAR STUDS OVER FULL LENGTH OF BEAM
- INDICATES TOP OF BEAM AT ADJ GIRDER ELEV
- END REACTION- KIPS
- DEFLECTION (INCHES) APPROX W/ WET CONC
- LINTEL DESIGNATION SEE SCHEDULE
- INDICATES LINTEL CONNECTION TO COLUMN
- INDICATES MEMBER IS EXISTING
- INDICATES BEAM SPLICE
- INDICATES MOMENT CONNECTION
- OVER COLUMN
- INDICATES SHEAR WALL CONNECTION TO BEAM
- INDICATES BM TO HAVE TOP OF WALL CLIPS
- JOIST DESIGNATION
- INDICATES BEAM FRAMES HORIZONTAL BRIDGING
- JOIST
- DIAGONAL BRIDGING
- MASONRY LOAD BEARING WALL
- SHEAR WALL SEE SCHEDULE
- CFMF BEARING WALL
- FIREWALL

Standard Symbols

- STANDARD REFERENCE BUBBLE
- DETAIL NUMBER
- DRAWING NUMBER
- Floor Plan 1/8"=1'-0" — DRAWING TITLE & SCALE
- BUILDING SECTION
- CLL — CONTRACT LIMIT LINE
- ADA 5' TURNING RADIUS
- 100'-0" 1st FF — ELEVATION CALL OUT
- WALL SECTION
- ELEVATION
- INTERIOR ELEVATION
- DETAIL
- NORTH ARROW
- CLASSROOM 101 — ROOM NAME AND NUMBER
- PROPERTY LINE
- CUT LINE
- COLUMN CENTER LINE
- CENTER LINE
- MATCH LINE
- DRAWING REVISION NUMBER
- EARTH
- GRAVEL
- SAND
- CONCRETE
- NEW ASPHALT PAVING OR TOP COURSE
- NEW HEAVY-DUTY ASPHALT PAVING
- REMOVE AND REPLACE ASPHALT PAVING
- BRICK
- CONCRETE MASONRY UNITS
- STONE
- FINISHED WOOD TRIM
- PLYWOOD
- INSULATION (LOOSE OR BATT)
- ROUGH WOOD
- STRUCTURAL GLAZED TILE
- RIGID INSULATION
- METAL, STEEL
- TERRAZZO
- ACOUSTICAL PANEL
- CERAMIC TILE
- RESILIENT FLOORING
- GLASS (LARGE SCALE)
- PLASTER, CEMENT, GROUT, GYPSUM WALL BOARD

A		BCX	BOTTOM CHORD EXTENSION	CHAN	CHANNEL	DC	DIRECT CURRENT	ENC	ENCLOSURE	FOS	FUEL OIL SUPLY	HP	HORSEPOWER, HIGH PRESSURE, HEAT PUMP	LBL	LABEL	MO	MASONRY OPENING	PLWD	PLYWOOD	REQD	REQUIRED	SK	SINK	TMV	THERMOSTATIC MIXING VALVE	W	WEST, WIDTH, WIDE, WASTE, WATT
A/S	AIR SEPARATOR	BD	BOARD	CHUV	CEILING HUNG UNIT VENTILATOR	DDC	DIRECT DIGITAL CONTROL	ECD	EDGE OF DECK	FOT	FLAT ON TOP			LBP	LEAD BASED PAINT	MOD	MODULE (OR), MODEL	PM	PLUGMOLD	REGL	RESILIENT	SLC	SOUND LINED, SKYLIGHT	TOD	TOP OF DUCT	W/	WITH
AAC	ASBESTOS ABATEMENT CONTRACTOR	BDD	BACKDRAFT DAMPER			DE	DELONIZED WATER	ECS	EDGE OF SLAB	FP	FIREPROOF (ING)	HPC	HIGH PERFORMANCE COATING	LC	LANDSCAPE CONTRACTOR (SITE)	MP	MULTICOLOR WALL COATING	PNL	PANEL	RET	RETAINING, RETURN	SLC	SILLCOCK	TOF	TOP OF FASCIA, TOP OF FOOTING	W/O	WITHOUT
AAD	AUTOMATIC AIR DAMPER	BF	BACK FLOW PREVENTER	CI	CAST IRON	DEG	DEGREES	EQ	EQUAL, EQUIVALENT	FPM	FEET PER MINUTE	HPL	HIGH PRESSURE LAMINATE	LCC	LEAD COATED COPPER	MR	MOP RECEPTOR	POC	POINT OF CURVATURE, POINT OF CONNECTION	REV	REVISION, REVISED, REVEAL	SLV	STORM LOUVER	TOL	TOLERANCE	WB	WET BULB
AB	ANCHOR BOLT, AIR BARRIER	BG	BOTTOM GRILLE	CIP	CAST IN PLACE	DEMO	DEMOLISH	EQUIP	EQUIPMENT CONTRACTOR	FR	FRAME, FLOOR REGISTER	HPR	HEAT PUMP LOOP WATER RETURN	LDR	LEADER	MT	MOUNT	POL	POLISHED	RF	RUBBER FLOORING	SMH	SANITARY MANHOLE	TOM	TOP OF MASONRY	WC	WATER CLOSET, WALL COVERING
AC	AIR CONDITIONING, ALTERNATING CURRENT	BITT	BITUMINOUS	CIRC	CIRCUMFERENCE	DEP	DEPRESS (ED) (ION)	ERV	ENERGY RECOVERY UNIT	FRA	FRESH AIR	HPS	HEAT PUMP LOOP WATER SUPPLY	LEV	LEVEL	MTD	MOUNTED	POS	POSITIVE	RFG	ROOFING	SOAB	SOAP DISPENSER	TOP	TOP OF PIPE, TOP OF PIER	WD	WOOD, WOOD FLOORING
ACCMP	ASPHALT COATED CORR METAL PIPE	BLDG	BUILDING	CJ	CONTROL JOINT	DET	DETAIL (ED)	ERV	ENERGY RECOVERY VENTILATION	FRC	FIRE RESISTANT COATING			LF	LINEAR FOOT	MTG	MOUNTING	POT	POINT OF TANGENCY	RFH	ROOF HATCH	SP	STATIC PRESSURE, STANDPIPE, SPRAE (ING) (ES)	TOS	TOP OF STEEL, TOP OF STAIR	WDW	WINDOW
ACM	ASBESTOS CONTAINING MATERIAL	BLK	BLOCK	CL	CENTER LINE	DF	DRINKING FOUNTAIN			FRP	FIBERGLASS REINFORCED PANEL	HR	HANDRAIL, HOUR	LFMC	LIQUID-TIGHT FLEXIBLE METAL CONDUIT	MTH	MARBLE THRESHOLD	PR	PAIR	RFM	RECESSED FLOOR MAT	SPEC	SPECIFICATION (S)	TPART	TOILET PARTITION	WDWC	WINDOW CONTRACTOR
		BLKG	BLOCKING	CLG	CEILING	DH	DOUBLE HUNG					HT	HEIGHT	LFNC	LIQUID-TIGHT FLEXIBLE NONMETALLIC CONDUIT	MTL	METAL	PRE	POWER ROOF EXHAUSTER	RG	RETURN GRILLE	SPKR	SPRINKLER	TR	TOP REGISTER	WF	WASH FOUNTAIN
		BM	BEAM	CLKG	CAULKING	DHU	DEHUMIDIFICATION UNIT	ES	EXPOSED SUNFACE, EXPOSED STRUCTURE	FRT	FIRE RETARDANT	HTG	HEATING			MTR	METER	PREP	PREPARE (ATION)	RGS	RIGID GALVANIZED STEEL	RH	RIGHT HAND	TRN	TRANSOM	WG	WALL GRILLE, WATER GAUGE
		BO	BY OTHERS	CLL	CONTRACT LIMIT LINE	DI	DROP INLET, DUCTILE IRON, DISTILLED WATER	ESF	ELASTIC SHEET FLASHING	FS	FLOOR SINK	HV	HIGH VOLTAGE	LG	LENGTH, LONG	MULL	MULLION	PRF	PREFORMED	RHC	REHEAT COIL	SPL	SPECIAL	TS	TOP OF STAIR	WH	WALL HUNG, WALL HYDRANT
ACT	ACOUSTICAL CEILING TILE	BOD	BOTTOM OF DUCT	CLRM	CLASSROOM	DIA	DIAMETER	ESM	ELASTIC SHEET MEMBRANE	FSD	FIRE AND SMOKE DAMPER	HVAC	HEATING/VENTILATING/AIR CONDITIONING	LGI	LARGE GROUP INSTRUCTION	MV/EJ	MASONRY VENEER EXPANSION JOINT	PROJ	PROJECT	RO	ROUGH-IN	SQ	SQUARE	TV	TELEVISION	WHA	WATER HAMMER ARRESTOR
ACU	AIR CONDITIONING UNIT	BOF	BOTTOM OF FOOTING	CMP	CONCRETE MASONRY UNIT	DIAG	DIAGONAL	EW	EACH WAY	FT	FEET, FLOOR TREATMENT			LH	LEFT HAND			PS	PAINT EXPOSED	RL	RAIN LEADER, REFRIGERANT LIQUID	SS	STAINLESS STEEL	TW	TEMPERED WATER, TOP OF WALL	WI	WROUGHT IRON
AD	AREA DRAIN	BOS	BOTTOM OF STEEL	CMT	CERAMIC MOSAIC TILE	DIM	DIMENSION	EWC	ELECTRIC WATER COOLER	FTG	FOOTING	HVU	HEATING AND VENTILATING UNIT	LN	LINEAR	N	NORTH					SST	STRUCTURAL STEEL TUBING			WM	WIREMOLD
ADA	AMERICAN DISABILITIES ACT	BOT	BOTTOM	CMU	CONCRETE MASONRY UNIT	DISP	DISPENSER	EWT	ENTERING WATER TEMPERATURE	FTR	FIN TUBE RADIATION			LKR	LOCKER	NAT	NATURAL	PSF	POUNDS PER SQUARE FOOT	RLG	RAIL(ING)	ST	STORM, STORAGE	TYP	TYPICAL	WP	WATER PROOFING, WORKING POINT
ADD	ADDENDUM	BPL	BEARING PLATE	CO	CLEAN OUT	DIST	DISTANCE			FV	FLUSH VALVE	HW	HOT WATER	LL	LIVE LOAD	NC	NORMALLY CLOSED	PSI	POUNDS PER SQUARE INCH	RM	ROOM	STA	STATION	U		WR	WATER REPELLENT, WIDE RIB, WALL REGISTER
ADDL	ADDITIONAL	BR	BOTTOM REGISTER	CODP	CLEAN OUT DECK PLATE	DIV	DIVISION	EXG	EXISTING	G	GAS, GLYCOL	HWH	HOT WATER HEATER	LP	LOW PRESSURE	NEC	NATIONAL ELECTRIC CODE	PT	POINT, PORCELAIN TILE	RMC	RIGID METAL CONDUIT	STC	SHOWER TEMPERATURE CONTROLLER, STAINED CONCRETE	UC	UNDERCUT	WS	WATER STOP
ADDN	ADDITION	BRG	BEARING	COL	COLUMN	DL	DEAD LOAD	EXH	EXHAUST	GA	GAUGE	HWP	HOT WATER PUMP	LPC	LOW PRESSURE CONDENSATE	NEGA	NEGATIVE	PTD	PAINTED	RNC	RIGID NONMETALLIC CONDUIT			UD	UNDERDRAIN	WSCT	WAINSCOT
ADH	ADHESIVE	BRK	BRICK	COMB	COMBINATION	DN	DOWN	EXP	EXPANSION	GAL	GALLON	HWR	HOT WATER RETURN			NEUT	NEUTRALIZATION	PTFR	PRESSURE TREATED FIRE RETARDANT	RNT	RUNNING TRAP			UE	UNDERGROUND ELECTRIC	WT	WEIGHT
ADJ	ADJACENT	BRSH	BRICKSHELF	COMP	COMPRESS (ED) (ION) (IBLE), COMPOSITE	DO	DITTO	EXT	EXTERIOR, EXTERNAL	GALV	GALVANIZED	HWS	HOT WATER SUPPLY	LPG	LIQUID PROPANE GAS	NG	NATURAL GAS	PTP	PRESSURE TREATED PRESERVATIVE	RO	ROUGH OPENING	STD	STANDARD	UG	UNDERGROUND	WWHP	WATER TO WATER HEAT PUMP
ADR	ACCESS DOOR	BRZ	BRONZE			DP	DAMPPROOF (ING)	F		GASK	GASKET (ED)	I		LPS	LOW PRESSURE STEAM	NIC	NOT IN CONTRACT			RP	REVOLUTIONS PER MINUTE	STG	SEATING	UH	UNIT HEATER	WWR	WELDED WIRE REINFORCEMENT
AESS	ARCH EXPOSED STRUCTURAL STEEL	BS	BOTH SIDES, BOTTOM OF STAIR	CONC	CONCRETE	DPR	DAMPER	FA	FAHRENHEIT	GC	GENERAL CONTRACT (OR)	ID	INSIDE DIAMETER	LPT	LOW POINT	NO	NUMBER, NORMALLY OPEN	PVC	POLYVINYL CHLORIDE	RR	REMOVE EXISTING AND REPLACE WITH NEW	STL	STEEL	UNF	UNFINISHED		
AFF	ABOVE FINISH FLOOR	BSMT	BASEMENT	COND	CONDENSATE	DR	DOOR, DEEP RIB	FAI	FIRE ALARM	GCMU	GLAZED CONCRETE MASONRY UNIT	IE	INVERT ELEVATION	LS	LINOLEUM SHEET	NOM	NOMINAL	PVMT	PAVEMENT			STN	STAIN (ED)	UNIF	UNIFORM		
AH	ACCESS HATCH	BSPL	BACKSPLASH	CONN	CONNECTION	DS	DOWNSPOUT, DRAINAGE STRUCTURE	FIRE	FIRE ALARM INTAKE			IN	INCHES	LT	LIGHT, LINOLEUM TILE	NRC	NOISE REDUCTION COEFFICIENT	PWE	POWER WALL EXHAUSTER	RS	RUBBER STAIR TREAD/RISER, REFRIGERANT SUCTION	STOR	STORAGE	UNO	UNLESS NOTED OTHERWISE		
AHU	AIR HANDLING UNIT	BT	BENT	CONT	CONTINUOUS			FCU	FAN COOLING UNIT	GCO	GRADE CLEANOUT GF GROUND FACE	INCL	INCLUDE (D) (ING)	LTL	LINTEL	NTS	NOT TO SCALE	Q				STRU	STRUCTURAL	UR	URINAL		
AIB	AIR INFILTRATION BARRIER	BTU	BRITISH THERMAL UNITS	CONTR	CONTRACT (OR)	DT	DRAIN TILE	FD	FLOOR DRAIN, FIRE DAMPER	GL	GLASS, GLAZING	INS	INSULATE (D) (ION)	LV	LABORATORY VENT, LOW VOLTAGE	O		QF	QUARTZ FLOORING	RTH	ROOF TOP HOOD	SURF	SURFACE	UT	UNDERGROUND TELEPHONE	X	
ALT	ALTERNATE	BTUH	BRITISH THERMAL UNITS PER HOUR	COORD	COORDINATE	DTA	DOVETAIL ANCHOR	FDC	FDC/FIRE DEPARTMENT CONNECTION	GND	GROUND	INT	INTERIOR			OA	OVERALL, OUTSIDE AIR	QT	QUARRY TILE	RTU	ROOF TOP UNIT	SUSP	SUSPSUSPENDED	UV	UNIT VENTILATOR	XHCI	EXTRA HEAVY CAST IRON
ALTB	ACOUSTICALLY LINED TRANSFER BOX			CORR	CORRUGATED, CORRIDOR	DTL	DETAIL			GPM	GALLONS PER MINUTE	INV	INVERT	LVR	LOUVER	OC	ON CENTER	R		RW	RAW WATER	SV	SHEET VINYL, STEAM VENT	V		Y	
ALTN	ALTERATION	BUR	BUILT-UP ROOFING	COVP	CLEAN OUT WALL PLATE	DTR	DUAL TEMPERATURE RETURN	FE	FIRE EXTINGUISHER	GR	GRADE (ING), GLYCOL RETURN	IP	IRON PIPE	LW	LABORATORY WASTE	OD	OUTSIDE DIAMETER	RA	RADIUS, RETURN, REFRIGERANT	S		SWCI	SERVICE WEIGHT CAST IRON	V	VENT, VOLT	YD	YARD DRAIN, YARD
ALUM	ALUMINUM	BW	BOTTOM OF WALL	CPVC	CHLORINATED POLY VINYL CHLORIDE	DTS	DUAL TEMPERATURE SUPPLY	FEC	FIRE EXTINGUISHER CABINET			IPS	IRON PIPE SIZE	LWT	LEAVING WATER TEMPERATURE	OH	OVERHEAD	RAT	RETURN AIR	S	SOUTH, SUPPLY, SURGE PROTECTED	SYM	SYMMETRICAL	VAR	VARIES, VARIABLE		
AMP	AMPERE	BWC	BACK WATER CHECK VALVE			DW	DUMBWAITER, DISHWASHER	FF	FINISH FLOOR, FACTORY FINISH	GS	GLYCOL SUPPLY	IW	INDIRECT WASTE			OPNG	OPENING	RAD	RADIATION	SA	SUPPLY AIR	SYN	SYNTHETIC	VARN	VARNISH		
ANOD	ANODIZED	C		CR	CEILING REGISTER	DWG	DRAWING	FFE	FINISH FLOOR ELEVATION	GVL	GRAVEL	J		M		OPP	OPPOSITE	RAF	RETURN AIR FAN, RESILIENT ATHLETIC FLOORING	SAS	SMOOTH ALL SIDES	SYS	SYSTEM	VAT	VINYL ASBESTOS TILE		
ANT	ACID NEUTRALIZATION TANK	C	CONDUIT, CONVECTOR, CONDENSOR, COMMON, CARPET	CRS	COURSE (S)	DWL	DOWEL	FFL	FINISH FLOOR LINE	GWB	GYPSUM WALL BOARD	JAN	JANITORS CLOSET	MAN	MANUAL	OPP HD	OPPOSITE HAND	J	JANITORS CLOSET	SC	SOLID CORE, SILL COCK, SEALED CONCRETE	T	T	VAV	VARIABLE AIR VOLUME		
AP	ACCESS PANEL, APPROX, APPROXIMATE(LY)			CSK	COUNTERSINK	DWR	DRAWER	FG	FLOOR GRILLE	GYP	GYPSUM	JB	JUNCTION BOX	MAS	MASONRY	P		P		SCHED	SCHEDULE	TB	TREAD, TOP, TOILET ROOM, TONS, TERRAZZO	VB	VACUUM BREAKER, VAPOR RETARDER BARRIER, VOLLEYBALL		
APC	ARCHITECTURAL PRECAST CONCRETE	CA	COMPRESSED AIR	CSMT	CASEMENT	E	EAST	FH	FIRE HYDRANT	H	HEIGHT	JC	JANITORS CLOSET	MAT	MATERIAL		PAINT SURFACE(S) INCLUDING SOFFITS	RC	ROOFING CONTRACT (OR)	SCT	STRUCTURAL CLAY TILE	TBD	TO BE DETERMINED	VCB	VENTED COVE BASE		
ARCH	ARCHITECT (URAL)	CAB	CABINET	CT	COMPUTER TERMINAL, CERAMIC BASE TILE	EA	EXHAUST AIR, EACH	FHC	FIRE HOSE CABINET	HB	HOSE BIB	JCT	JUNCTION	MAX	MAXIMUM	MAU	MAKE UP AIR UNIT	RCA	RECYCLED CONCRETE AGGREGATE	STD	STORM DRAIN, SPLITTER DAMPER, SMOKE DAMPER	TC	TEMPERATURE CONTROL, TEMPERED CLEAR, TELECOMMUNICATION CONTRACTOR, TOP OF CURB	VCT	VINYL COMPOSITE TILE		
ASB	ASBESTOS	CATV	CABLE TELEVISION	CTD	COATED	EAT	ENTERING AIR TEMPERATURE	FIN	FINISH (ED)	HBD	HARD BOARD	JT	JOINT	MB	MARKER BOARD	PAR	PARALLEL	RCP	REINFORCED CONCRETE PIPE, REFLECTED CEILING PLAN	SECT	SECTION			VD	VOLUME DAMPER		
ASPH	ASPHALT	CB	CATCH BASIN, CIRCUIT BREAKER, CHALKBOARD	CTOP	COUNTER TOP	EB	EXPANSION BOLT	FL	FLUSH	HC	HEATING CONTRACT (OR), HANDICAP	K		MBH	THOUSAND BTUH	PART	PARTITION			SF	SQUARE FEET			VERM	VERMICULITE		
ATV	ATMOSPHERIC VENT	CCTV	CLOSED CIRCUIT TELEVISION	CTR	CENTER	EC	ELECTRICAL CONTRACTOR	FLD	FLOOR DUCT			KV	KILOVOLT	MBR	MIRROR	PC	PLUMBING CONTRACT (OR), PIGMENTED CONCRETE	RCU	REMOTE CONDENSING UNIT	SGI	SMALL GROUP INSTRUCTION	TDV	TRIPLE DUTY VALVE	VERT	VERTICAL		
AUD	AUDITORIUM	CD	CEILING DIFFUSER, CONDENSATE DRAIN	CU	CUBIC	ECF	ENHANCED CONCRETE FLOORING	FLEX	FLEXIBLE	HCR	HOT/CHILLED RETURN	KVA	KILOVOLT AMPERE	MD	MOTORIZED DAMPER	PCC	PRECAST CONCRETE	RD	ROOF DRAIN	SGT	STRUCTURAL GLAZED TILE	TEL	TELEPHONE	VEST	VESTIBULE		
AUTO	AUTOMATIC	CEM	CEMENT	CUH	CABINET UNIT HEATER	EF	EACH FACE, EXHAUST FAN	FLG	FLASHING	HCS	HOT/CHILLED SUPPLY	KW	KILOWATT	ME	MECHANICAL EQUIPMENT	PE	PORCELAIN ENAMEL	RECEP	RECEPTACLE	SH	SHELF, SHELVING, SMOKE HATCH	TEMP	TEMPERATURE	VIF	VERIFY IN FIELD		
AVE	AVERAGE	CER	CERAMIC	CV	CONVECTOR, CURB VALVE	EIFS	EXTERIOR INSULATION SYSTEM	FLR	FLOOR (ING)	HD	HEAVY DUTY	KWH	KILOWATT PER HOUR	MECH	MECHANICAL (L'Y)	PENC	PRE-EXISTING NON-CONFORMING	T		SHR	SHOWER, SHEAR WALL	TG	TOP GRILLE, TONGUE AND GROOVE	VIN	VINYL		
B		CF	CUBIC FEET, CEILING FAN	CW	COLD WATER			FLUOR	FLUORESCENT	HDPE	HIGH DENSITY POLYETHYLENE	L		MED	MEDIUM	PERF	PERFORATE (ION) (ED)	REF	REFERENCE	SHT	SHEET			VIT	VITREOUS TILE		
B	BOILER, BRICK, BOTTOM	CFM	CUBIC FEET PER MINUTE	CWR	CHILLED WATER RETURN	EJ	EXPANSION JOINT	FM	FLOOR MOUNTED	HDR	HEADER	L	LENGTH, LONG	MEMB	MEMBRANE	PERI	PERIMETER	REFL	REFLECT (ED) (IVE) (OR)	SHTHG	SHEATHING	THK	THICKNESS	VNR	VENEER		
BB	BASKETBALL	CFMF	COLD FORMED METAL FRAMING	CWS	CHILLED WATER SUPPLY	ELEC	ELECTRIC (AL)	FMC	FLEXIBLE METAL CONDUIT	HDW	HARDWARE	LAB	LABORATORY	MF	MIXING FAUCET	PERP	PERPENDICULAR	REFR	REFRIGERATOR	SIM	SIMILAR	THR	THRESHOLD	VOL	VOLUME		
BBD	BOILER BLOWDOWN			CWT	CERAMIC WALL TILE	ELEM	ELEMENT	FND	FOUNDATION	HG	HOT GLYCOL	LAD	LADDER	MFR	MANUFACTURE (R)	PL	PLATE, PROPERTY LINE	REG	REGISTER			TME	TO MATCH EXISTING	VTR	VENT THROUGH ROOF		
BC	BOTTOM OF CURB	CFT	CERAMIC FLOOR TILE	D		ELEV	ELEVATION, ELEVATOR	FOB	FREIGHT ON BOARD, FLAT ON BOTTOM	HIP	HIGH IMPACT PANEL	LAM	LAMINATE (D)	MH	MAN HOLE	PLAM	PLASTIC LAMINATE	REINF	REINFORCE (D) (ING)					VWC	VINYL WALL COVERING		
BCU	BLOWER COIL UNIT	CG	CEILING GRILLE	D	DIESEL FUEL, DEPTH	EM	EMERGENCY	FOG	FUEL OIL GAUGE	HM	HOLLOW METAL	LAT	LAVATORY	MIN	MINIMUM	PLAS	PLASTER, PLASTIC	REM	REMOVED								
				DB	DRY BULB	EMT	ELECTRICAL METALLIC TUBING	FOR	FUEL OIL RETURN	HORZ	HORIZONTAL	LB	POUND	MISC	MISCELLANEOUS	PLF	POUNDS PER LINEAR FOOT										

Drawn By:	Date:	Drawing Number:
TTAE	June 8, 2026	AA130
Project No.: 123174-23001.10		

BUILDING DESIGNATOR
DISCIPLINE DESIGNATOR
SHEET TYPE DESIGNATOR
SHEET SEQUENCE DESIGNATOR

TETRA TECH
ARCHITECTS & ENGINEERS

Architecture Engineering Planning for High Performance Facilities

The engineer that has signed this document certifies that to the best of their knowledge, information and belief, the asbestos plans and specifications are in accordance with applicable requirements of the New York State Uniform Fire Prevention and Building Code, Construction Standards of the Commissioner of Education, New York State Department of Labor Part 56 of Title 12, and the United States Environmental Protection Agency Hazard Emergency Response ACT Regulations. Kevin C. Terry is accredited to the EPA and New York State under AHERA Regulations as an Asbestos Project Designer (Asbestos Handling Certificate Number 14-20336). It is a violation of the Education Law of the State of New York for any person to alter or modify this document in any way unless acting under the direction of a licensed professional engineer.

To the best of the Architect's knowledge, information and belief, the design of this project conforms to all applicable provisions of the New York State Uniform Fire Prevention and Building Code, the New York State Energy Conservation Code, and the building standards of the New York State Education Department. It is a violation of the Education Law of the State of New York for any person to alter or modify this document in any way unless acting under the direction of a licensed architect.

STATE OF NEW YORK · KEVIN CHARLES TERRY · 079083 · LICENSED PROFESSIONAL ENGINEER
Reg. Expires: 10/31/2027

STATE OF NEW YORK · KEVIN CHARLES TERRY · 079083 · LICENSED PROFESSIONAL ENGINEER
Reg. Expires: 10/31/2027

Volume 1 of 1

123174-23001.10
June 8, 2026

Set No.

Drawing Number:
G001

Tetra Tech Engineers, Architects & Landscape Architects, P.C.

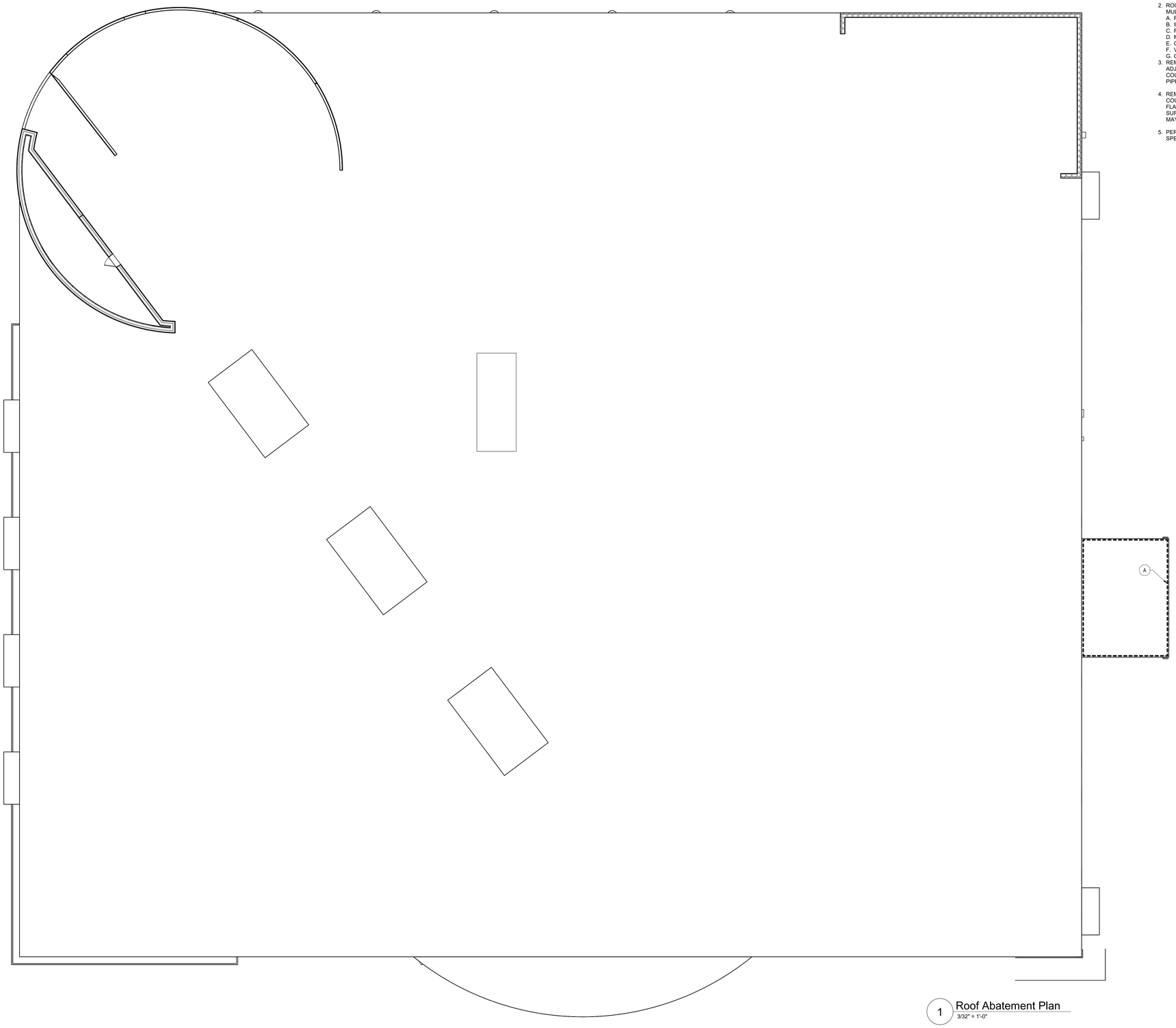

1 Roof Abatement Plan
3/32" = 1'-0"

Roof System Abatement Notes

1. AT THE PERIMETER OF THE ROOF, FLASHING CEMENT/MASTIC IS ASBESTOS CONTAINING. REMOVE AND DISPOSE ALL ROOFING MATERIALS AS ASBESTOS CONTAINING A MINIMUM OF 12 INCHES FROM THE EDGE OF THE PERIMETER AT INDICATED LOCATIONS.

2. ROOF SYSTEM INCLUDES, WITHOUT LIMITATION (INCLUDING MULTIPLE LAYERS):
   A. ROOF MEMBRANE
   B. INSULATION
   C. FLASHING MATERIALS
   D. MASTIC / PATCHES
   E. COATINGS
   F. VAPOR BARRIERS
   G. CAULKING
3. REMOVE ALL MATERIALS COMPLETELY FROM THE SUBSTRATE AND ADJACENT MATERIALS, SUCH AS THE ROOF DECK, WALLS, COUNTERFLASHING, COPING STONE, METAL COPING COPING, VENT PIPES, AND HVAC EQUIPMENT.

4. REMOVE ALL FLASHING MATERIALS FROM THE SUBSTRATE, COUNTERFLASHING AND ADJACENT SURFACES. REMOVE ALL FLASHING MATERIALS FROM ALL VERTICAL AND SLANTED SURFACES. REMOVE ALL FLASHING MATERIALS AND MASTIC THAT MAY BE IMPACTED BY DEMOLITION WORK.

5. PERFORM WORK IN ACCORDANCE WITH CODE RULE 56-11.6 AND SPECIFICATION SECTION 028200 - ASBESTOS ABATEMENT.

Legend

(A) REMOVE ROOFING AT PERIMETER WITH ASBESTOS CONTAINING FLASHING MASTIC/CEMENT

Asbestos Abatement General Notes

1. CONTRACTOR PERFORMING ANY AND ALL ASBESTOS ABATEMENT WORK SHALL BE A NYSDOL LICENSED ASBESTOS CONTRACTOR.

2. PERFORM ALL WORK IN ACCORDANCE WITH SPECIFICATION SECTION 02 82 00 - ASBESTOS ABATEMENT.

3. ASBESTOS CONTAINING MATERIALS SHALL BE ABATED IN ACCORDANCE WITH THE DRAWINGS AND SECTION 02 82 00 PRIOR TO ANY GENERAL DEMOLITION WORK THAT COULD DISTURB THOSE MATERIALS.

4. DO NOT SCALE DRAWINGS.

5. COORDINATE ALL WORK WITH OTHER CONTRACTORS.

6. THE CONTRACTOR IS RESPONSIBLE FOR OBTAINING ANY AND ALL VARIANCES FROM INDUSTRIAL CODE RULE 56, WHICH ARE DESIRED OR NECESSARY TO PERFORM THE WORK.

7. REMOVE ALL ABATED MATERIALS FROM THE WORK AREA AND /OR BUILDING IN SEALED BAGS, DRUMS OR PLASTIC SHEETING.

8. WHERE INTERIOR ABATEMENT OCCURS, ISOLATE THE WING OR MAJOR SECTION OF THE BUILDING, FROM OCCUPIED PORTIONS OF THE BUILDING WITH SEALED ISOLATION BARRIERS CONSTRUCTED OF NON-COMBUSTIBLE MATERIALS. THE ISOLATED PORTION OF THE BUILDING MUST CONTAIN EXITS THAT DO NOT PASS THROUGH THE OCCUPIED PORTION OF THE BUILDING AND VENTILATION SYSTEMS SHALL BE PHYSICALLY SEPARATED AND SEALED AT THE ISOLATION BARRIER.

Lead Safe Work Practices

1. EACH PRIME CONTRACTOR IS RESPONSIBLE FOR THEIR OWN WORK WHICH WILL DISTURB LEAD PAINTED OR CONTAINING MATERIALS IN AN AUXILLARY MANNER. CONTRACTOR RESPONSIBLE FOR ABATEMENT SHALL BE RESPONSIBLE FOR ALL LEAD WORK EXPLICITLY INDICATED HEREIN.

2. LEAD BASED PAINT HAS BEEN IDENTIFIED ON THE FOLLOWING COMPONENTS:
   A. xxxxx

3. PERFORM ALL WORK THAT WILL DISTURB LBP IN ACCORDANCE WITH SECTION 02 83 00 - LEAD-SAFE WORK PRACTICES.

4. WHERE STRIPPING OF LEAD-BASED PAINT IS INDICATED, REMOVE THE LEAD-BASED PAINT FROM THE IDENTIFIED ITEM AND ADJACENT SURFACES.

5. WHERE REMOVAL OF A COMPONENT IS INDICATED, REMOVE AND DISPOSE OF THE ENTIRE COMPONENT AND REMOVE RESIDUAL PAINT FROM ADJACENT SURFACES.

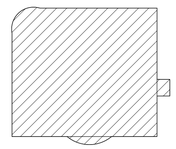

Key Plan
N.T.S.

N

Rev. No.:	Date:	Description:

TOMPKINS COUNTY

complex world | CLEAR SOLUTIONS

Tetra Tech Engineers, Architects & Landscape Architects, P.C.

STATE OF NEW YORK · KEVIN CHARLES TERRY · 079083 · LICENSED PROFESSIONAL ENGINEER

Reg. Expires: 10/31/2027

TETRA TECH
ARCHITECTS & ENGINEERS

Tompkins County
Ithaca, NY

Alterations to:
Tompkins County: Public Library
Exterior Upgrades Project

Abatement Plan

Drawn By:	Date:	Drawing Number:
TJT	June 8, 2026	AH100
Project No.: 123174-23001.10		

It is a violation of the Education Law of the State of New York for any person to alter or modify this document in any way unless acting under the direction of a licensed architect.

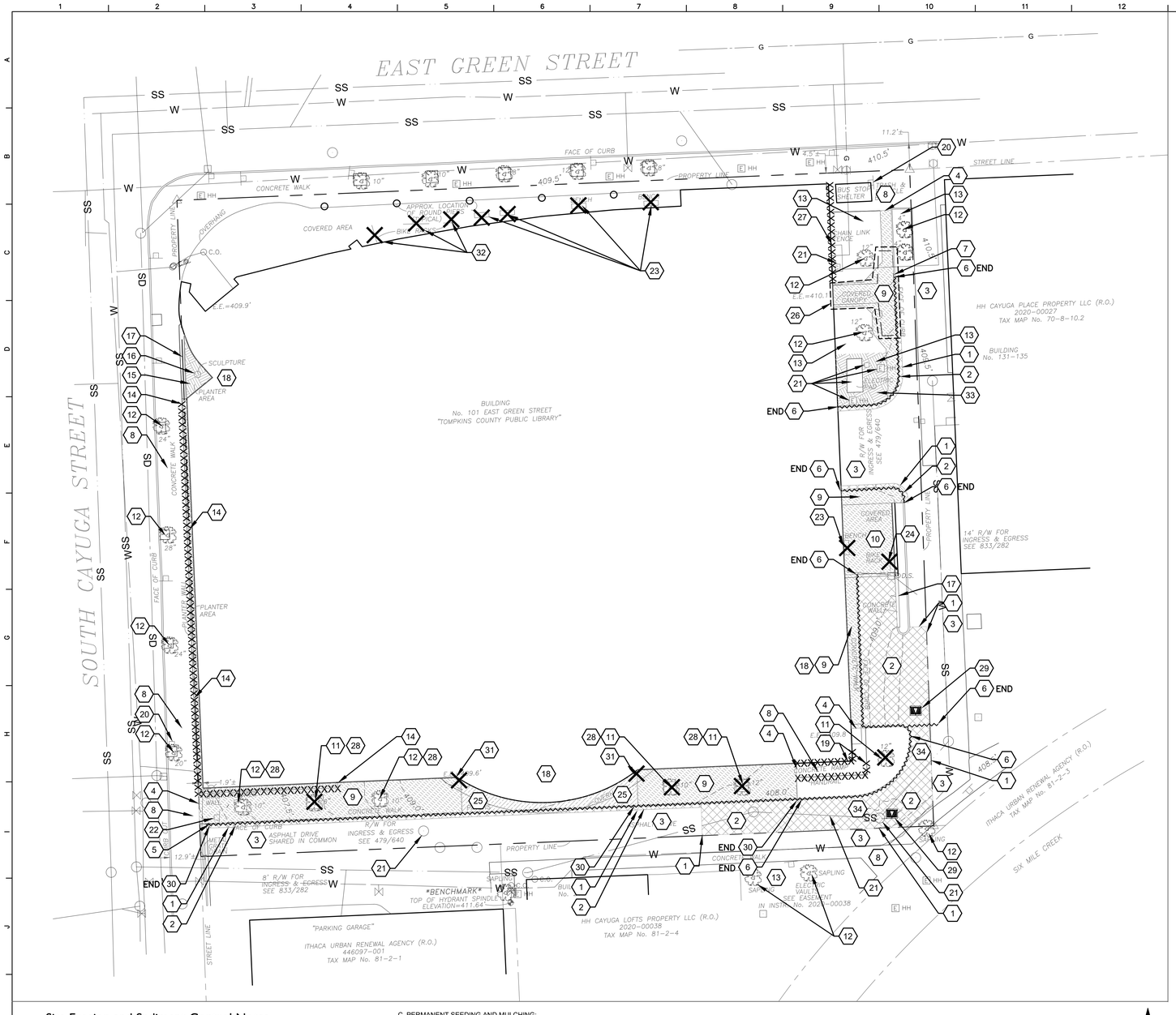

Site Erosion and Sediment Control Notes

1. ALL SOIL EROSION AND SEDIMENT CONTROL PRACTICES WILL BE INSTALLED IN ACCORDANCE WITH THE STANDARDS SPECIFIED IN THE NEW YORK STATE STANDARDS AND SPECIFICATIONS FOR EROSION AND SEDIMENT CONTROL (BLUE BOOK), LATEST EDITION, AND WILL BE INSTALLED IN PROPER SEQUENCE AND MAINTAINED UNTIL PERMANENT PROTECTION IS ESTABLISHED.

2. ANY DISTURBED AREA THAT WILL BE LEFT EXPOSED FOR MORE THAN THIRTY DAYS AND NOT SUBJECT TO CONSTRUCTION TRAFFIC SHALL IMMEDIATELY RECEIVE A TEMPORARY SEEDING. IF THE SEASON PROHIBITS TEMP. SEEDING, THE DISTURBED AREA WILL BE MULCHED WITH SALT HAY OR EQUIVALENT AND BOUND IN ACCORDANCE WITH NYS DEC STANDARDS.

3. NYSDEC REGULATIONS REQUIRE THAT DISTURBANCE BE LIMITED TO AREAS LESS THAN 5-ACRES AT ANY ONE TIME.

4. IMMEDIATELY FOLLOWING INITIAL DISTURBANCE OR ROUGH GRADING, ALL CRITICAL AREAS SUBJECT TO EROSION WILL RECEIVE A TEMPORARY SEEDING IN COMBINATION WITH STRAW MULCH OR A SUITABLE EQUIVALENT ACCORDING TO THE NY STANDARDS

5. STABILIZATION SPECIFICATIONS:

   A. SOIL AMENDMENTS:

   LIME - PROVIDE GROUND LIMESTONE TO PH OF 6.0.

   FERTILIZER - 14 LBS/1,000 S.F., 5-10-10 OR EQUIVALENT WORKED INTO SOIL A MINIMUM OF 4".

   B. TEMPORARY SEEDING AND MULCHING:

   SEED - ANNUAL RYEGRASS 30 LBS/ACRE; PLANT BETWEEN MARCH 1 AND MAY 15 OR BETWEEN AUGUST 15 AND OCTOBER 1. USE WINTER RYE IF SEEDING IN OCT./NOV.

   MULCH - SALT HAY OR SMALL GRAIN STRAW AT A RATE OF 90 LBS/1,000 S.F., TO BE APPLIED ACCORDING TO THE NY STANDARDS. MULCH SHALL BE SECURED BY WOOD FIBER MULCH (HYDROMULCH) AT 11-17 LBS./1,000 S.F. WOOD FIBER MULCH MUST BE APPLIED THROUGH A HYDROSEEDER IMMEDIATELY AFTER MULCHING.

   C. PERMANENT SEEDING AND MULCHING:

   SEED - REFER TO PROJECT MANUAL SPECIFICATIONS FOR SEED TYPE, RATE OF SEEDING AND SEASON OF SEEDING. RATE AND SEED TYPE ARE TO MEET THE MINIMUM REQUIREMENTS OF THE NY STANDARDS.

   MULCH - REFER TO PROJECT MANUAL SPECIFICATIONS FOR MULCH TYPE, RATE OF APPLICATION, ETC. RATE AND MULCH TYPE ARE TO MEET THE MINIMUM REQUIREMENTS OF THE NY STANDARDS.

6. THE SITE SHALL AT ALL TIMES BE GRADED AND MAINTAINED SUCH THAT ALL STORMWATER RUN-OFF IS DIVERTED TO SOIL EROSION AND SEDIMENT CONTROL FACILITIES.

7. ALL SEDIMENTATION STRUCTURES WILL BE INSPECTED AND MAINTAINED ON A REGULAR BASIS.

8. STOCKPILES ARE NOT TO BE LOCATED WITHIN 50' OF A FLOODPLAIN, SLOPE, ROADWAY, OR DRAINAGE FACILITY. THE BASE OF ALL STOCKPILES SHOULD BE PROTECTED BY A SILT DAM OR STRAW BALE DIKE IN ACCORDANCE WITH NY STANDARDS.

9. ALL CATCH BASIN INLETS WILL BE PROTECTED WITH A FABRIC FILTER CRUSHED STONE OR FABRIC FILTER (FILTER DETAILS APPEAR ON THE PLAN).

10. ALL STORM DRAINAGE OUTLETS WILL BE STABILIZED, AS REQUIRED, BEFORE THE DISCHARGE POINTS BECOME OPERATIONAL.

11. PAVED ROADWAYS MUST BE KEPT CLEAN AT ALL TIMES.

I Site Demolition and SESC Plan
1" = 20'

0 10' 20' 40'
SCALE: 1" = 20'

N

Site Preparation/Demolition & SESC Key Notes

1 SAW CUT EXISTING ASPHALT PAVEMENT, LEAVING NEAT, SMOOTH AND STRAIGHT EDGE (TYPICAL).

2 REMOVE EXISTING ASPHALT AND SUBBASE AS NECESSARY TO ALLOW INSTALLATION OF PROPOSED IMPROVEMENTS (TYPICAL).

3 EXISTING ASPHALT TO REMAIN, PROTECT. (TYPICAL)

4 SAW CUT EXISTING CONCRETE SIDEWALK AT NEAREST JOINT, LEAVING A NEAT, SMOOTH, AND STRAIGHT EDGE (TYPICAL).

5 SAW CUT EXISTING CONCRETE CURB SECTION AT NEAREST JOINT, LEAVING A NEAT, SMOOTH, AND STRAIGHT EDGE (TYPICAL).

6 REMOVE EXISTING GRANITE CURB IN LOCATION SHOWN. PROTECT FROM DAMAGE DURING REMOVAL. IF IN GOOD SHAPE PROTECT FOR REINSTALL

7 EXISTING CURB TO REMAIN, PROTECT.

8 EXISTING CONCRETE SIDEWALK TO REMAIN, PROTECT.

9 REMOVE EXISTING CONCRETE SIDEWALK AND SUBBASE AS NECESSARY TO ALLOW INSTALLATION OF PROPOSED IMPROVEMENTS (TYPICAL).

10 REMOVE EXISTING CONCRETE SLAB AND SUBBASE NECESSARY TO ALLOW INSTALLATION OF PROPOSED IMPROVEMENTS (TYPICAL).

11 REMOVE EXISTING TREE, INCLUDING STUMP, ROOT AND ALL ORGANIC MATTER.

12 EXISTING TREE TO REMAIN, PROTECT. TYPICAL.

13 EXISTING LAWN AREA TO REMAIN - REPAIR AS REQUIRED

14 ALTERNATE 1 - REMOVE EXISTING BRICK PLANTER INCLUDING ALL SOIL AND VEGETATION WITHIN PLANTER. PLANTER FOUNDATION SHOULD REMAIN. SCREEN, AND STOCKPILE TOPSOIL. STOCKPILE LOCATION TO BE APPROVED BY OWNER'S REPRESENTATIVE.

15 REMOVE ALL MATERIAL FROM WITHIN PLANTER.

16 OWNER TO REMOVE, PROTECT, STORE AND REINSTALL STATUE AND BASE.

17 EXISTING RETAINING WALL TO REMAIN, PROTECT.

18 EXISTING BUILDING STRUCTURE TO REMAIN, PROTECT. TYPICAL.

19 REMOVE EXISTING HAND RAIL

20 EXISTING SIGNAGE TO REMAIN, PROTECT. TYPICAL.

21 EXISTING UTILITY TO REMAIN, PROTECT. TYPICAL.

22 REMOVE AND PROTECT EXISTING SIGN FOR REINSTALLATION.

23 REMOVE AND DISPOSE OF EXISTING BENCH.

24 EXISTING BIKE RACK TO BE REMOVE AND PROTECTED FOR REINSTALLATION.

25 REMOVE AND PROTECT EXISTING BRICK PAVERS FOR REINSTALLATION. REMOVE SUBBASE AS NECESSARY TO ALLOW INSTALLATION OF PROPOSED IMPROVEMENTS (TYPICAL).

26 CANOPY TO BE REMOVED AND BE REINSTALLED WITH MODIFICATIONS, REFER TO STRUCTURAL PLANS.

27 REMOVE IVY VINES AND STUMPS TO BELOW GRADE

28 EXISTING TREE PLANTER BOXES AND GRATES TO BE REUSED, PROTECT. TYPICAL.

29 PROVIDE DROP-IN INLET PROTECTION, TYPICAL. SEE TO DETAIL 6 / AC500.

30 REMOVE EXISTING CONCRETE CURB.

31 REMOVE EXISTING PVC PIPE TO BELOW GRADE.

32 REMOVE AND DISPOSE OF EXISTING BIKE RACK.

33 STRIP, SCREEN, AND STOCKPILE TOPSOIL.STOCKPILE LOCATION TO BE APPROVED BY OWNER'S REPRESENTATIVE. REMOVE SUBGRADE AS REQUIRED TO MEET DESIGN GRADES AND ACCOMMODATE NEW WORK. HAND DIG IN VICINITY OF EXISTING BURIED UTILITIES TO AVOID DAMAGE (TYPICAL).

34 EXISTING UTILITY, LOCATE AND V.I.F., HAND DIG IN THIS VICINITY.

Site Preparation/Demolition General Notes

1. THESE GENERAL SITE / PREPARATION / DEMOLITION NOTES REFER TO C-SERIES DRAWINGS.

2. THE INTENT OF THIS DRAWING IS TO INDICATE PREPARATORY WORK, REMOVALS AND DEMOLITION NECESSARY TO CONSTRUCT THE PROJECT AS SHOWN ON THE REST OF THE CONTRACT DRAWINGS. SOME NOTES ARE GENERAL IN NATURE AND IT SHALL BE UNDERSTOOD THAT IT IS NOT FEASIBLE TO INDICATE EACH AND EVERY SPECIFIC REMOVAL. SITE PREPARATION / DEMOLITION DRAWINGS SHALL NOT BE USED ALONE, BUT SHALL BE USED IN CONJUNCTION WITH THE OTHER DRAWINGS FOR WORK TO BE REMOVED, REUSED, AND / OR REVISED NOT INDICATED HERE.

3. CONTRACTOR TO MAINTAIN UTILITY SERVICES TO BUILDINGS TO REMAIN. IF UTILITY SERVICES MUST BE INTERRUPTED THE CONTRACTOR SHALL COORDINATE THAT SHUTDOWN TO MINIMIZE IMPACT TO BUILDINGS. SEE PROJECT MANUAL REGARDING COORDINATION OF DEMOLITION WORK WITH UTILITY COMPANIES.

4. THE CONTRACTOR IS RESPONSIBLE TO MAINTAIN SAFE SITE ACCESS TO PEDESTRIAN, VEHICULAR TRAFFIC, EMERGENCY AND HEALTH SAFETY AGENCIES. IF ACCESS WILL BE COMPROMISED IT WILL BE THE RESPONSIBILITY OF THE CONTRACTOR TO COORDINATE AT LEAST ONE WEEK IN ADVANCE WITH THE OWNER'S REPRESENTATIVE AND HEALTH SAFETY AGENCIES, UNLESS OTHERWISE NOTED IN PROJECT MANUAL.

5. UTILITIES, SIDEWALKS, PAVEMENT, SLABS, FOUNDATIONS, AND MISCELLANEOUS FEATURES NOTED TO BE DEMOLISHED SHALL BE SPOILED OFF-SITE IN A LEGAL MANNER UNLESS OTHERWISE DIRECTED BY THE OWNER'S REPRESENTATIVE. NO BURNING OF DEBRIS SHALL BE ALLOWED. IMMEDIATELY BACKFILL VOIDS WITH COMPACTED GRANULAR MATERIAL AS SPECIFIED.

6. WHEN A SITE FEATURE IS INDICATED TO BE REMOVED, THE SITE FEATURE, INCLUDING APPURTENANCES AND FOOTINGS, SHALL BE DISPOSED OF LEGALLY OFF SITE, UNLESS OTHERWISE INDICATED. IMMEDIATELY BACKFILL VOIDS WITH COMPACTED GRANULAR MATERIALS AS SPECIFIED.

7. WHEN A SITE FEATURE IS INDICATED TO REMAIN, IT SHALL BE PROTECTED AS INDICATED AND / OR SPECIFIED. WHEN DISTURBANCE OCCURS AROUND AN EXISTING FEATURE, THE CONTRACTOR SHALL USE ADDITIONAL PRECAUTIONS INCLUDING, BUT NOT LIMITED TO HAND DIGGING TO PROTECT THE FEATURE.

8. EXISTING ON-SITE UTILITIES SHALL REMAIN UNLESS DESIGNATED FOR REMOVAL. PROTECT ALL EXISTING UTILITIES TO REMAIN.

9. MANHOLES, CATCH BASINS, CLEAN OUTS, VALVE BOXES, FRAMES, COVERS AND GRATES REMAINING IN USE SHALL BE PROTECTED AND ADJUSTED TO FINAL GRADES. CONTRACTOR SHALL MAINTAIN POSITIVE DRAINAGE AT ALL TIMES.

10. CONTRACTOR IS RESPONSIBLE TO VERIFY GRADES AND UTILITIES SHOWN ON EXISTING CONDITIONS PLAN PRIOR TO START OF WORK. DISCREPANCIES ARE TO BE DOCUMENTED AND SUBMITTED TO THE OWNER'S REPRESENTATIVE AT THE TIME OF DISCOVERY.

11. CONTRACTOR SHALL BE RESPONSIBLE FOR RELOCATIONS, INCLUDING, BUT NOT LIMITED TO, UTILITIES, STORM DRAINAGE, SIGNS, ETC. AS INDICATED ON DESIGN DOCUMENTS.

12. IF EXISTING SITE FEATURES TO REMAIN ARE DAMAGED DURING CONSTRUCTION BY CONTRACTOR, SITE FEATURES SHALL BE REPAIRED IN-KIND, TYPICAL.

13. CONTRACTOR TO REMOVE OR RELOCATE, WHEN APPLICABLE, ALL CONNECTING IMPROVEMENTS, DRAIN PIPES, SANITARY SEWER PIPES, POWER POLES, AND GUY WIRES, WATER METERS AND WATER LINES, WELLS, SIDEWALKS, SIGN POLES, UNDERGROUND GAS, SEPTIC TANKS, AND ASPHALT, SHOWN AND NOT SHOWN, WITHIN CONSTRUCTION LIMITS AND WHERE NEEDED, TO ALLOW FOR NEW CONSTRUCTION AS SHOWN.

14. CONTRACTOR TO NOTIFY OWNERS REPRESENTATIVE IF UNIDENTIFIED UTILITIES ARE ENCOUNTERED INCLUDING, BUT NOT LIMITED TO, STORM SEWER, SANITARY SEWER, TELECOMMUNICATIONS SERVICE, ELECTRICAL SERVICE, GAS SERVICE, WATER SERVICE, IRRIGATION LINES. UTILITIES LINES TO REMAIN UNDISTURBED UNTIL DIRECTED BY OWNERS REPRESENTATIVE.

15. CONTRACTOR SHALL REQUEST UFPO PRIOR TO START OF ANY WORK. "DIG SAFELY NEW YORK - CALL 811 - BEFORE YOU DIG".

General Site Notes

1. THESE GENERAL SITE NOTES APPLY TO C-SERIES DRAWINGS.

2. REFER TO SURVEY FOR INFORMATION ON EXISTING FEATURES. IF EXISTING FEATURES ARE MISSING, MODIFIED, OBSCURED, OR THERE IS A CONFLICT BETWEEN HOW AN EXISTING FEATURE IS PORTRAYED ON THIS SHEET AND THE SURVEY, THE SURVEY SHALL GOVERN.

3. PRIOR TO CONSTRUCTION, LOCATE AND PROMINENTLY MARK THE PROPERTY LINES IN THE FIELD. PROTECT PROPERTY LINE MARKING AND MONUMENTS DURING CONSTRUCTION UNTIL FINAL ACCEPTANCE.

4. THE SURVEY(S) INCLUDED IN THESE DOCUMENTS ARE PROVIDED FOR INFORMATION ONLY AND ARE THE BASE INFORMATION USED TO PREPARE THE WORK INDICATED ON THESE DRAWINGS. THE DATA INDICATED REGARDING EXISTING CONDITIONS IS NOT INTENDED AS REPRESENTATIONS OR WARRANTIES OF THEIR ACCURACY. BY INCLUSION OF THE SURVEY(S) IN THIS SET OF DOCUMENTS, TETRA TECH AND THE OWNER DO NOT ASSUME RESPONSIBILITY FOR ACCURACY OF THE SURVEY, NOR FOR INTERPRETATIONS OR CONCLUSIONS DRAWN THEREFROM BY THE CONTRACTOR.

5. THE CONTRACTOR SHALL FIELD VERIFY EXISTING FEATURES, CONDITIONS, UTILITIES, PROPERTY LINES AND TOPOGRAPHY PRIOR TO COMMENCEMENT OF WORK. ANY DISCREPANCIES WHICH WILL AFFECT THE WORK REQUIRED AS PART OF THE CONTRACT DOCUMENTS SHALL BE IMMEDIATELY REPORTED IN WRITING TO THE ARCHITECT. COMMENCEMENT OF WORK WITHOUT THIS WRITTEN NOTIFICATION SHALL CONSTITUTE CONTRACTOR ACCEPTANCE OF THE EXISTING INFORMATION INDICATED ON THE DRAWINGS AS ACCURATE. NO ADJUSTMENTS TO THE CONTRACT WILL BE MADE FOR THE DISCREPANCIES BROUGHT TO THE OWNER'S ATTENTION AFTER WORK HAS BEGUN.

6. NO ATTEMPT HAS BEEN MADE TO SHOW ALL UNDERGROUND UTILITIES ON THIS DRAWING. CONTACT UNDERGROUND UTILITY LOCATION ORGANIZATION AND LOCAL UTILITY COMPANIES TO VERIFY THE LOCATION OF UTILITIES PRIOR TO EARTHWORK, TRENCHING OR EXCAVATION OPERATIONS.

7. CONTRACT LIMIT LINE SHALL BE TEN FEET OUTSIDE OF LIMITS OF WORK INDICATED ON THESE DRAWINGS AND NOT TO EXTEND BEYOND THE PROPERTY LINE UNLESS OTHERWISE INDICATED.

8. CONTRACTOR SHALL PROVIDE CONSTRUCTION / PROTECTIVE FENCING OR OTHER MEANS NECESSARY TO PROTECT WORK AND TO ENSURE SAFETY OF THE PUBLIC, PEDESTRIANS AND VEHICULAR TRAFFIC DURING CONSTRUCTION.

9. FOR INFORMATION REGARDING SUBSURFACE CONDITIONS AND TEST LOCATIONS, COORDINATE WITH OWNER REGARDING THE AVAILABILITY OF GEOTECHNICAL INFORMATION.

10. AT EDGE OF ALL NEW PAVING MEETING LAWN, REMOVE EXISTING TURF TO MINIMUM OF 4-FT FROM NEW PAVEMENT EDGE, UNLESS OTHERWISE NOTED. CUT NEAT REMOVAL LINE AND SCARIFY EXISTING GRADE. PROVIDE TAMPED TOPSOIL TO BRING EXISTING GRADE FLUSH WITH NEW PAVING. SLOPE LAWN AWAY FROM PAVING TO PREVENT PONDING. FINE GRADE, FERTILIZE, SEED AND MULCH IN ACCORDANCE WITH PROJECT MANUAL.

SITE DEMOLITION AND PREPARATION LEGEND

	REMOVE EXISTING ASPHALT PAVEMENT SECTION AND SUBBASE AS REQUIRED
	REMOVE EXISTING CONCRETE PAVEMENT SECTION AND SUBBASE AS REQUIRED
	REMOVE EXISTING BRICK PAVER SECTION AND SUBBASE
XXXX	REMOVE SITE FEATURE AS INDICATED IN DEMOLITION KEYNOTES (Outline of Feature)
X	REMOVE SITE FEATURE AS INDICATED IN DEMOLITION KEYNOTES (Specific Feature)
	REMOVE EXISTING VEGETATION AND SOIL AS REQUIRED
	REMOVE SITE FEATURE AS INDICATED IN DEMOLITION KEYNOTES (Specific Feature)

Rev. No.:	Date:	Description:

complex world | CLEAR SOLUTIONS

Tetra Tech Engineers, Architects & Landscape Architects, P.C.

Reg. Expires: 10/31/2027

TETRA TECH
ARCHITECTS & ENGINEERS

Tompkins County
Ithaca, NY

Alterations to:
Tompkins County: Public Library
Exterior Upgrades

Site Demolition and SESC Plan

Drawn by:	Date:	Drawing No.:
LGB	June 8, 2026	AC100
Project No.: 123174-23001.10		

It is a violation of the Education Law of the State of New York for any person to alter or modify this document in any way unless acting under the direction of a licensed architect.

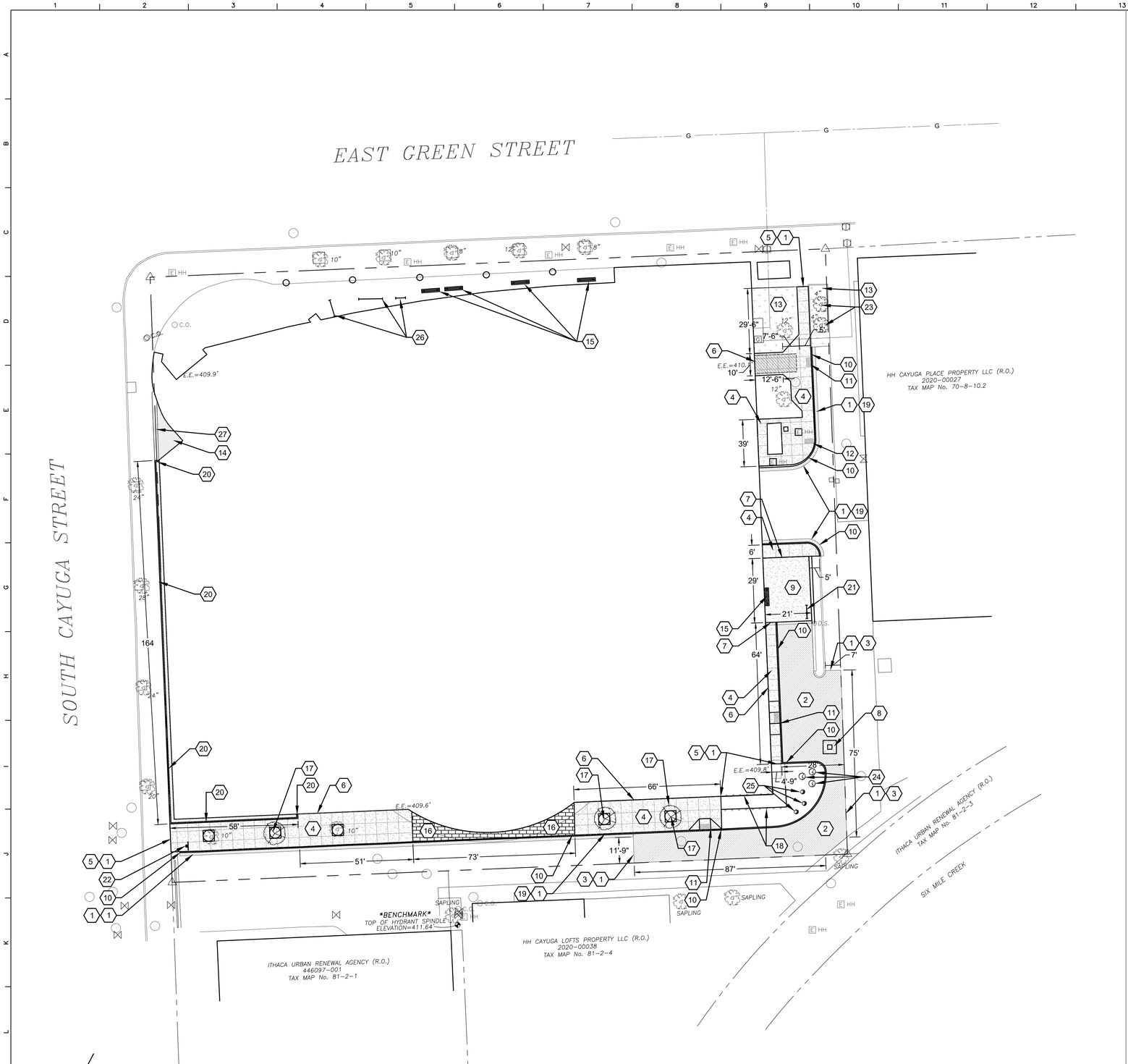

Site Layout Keynotes

1 SMOOTH TRANSITION FROM PROPOSED SURFACE TO ADJACENT EXISTING SURFACE, TYPICAL.

2 AUTO DUTY ASPHALT PAVING. SEE DETAIL 1 / AC500.

3 NEW ASPHALT PAVING AT EXISTING ASPHALT (TYPICAL). SEE DETAIL 2 / AC500.

4 CONCRETE SIDEWALK. SEE DETAILS 3 AND 5 / AC500.

5 NEW CONCRETE SIDEWALK AT EXISTING CONCRETE SIDEWALK. SEE DETAIL 4 / AC500.

6 EXPANSION JOINT AT EXISTING SLAB. SEE DETAIL 10 / AC500.

7 EXPANSION JOINT AT NEW SLAB. SEE DETAIL 11 / AC500.

8 CONCRETE APRON AROUND EXISTING / NEW STORM INLET IN ASPHALT PAVEMENT (TYPICAL). SEE DETAIL 17 / AC500.

9 CONCRETE SLAB. SEE STRUCTURAL DETAILS.

10 GRANITE CURB AT NEW CONCRETE SIDEWALK. SEE DETAIL 7 / AC500.

11 ACCESSIBLE RAMP WITH DETECTABLE WARNING SURFACE AND DROP CURB. SEE DETAIL 13 / C500

12 DROP CURB. SEE DETAIL 16 / AC500

13 TOP DRESS - PROVIDE 2-INCHES OF AMENDED TOPSOIL, FINE GRADE, SEED, FERTILIZE AND MULCH. LEAVE NEAT SMOOTH EDGE, TYPICAL.

14 PROVIDE 3" OF ENGINEER WOOD FIBER.

15 STAINLESS STEEL BENCH WITHOUT BACK. SEE PROJECT MANUAL SECTION 12 93 00 - SITE FURNISHING.

16 BRICK PAVERS ON CONCRETE. SEE DETAIL 12 / AC500 AND PROJECT MANUAL SECTION 31 14 00.

17 PROVIDE JAPANESE ZELKOVA, SEE PROJECT MANUAL 32 93 00. REUSE EXISTING GRATE.

18 PROVIDE HAND RAILS, REBUILD EXISTING SIDE MOUNT AND WALL MOUNT, SEE DETAIL 21/ AC500 SEE PROJECT MANUAL 05 52 13 TUBE RAILINGS.

19 ASPHALT PAVING PATCH AT CURB. SEE DETAILS 8, AND 9 / AC500.

20 ALTERNATE NO. 1: CAST IN PLACE PLANTER BRICK AND PRECAST CONCRETE CAP. SEE DETAIL 19 / AC500. REFER TO 04 01 20.91 MASONRY RESTORATION SPEC AND 03 45 00 PRECAST CONCRETE PROJECT MANUAL

21 REINSTALL BIKE RACK.

22 REINSTALL SIGNAGE. SEE DETAIL 20 / AC500.

23 PRUNE TREE.

24 PROVIDE RED-OSIER DOGWOOD. SEE PROJECT MANUAL 32 93 00.

25 PROVIDE ANTHONY WATERER SPIREA. SEE PROJECT MANUAL 32 93 00.

26 STAINLESS STEEL BIKE RACK. SEE PROJECT MANUAL SECTION 12 93 00 - SITE FURNISHING.

27 PATCH EXISTING CAPSTONE CRACKS, VOIDS, AND CHIPPED OR MISSING AREAS WITH COMPATIBLE CONCRETE REPAIR MORTAR. MATCH ADJACENT SURFACES, PROFILES, AND FINISHES.

Planting Notes

1. CONTRACTOR IS RESPONSIBLE FOR COMPLETE COVERAGE OF PLANTING BEDS AT SPACING SHOWN.
2. PROPOSED PLANTING MATERIALS ARE SUBJECT TO THE APPROVAL OF THE ARCHITECT BEFORE, DURING AND AFTER INSTALLATION.
3. PLANT MATERIALS TO BE COMMERCIALLY GROWN AND BUD HARDY WITHIN USDA HARDINESS ZONE OF THE PROJECT.
4. PLANTING AREAS MUST BE NEATLY CUT OR EDGED AT BED LINE AND COMPLETELY MULCHED WITHIN BEDLINE WITH 3" CONTINUOUS SETTLED DEPTH OF MULCH SPECIFIED.
5. STAKE LOCATIONS OF INDIVIDUAL TREES, SHRUBS AND PLANT BEDLINES. NOTIFY ARCHITECT A MINIMUM OF ONE WEEK PRIOR TO PLANTING. STAKED LOCATIONS TO BE APPROVED BY ARCHITECT PRIOR TO INSTALLATION, EXCAVATION OF PITS OR PREPARATION OF BEDS.
6. IF LOCATION OF TREES ARE SHOWN WITH ROOT BALL WITHIN FIVE FEET OF UNDERGROUND UTILITIES, TREES ARE WITHIN TWENTY FEET OF OVERHEAD WIRES OR OTHER OBSTRUCTION IS ENCOUNTERED, INFORM ARCHITECT AND DO NOT PROCEED WITH PLANTING UNTIL ARCHITECT APPROVES LOCATION ADJUSTMENTS.
7. LEGIBLY TAG PLANTS WITH NOMENCLATURE FROM "STANDARDIZED PLANT NAMES" LISTING BY AMERICAN JOINT COMMITTEE OF HORTICULTURE. RETAIN TAGS ON PLANT MATERIALS AND SHIPPING RECEIPTS FOR ARCHITECT REVIEW. TAGS TO BE REMOVED ONLY AFTER ARCHITECT'S FINAL REVIEW OF PLANT MATERIALS. PLANT MATERIALS TO BE TRUE TO NAME, FORM, SIZE AND LOCATION INDICATED ON DRAWINGS AND SPECIFIED.
8. FULLY MAINTAIN PLANTING AND LAWN AREAS INCLUDING, BUT NOT LIMITED TO: STAKING, WATERING, SPRAYING, PRUNING, MULCHING AND FERTILIZING UNTIL THE PROJECT IS FINAL REVIEWED AND ACCEPTED BY ARCHITECT.
9. PLANT MATERIAL WHICH DIES, TURNS BROWN, DEFOLIATES OR IS DEEMED UNSATISFACTORY BY ARCHITECT PRIOR TO ACCEPTANCE OF THE WORK SHALL BE PROMPTLY REMOVED FROM THE SITE AND REPLACED WITH MATERIAL OF THE SAME SPECIES, QUANTITY AND SIZE UNLESS A SUBSTITUTION IS APPROVED BY THE ARCHITECT.
10. B&B AND CONTAINER PLANTS WITH LOOSE OR CRACKED ROOTBALLS WILL NOT BE ACCEPTED.
11. REFER TO PLANTS SPECIFICATION FOR INFORMATION REGARDING PLANT SOIL REQUIREMENTS.
12. CONTRACTOR SHALL CAREFULLY ROOT PRUNE, BALL AND BURLAP AND TEMPORARILY HEEL-IN PLANT MATERIAL TO BE RELOCATED USING GOOD HORTICULTURAL PRACTICES. PLANTS MUST BE PLACED IN A PROTECTED AREA APPROVED BY THE ARCHITECT , WATERED DAILY DURING SUMMER MONTHS AND INSTALLED AT NEW LOCATIONS SHOWN ON DRAWINGS AS SOON AS CONSTRUCTION WILL PERMIT.

PLANTING SCHEDULE:

SYMBOL	BOTANICAL NAME	COMMON NAME	QTY	CALIPER	HEIGHT	SPACING	ROOT	REMARKS
⊗	Zelkova Serrata	Japanese Zelkova	3	2.5" – 3"	NA	as shown	B&B	Symmetrical; Uniform
⊘	Cornus Sericea	Red-Osier Dogwood	3	NA	2' – 3'	as shown	3 GAL. CONT	Symmetrical; Uniform
◕	Spiraea Japonica Anothony Waterer	Japanese Spirea	3	NA	2' – 3'	as shown	3 GAL. CONT	Symmetrical; Uniform

1 Site Layout and Planting Plan
1" = 20'

0 10' 20' 40'
SCALE: 1" = 20'

N

General Site Notes

1. REFER TO DRAWING AC100 FOR GENERAL SITE NOTES THAT APPLY TO ALL C-SERIES DRAWINGS.

Site Layout Notes

1. LAYOUT DIMENSIONS GIVEN ARE FROM FACE OF BUILDING (FOB), FACE OF CURB (F.O.C.), CENTER LINE (CL) AND EDGE OF PAVEMENTS UNLESS OTHERWISE NOTED.
2. OBJECTS ARE PARALLEL OR PERPENDICULAR TO EACH OTHER UNLESS OTHERWISE NOTED.
3. PAINTED TRAFFIC MARKINGS AND TRAFFIC SIGNS TO COMPLY WITH THE LATEST EDITION OF THE NYSDOT MANUAL OF UNIFORM TRAFFIC CONTROL DEVICES AND LOCAL REQUIREMENTS.
4. VERIFY DIMENSIONS IN FIELD WITH OWNER'S REPRESENTATIVE ANY DIMENSIONS NOTED AS "V.I.F."
5. AT EDGE OF NEW PAVING MEETING LAWN: ADD TOPSOIL ALONG EDGE OF NEW PAVING TO BRING ADJACENT GRADE FLUSH WITH EDGE OF NEW PAVING AT MAXIMUM 3% SLOPE. CUT NEAT LINE IN EXISTING LAWN AT NEW TOPSOIL LIMIT LINE. REFER TO PROJECT MANUAL SIDEWALK AND ASPHALT PAVEMENT SECTIONS FOR ADDITIONAL REQUIREMENTS.
6. SCORE CONCRETE SIDEWALKS AT 5-FT SQUARE UNLESS OTHERWISE NOTED.

Site Layout Legend

	CONCRETE PAVING
	ASPHALT PAVING - AUTO DUTY
	BUILDING ADDITION OVERHANG
	GRANITE CURB
	CONCRETE WALK
	TOPSOIL, LAWN SEEDING & MULCHING

Rev. No.:	Date:	Description:

TOMPKINS COUNTY

complex world | CLEAR SOLUTIONS

Tetra Tech Engineers, Architects & Landscape Architects, P.C.

STATE OF NEW YORK · KEVIN CHARLES TONE · 079083 · LICENSED PROFESSIONAL ENGINEER
Reg. Expires: 10/31/2027

TETRA TECH
ARCHITECTS & ENGINEERS

Tompkins County
Ithaca, NY

Alterations to:
Tompkins County: Public Library
Exterior Upgrades

Site Layout and Planting Plan

Drawn by:	Date:	Drawing No.:
LGB	June 8, 2026	AC120
Project No.: 123174-23001.10		

It is a violation of the Education Law of the State of New York for any person to alter or modify this document in any way unless acting under the direction of a licensed architect.

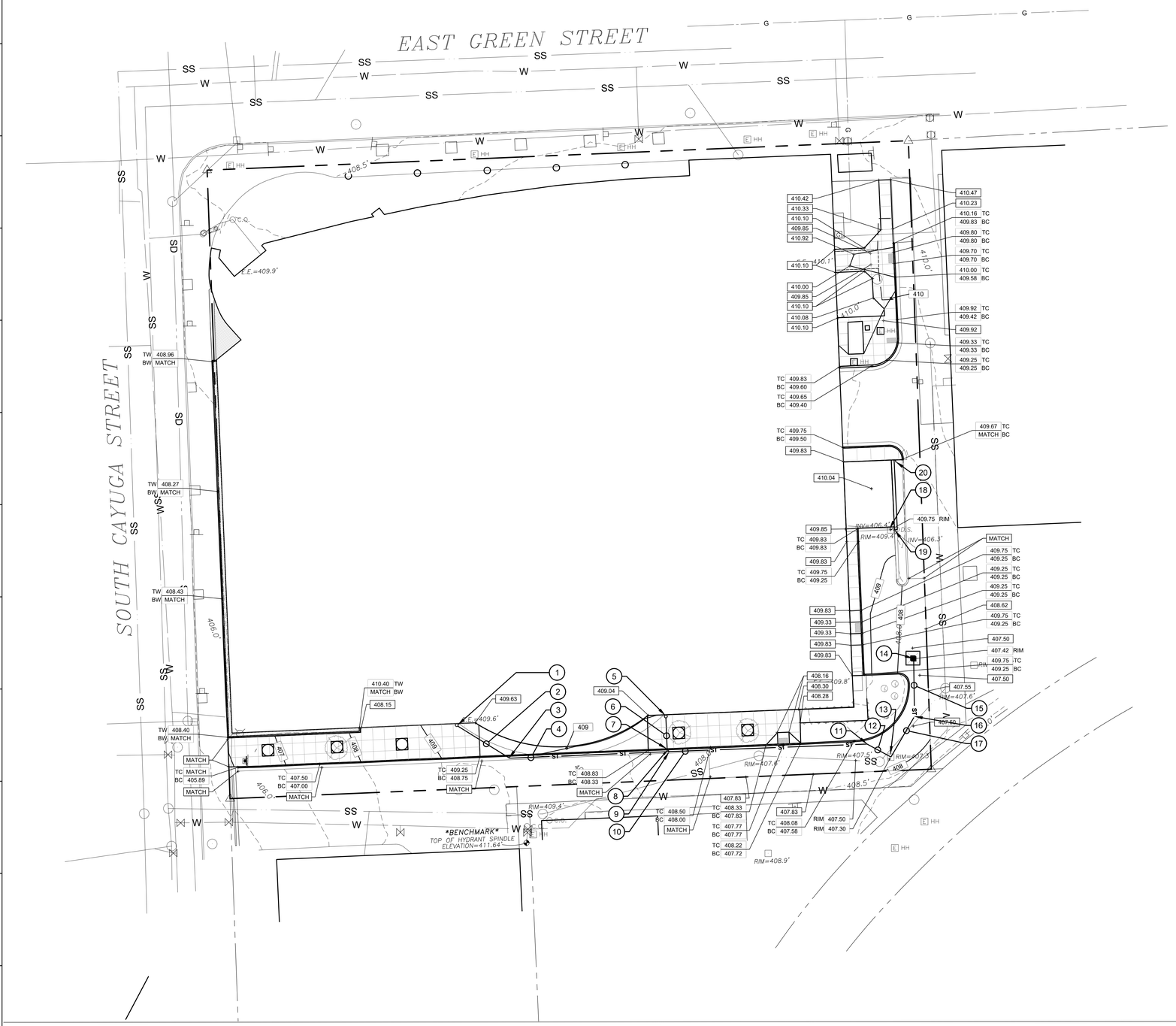

I Site Utility and Grading Plan
1" = 20'

0 10' 20' 40'
SCALE: 1" = 20'

General Utility Plan Notes

1. CONTRACTOR IS RESPONSIBLE FOR REPAIRS OR DAMAGE TO ANY EXISTING UTILITY DURING CONSTRUCTION AT NO COST TO THE OWNER.
2. SEE PROJECT MANUAL FOR BACKFILLING AND COMPACTION REQUIREMENTS FOR UTILITY TRENCHES.
3. FILL MATERIAL IS TO BE IN PLACE AND COMPACTED BEFORE INSTALLATION OF PROPOSED UTILITIES.
4. ALL WATER AND OTHER UTILITIES SHOULD BE KEPT TEN-FEET 10-FT) APART (PARALLEL) OR WITH 18 INCH CLEARANCE WHEN CROSSING VERTICALLY (OUTSIDE EDGE OF PIPE TO OUTSIDE EDGE OF PIPE.)
5. LINES UNDERGROUND SHALL BE INSTALLED, INSPECTED AND APPROVED BEFORE BACKFILLING.
6. TOPS OF EXISTING MANHOLES, DRAINAGE INLETS, HYDRANTS AND WATER LINE VALVE BOXES SHALL BE RAISED AS NECESSARY TO BE FLUSH WITH PROPOSED PAVEMENT ELEVATIONS.
7. DRAWINGS DO NOT PURPORT TO SHOW ALL EXISTING UTILITIES.
8. EXISTING UTILITIES SHALL BE VERIFIED IN FIELD PRIOR TO INSTALLATION OF ANY NEW LINES.
9. THE CONTRACTOR IS SPECIFICALLY CAUTIONED THAT THE LOCATION AND/OR ELEVATION OF EXISTING UTILITIES AS SHOWN ON THESE PLANS IS BASED ON RECORDS OF THE VARIOUS UTILITY COMPANIES AND/OR MEASUREMENTS TAKEN IN THE FIELD. THE INFORMATION IS NOT TO BE RELIED ON AS BEING EXACT OR COMPLETE. SEE PROJECT MANUAL REGARDING COORDINATION WITH UTILITY COMPANIES BEFORE ANY EXCAVATION TO REQUEST EXACT FIELD LOCATION OF UTILITIES.
10. THE CONTRACTOR SHALL CONDUCT REQUIRED TESTS TO THE SATISFACTION OF THE RESPECTIVE UTILITY COMPANIES AND THE OWNER'S INSPECTING AUTHORITIES.
11. CONTRACTOR SHALL COMPLY TO THE FULLEST EXTENT WITH THE LATEST STANDARDS OF OSHA DIRECTIVES OR ANY OTHER AGENCY HAVING JURISDICTION FOR EXCAVATION AND TRENCHING PROCEDURES. THE CONTRACTOR SHALL USE SUPPORT SYSTEMS, SLOPING, BENCHING, AND OTHER MEANS OF PROTECTION. THIS TO INCLUDE BUT IS NOT LIMITED TO ACCESS AND EGRESS FROM ALL EXCAVATION AND TRENCHING. CONTRACTOR IS RESPONSIBLE TO COMPLY WITH PERFORMANCE CRITERIA FOR OSHA.
12. THE CONTRACTOR SHALL BE RESPONSIBLE FOR ALL DEWATERING, PUMPING AND TREATMENT OF WATER. NO WATER FROM ANY CONSTRUCTION WORK, PROCESS OR AREA SHALL BE RELEASED DOWN STREAM OR INTO STORM SYSTEMS WITH OUT FIRST BEING TREATED TO REMOVE SEDIMENT, OILS, OR OTHER POLLUTANTS.

Site Utility Keynotes

1 PROVIDE DOWNSPOUT SHOE. INVERT = 406.50. COORDINATE WITH DOWNSPOUT INSTALLER SEE DETAIL 15 / AC500.

2 PROVIDE 26 LF OF 6-INCH HDPE STORM PIPE (DP-1) AT 2.50% SLOPE. SEE DETAILS 14 / AC500.

3 PROVIDE 45 DEG ELBOW. INVERT = 405.85.

4 PROVIDE 69 LF OF 6-INCH HDPE STORM PIPE (DP-2) AT 0.75% SLOPE. SEE DETAILS 14 / AC500.

5 PROVIDE DOWNSPOUT SHOE. INVERT = 405.92. COORDINATE WITH DOWNSPOUT INSTALLER SEE DETAIL 15 / AC500.

6 PROVIDE 14 LF OF 6-INCH HDPE STORM PIPE (DP-3) AT 3.69% SLOPE. SEE DETAILS 14 / AC500.

7 PROVIDE 45 DEG ELBOW. INVERT = 405.40.

8 PROVIDE 2 LF OF 6-INCH HDPE STORM PIPE (DP-4) AT 3.69% SLOPE. SEE DETAILS 14 / AC500.

9 PROVIDE 6X6 WYE. INVERT = 405.33.

10 PROVIDE 86 LF OF 6-INCH HDPE STORM PIPE (DP-5) AT 0.75% SLOPE. SEE DETAILS 14 / AC500.

11 PROVIDE 30 DEG ELBOW. INVERT = 404.68.

12 PROVIDE 12 LF OF 6-INCH HDPE STORM PIPE (DP-6) AT 0.75% SLOPE. SEE DETAILS 14 / AC500.

13 EXISTING CATCH BASIN.
TOP OF GRATE = 407.30.
NEW 6-INCH INVERT IN (NW) = 404.58.
NEW 6-INCH INVERT IN (NE) = 404.43
ESTIMATED EXISTING. 12-INCH INVERT OUT (SE) = 404.30.

14 PROVIDE CATCH BASIN. SEE DETAIL 18 / AC500.
TOP OF GRATE = 407.42.
6-INCH INVERT IN (SE) = 404.75.

15 PROVIDE 24 LF OF 6-INCH HDPE STORM PIPE (DP-6) AT 0.75% SLOPE. SEE DETAILS 14 / AC500.

16 PROVIDE 30 DEG ELBOW. INVERT = 404.58.

17 PROVIDE 20 LF OF 6-INCH HDPE STORM PIPE (DP-6) AT 0.75% SLOPE. SEE DETAILS 14 / AC500.

18 PROVIDE GRADE RINGS TO RAISE GRATE TO 409.75.

19 PROVIDE DOWNSPOUT TO DRAIN INTO CATCH BASIN.

20 PROVIDE DOWNSPOUT INTO STONE BED.

GRADING KEY	
TC	TOP OF CURB
BC	BOTTOM OF CURB
TW	TOP OF WALL
BW	BOTTOM / BACK OF WALL
+	SPOT ELEVATION
MATCH	MATCH EXISTING GRADE

General Site Notes

1. REFER TO DRAWING AC100 FOR GENERAL SITE NOTES THAT APPLY TO ALL C-SERIES DRAWINGS.

General Grading Plan Notes

1. ALL FILL MATERIALS, INCLUDING ON-SITE MATERIALS, ARE TO BE SUBMITTED FOR ARCHITECT APPROVAL BEFORE PLACEMENT. REFER TO EARTH MOVING SPECIFICATION FOR REQUIREMENTS.
2. ALL CUT OR FILL SLOPES SHALL BE 3:1 OR FLATTER UNLESS OTHERWISE NOTED.
3. EXCESS MATERIAL CUT FROM THE SITE (WITH THE EXCEPTION OF TOPSOIL) SHALL BE REMOVED FROM THE SITE AND LEGALLY DISPOSED OF PER THE PROJECT MANUAL.
4. OWNER'S GEOTECHNICAL ENGINEER TO BE PRESENT FOR ALL FILL AND COMPACTION OPERATIONS, INCLUDING TRENCHES AND STORMWATER STRUCTURES. REFER TO EARTH MOVING SPECIFICATION FOR GEOTECHNICAL TESTING REQUIREMENTS.
5. CONTRACTOR SHALL ASSURE POSITIVE DRAINAGE AWAY FROM BUILDINGS AND STRUCTURES FOR NATURAL AND PAVED AREAS.
6. SPREAD TOPSOIL TO A MINIMUM DEPTH OF 6-INCHES CONTINUOUS SETTLED DEPTH OVER AREAS OF THE SITE WHERE EARTH HAS BEEN DISTURBED, EXCEPT WHERE BUILDING OR PAVING IS PROPOSED.
7. DISTURBED AREAS THAT ARE NOT RECEIVING PAVEMENT SHALL BE FINE GRADED, SEEDED, FERTILIZED AND MULCHED AS PER THE PROJECT MANUAL.
8. AFTER FINE GRADING IS COMPLETED, INFORM THE OWNER AND A/E SO THAT AN INSPECTION OF THE FINE GRADING CAN TAKE PLACE BEFORE SEEDING IS BEGUN. IF INSPECTION DOES NOT TAKE PLACE, APPROVAL OF LAWN MAY BE DELAYED OR DENIED.
9. PROVIDE GRADE ADJUSTING RINGS OR SHIMS AT DROP-INLETS, CATCH BASINS AND MANHOLES IN AREAS SCHEDULED FOR REPAVING OR REGRADING TO BRING RIMS UP TO LEVEL OF NEW FINISHED GRADE.
10. EXISTING AND PROPOSED GRADE CONTOUR INTERVALS SHOWN AT 1-FOOT INTERVALS.
11. ALL STORM SEWER MANHOLES IN PAVED AREAS SHALL BE FLUSH WITH PAVEMENT, AND SHALL HAVE TRAFFIC BEARING LIDS.
12. IF APPLICABLE, THE CONTRACTOR SHALL ADHERE TO ALL TERMS & CONDITIONS AS OUTLINED IN THE GENERAL NEW YORK STATE S.P.D.E.S. PERMIT AND PROJECT S.W.P.P.P. FOR STORMWATER DISCHARGE ASSOCIATED WITH CONSTRUCTION ACTIVITIES.
13. CONTRACTOR SHALL ADJUST AND / OR CUT EXISTING PAVEMENT AS NECESSARY TO ASSURE A SMOOTH FIT AND CONTINUOUS GRADE.
14. CONSTRUCTION SHALL COMPLY WITH ALL APPLICABLE GOVERNING CODES AND BE CONSTRUCTED TO SAME.

ADA Site Notes

1. THE MAXIMUM SLOPE OF ACCESSIBLE PARKING STALLS AND ASSOCIATED ACCESS AISLE SHALL BE 2% (1V:50H).
2. THE MAXIMUM SLOPE IN THE DIRECTION OF TRAVEL ON ACCESSIBLE PATHS SHALL BE 5% (1V:20H).
3. THE MAXIMUM CROSS SLOPE ON ACCESSIBLE PATHS SHALL BE 2% (1V:50H).
4. THE MAXIMUM SLOPE IN THE DIRECTION OF TRAVEL ON ACCESSIBLE RAMPS AND CURB RAMPS SHALL BE 8.33% (1V:12H), AS INDICATED ON THE DETAILS.
5. GROUND SURFACES ON ACCESSIBLE PATHS SHALL BE STABLE, FIRM, AND SLIP RESISTANT.

Rev. No.:	Date:	Description:

TOMPKINS COUNTY

complex world | CLEAR SOLUTIONS

Tetra Tech Engineers, Architects & Landscape Architects, P.C.

STATE OF NEW YORK · KEVIN CHARLES TEMPLE · 079083 · LICENSED PROFESSIONAL ENGINEER

Reg. Expires: 10/31/2027

TETRA TECH
ARCHITECTS & ENGINEERS

Tompkins County
Ithaca, NY

Alterations to:
Tompkins County: Public Library
Exterior Upgrades

Site Utility and Grading Plan

Drawn by: LGB
Date: June 8, 2026
Project No.: 123174-23001.10
Drawing No.: AC130

It is a violation of the Education Law of the State of New York for any person to alter or modify this document in any way unless acting under the direction of a licensed architect.

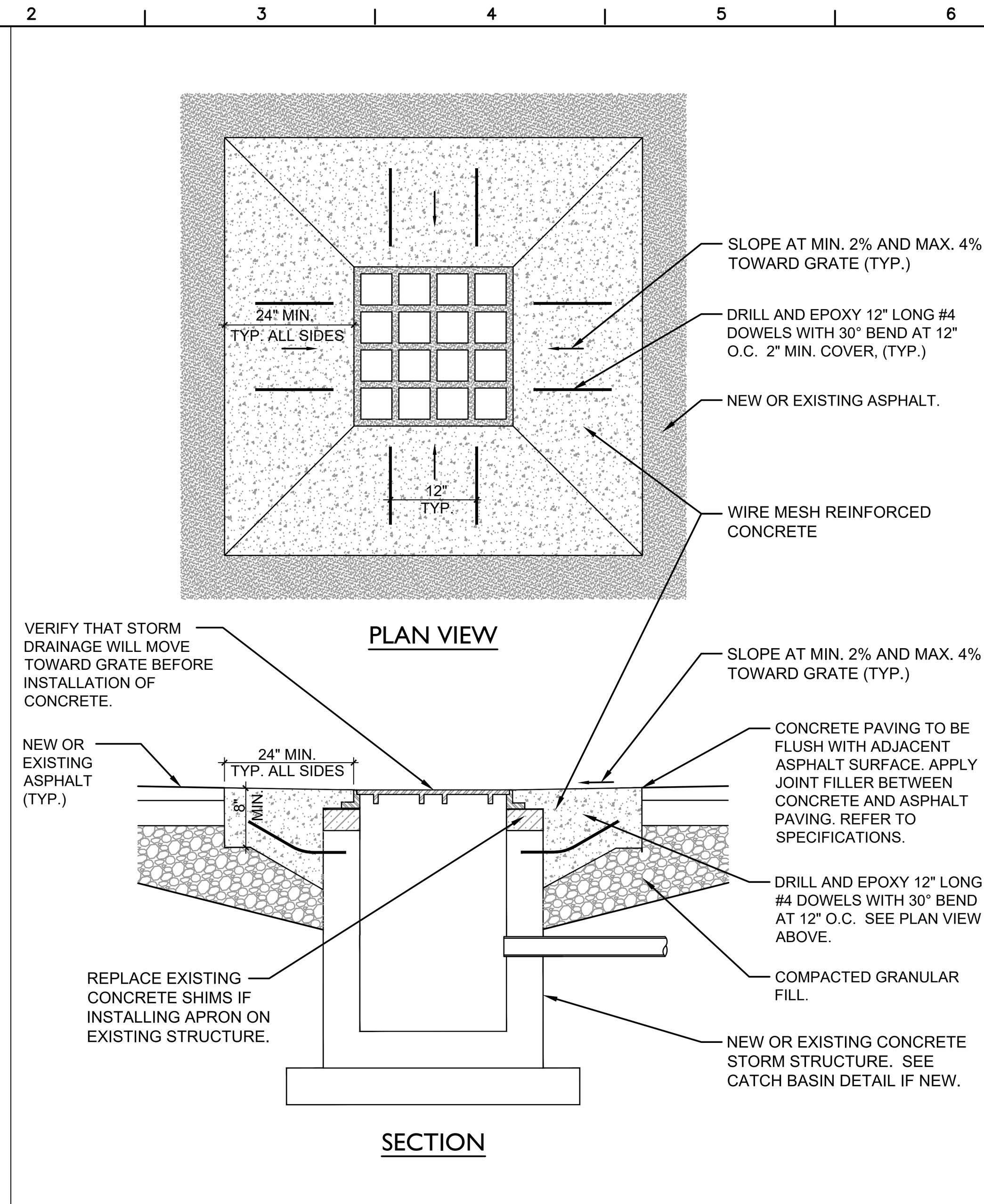

17 CATCH BASIN WITH CONCRETE APRON

NTS

2018-10-25

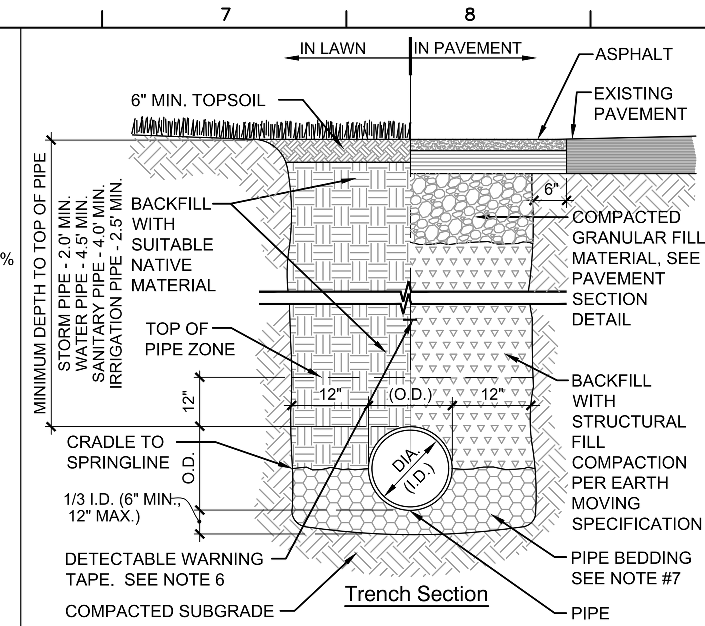

NOTES:
1. INSTALL PIPE IN ACCORDANCE WITH MANUFACTURER'S RECOMMENDATIONS.
2. INCLUDE SHORING AND DEWATERING IN TRENCHING OPERATIONS.
3. TRENCH DETAILS ARE ONLY SHOWN FOR PURPOSES OF MATERIAL PLACEMENT AND MAXIMUM PAY LIMITS. THICKNESSES INDICATED ARE MINIMUMS. WHERE EXISTING CONDITIONS EXCEED THOSE SHOWN, MATCH EXISTING.
4. USE MOVABLE PROTECTIVE TRENCH SHIELDS IN UNSHEETED TRENCH AREAS AS REQUIRED BY OSHA REGULATIONS.
5. MINIMUM BURY DEPTHS SHOWN ABOVE APPLY UNLESS OTHERWISE INDICATED.
6. PROVIDE DETECTABLE WARNING TAPE AS SPECIFIED.
7. PIPE BEDDING SHALL BE:
STORM - USE STRUCTURAL FILL OR APPROVED FILL MATERIAL IN PIPE ZONE.
SANITARY - USE CRUSHED STONE UTILITY BEDDING IN PIPE CRADLE. USE MATERIAL EXCAVATED FROM TRENCH WITH 3" AND LARGER STONE REMOVED IN REMAINING PIPE ZONE.
WATER - USE CRUSHED STONE IN PIPE CRADLE. USE MATERIAL EXCAVATED FROM TRENCH WITH 3" AND LARGER STONE REMOVED IN REMAINING PIPE ZONE.
IRRIGATION - USE SAND IN PIPE CRADLE. USE MATERIAL EXCAVATED FROM TRENCH WITH 3" AND LARGER STONE REMOVED IN REMAINING PIPE ZONE.
GAS - USE CRUSHED STONE OR SAND UTILITY BEDDING IN PIPE ZONE.
FORCE MAIN - USE SAND OR STRUCTURAL FILL IN PIPE ZONE.

14 Pipe Trench

NTS

2020-03-03_DFL

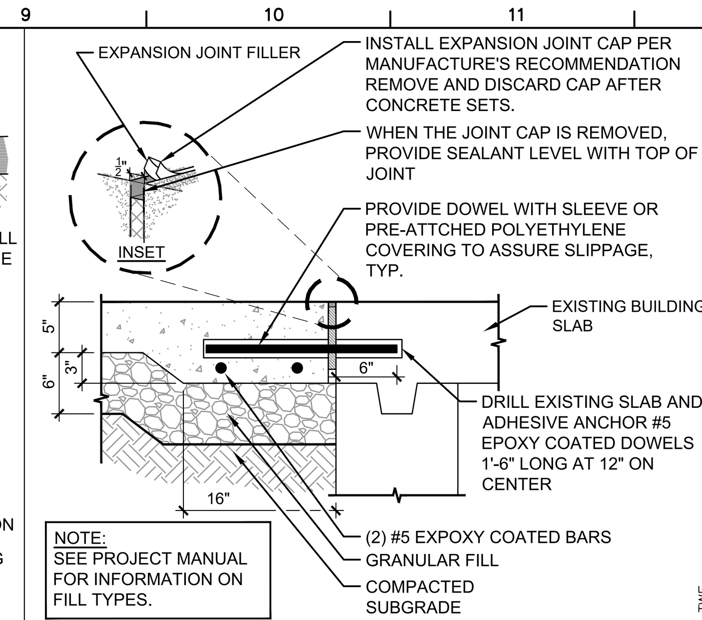

10 Expansion Joint at Existing Slab

NTS

05.07.2018-TWF

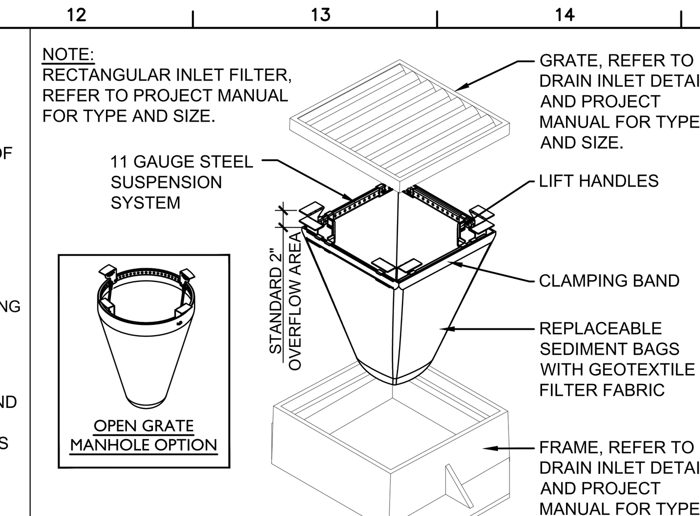

INSTALLATION:
1. REMOVE GRATE
2. DROP INLET FILTER ONTO LOAD BEARING LIP OF CASTING OR CONCRETE STRUCTURE
3. REPLACE GRATE

6 Drop Inlet Protection - Drop In Filter

NTS

05.11.12 – DFL

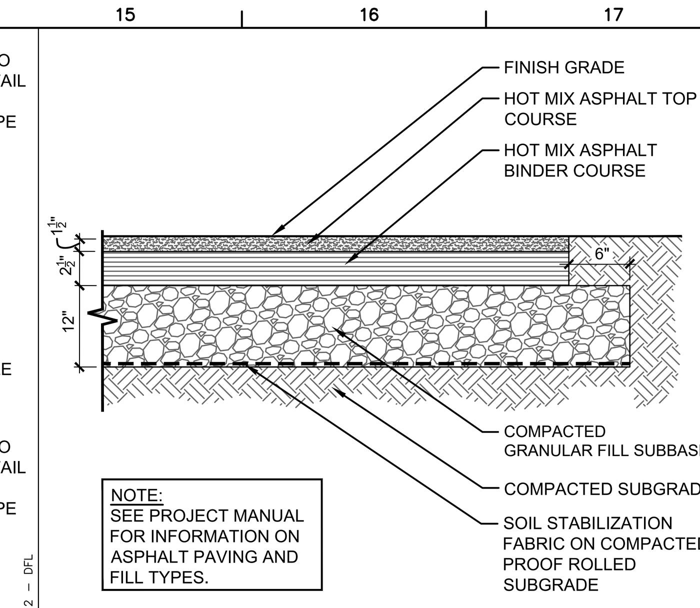

1 Asphalt Paving - Auto Duty

NTS SECTION

03.2019 – JMR

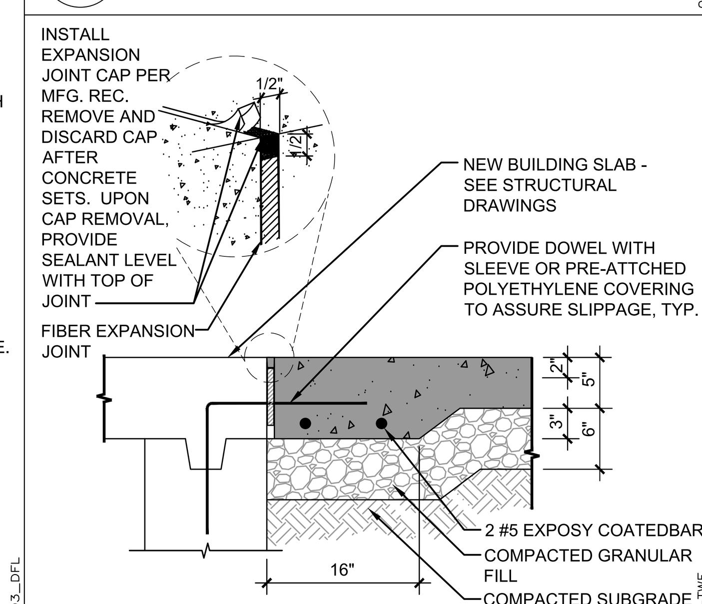

11 Expansion Joint at New Slab

NTS

05.07.2018-TWF

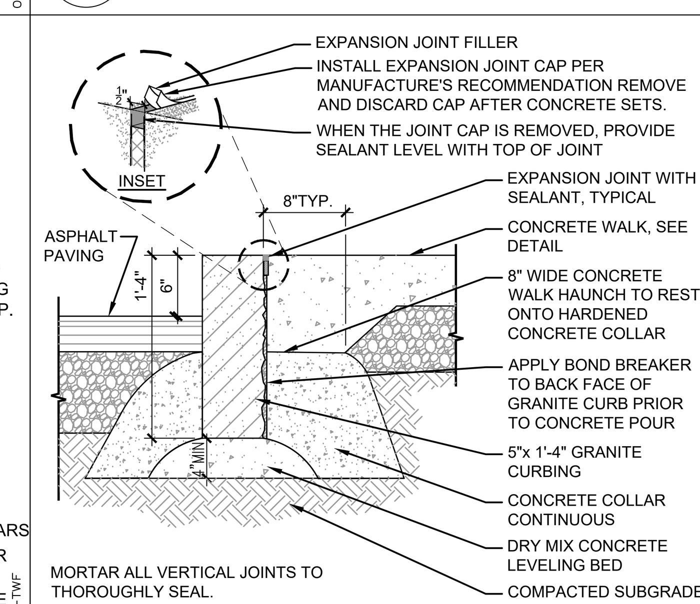

7 Granite Curb at Walk

NTS

02.2010 – JPF1

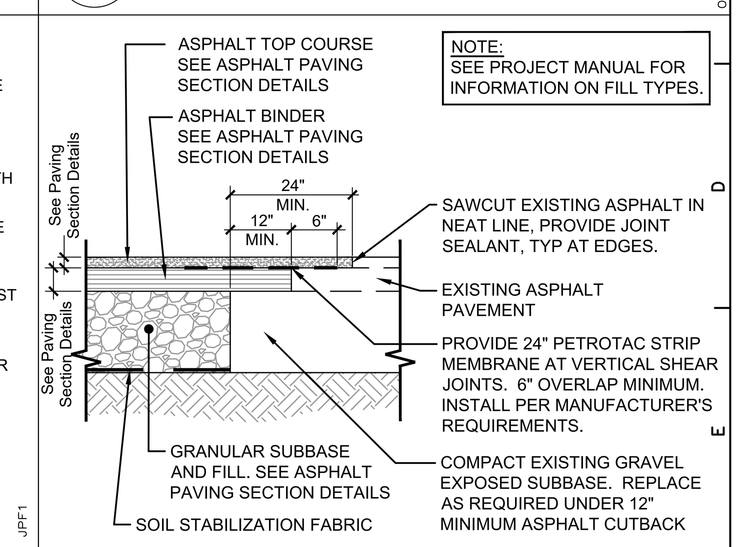

2 Asphalt Paving at Existing Asphalt

NTS SECTION

07.2016 – DGB

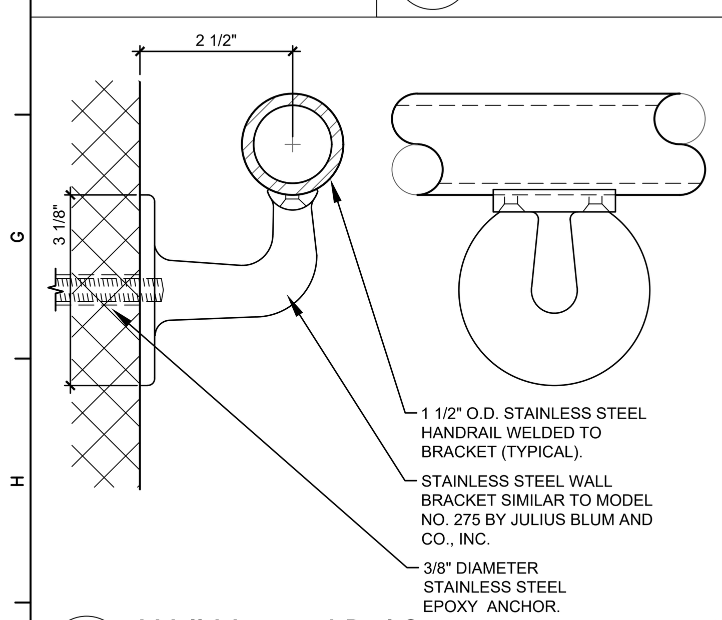

21 Wall Mounted Rail Support

N.T.S.

055100-44

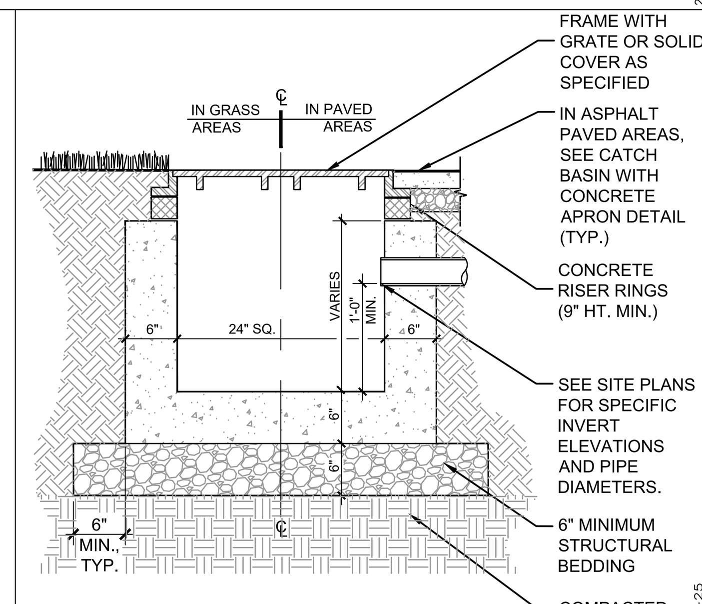

18 Catch Basin - 24" X 24"

NTS

2018-10-25

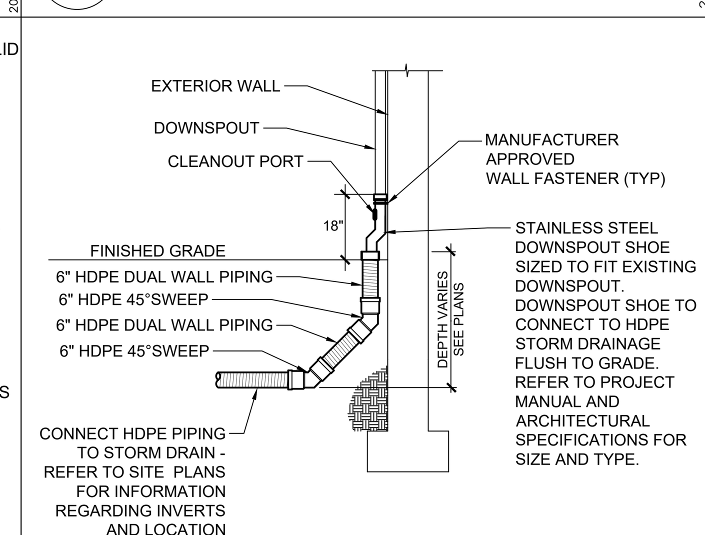

15 Downspout Shoe Connection

N.T.S.

10-2015_DGB

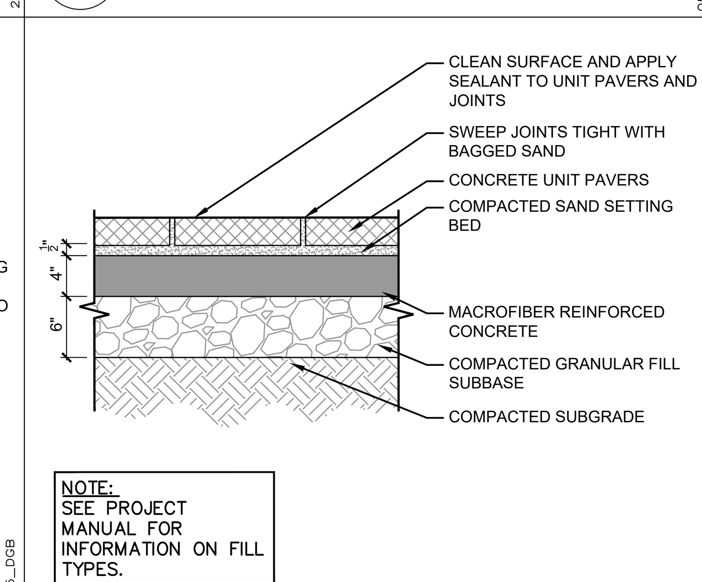

12 Unit Pavers on Concrete

N.T.S. SECTION

02.2010 – JPF1

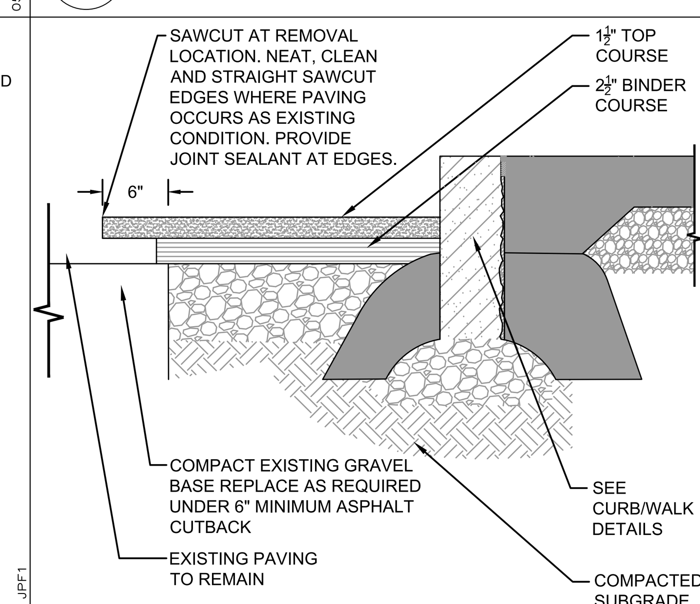

8 Asphalt Paving - Patch at New Curb

N.T.S. SECTION

07.2010– DFL

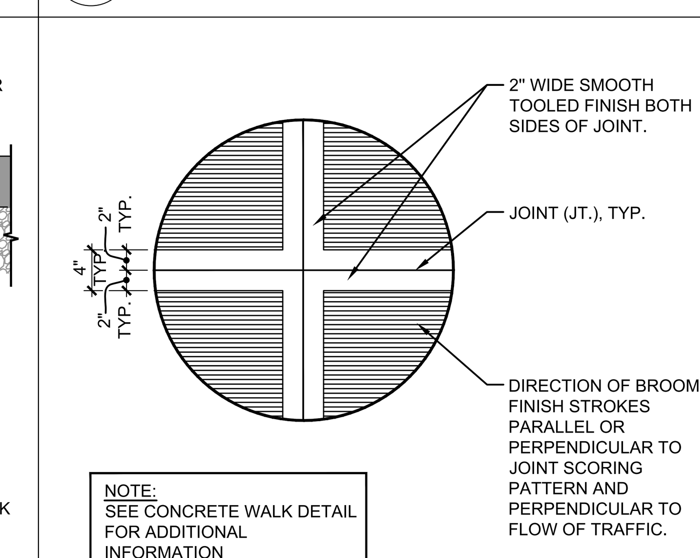

3 Concrete Finish

NTS

10.2008 - DFL

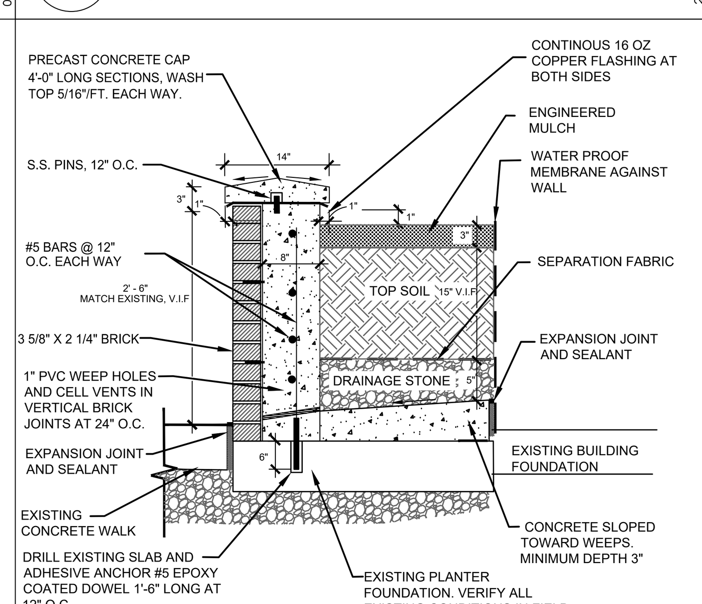

19 Concrete Planter - Brick and Precast Cap

NTS

2830-202

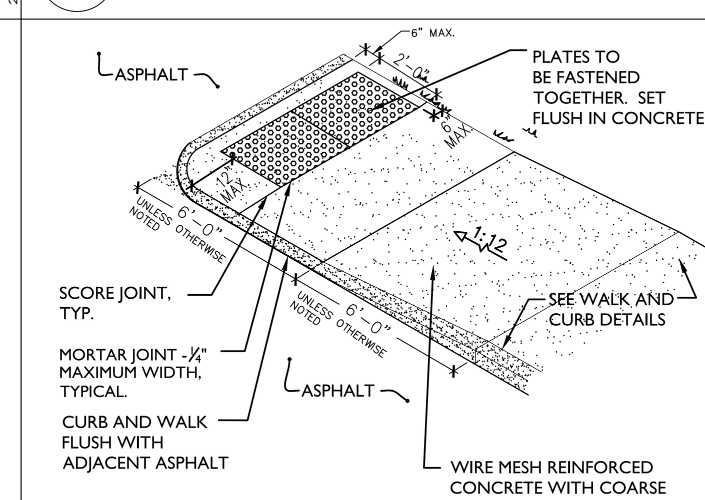

PLATE INSTALLATION NOTES:
1. REMOVE ALL EXCESS CONCRETE FROM PLATES.
2. SEAL JOINTS OVER ⅛" WITH JOINT SEALANT.

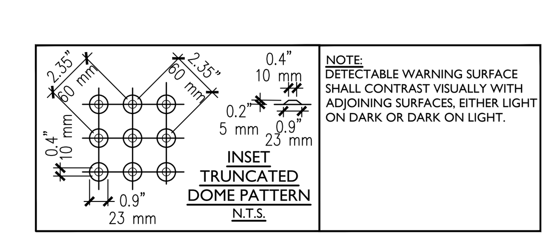

16 Drop Curb at Walk End

N.T.S.

04.2013 – PLP

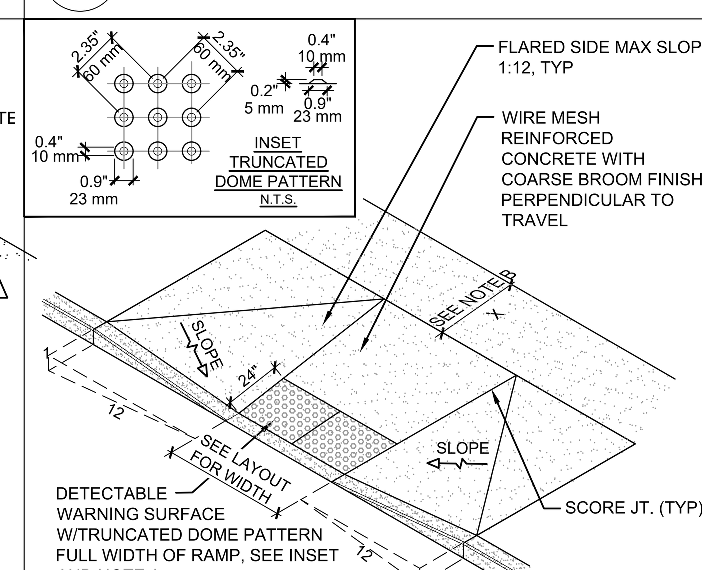

NOTE A:
DETECTABLE WARNING SURFACE SHALL CONTRAST VISUALLY WITH ADJOINING SURFACES, EITHER LIGHT ON DARK OR DARK ON LIGHT

NOTE B:
IF "X" IS LESS THAN 48" THE SLOPE OF THE FLARED SIDES SHALL NOT EXCEED 1:12.

NOTE C:
REFER TO CURB CUT SECTION DETAILS.

DETECTABLE WARNING SURFACE NOTES:
1. INSTALL PER MFG. INSTALLATION INSTRUCTIONS.
2. REMOVE ALL EXCESS CONCRETE FROM PLATES.
3. SEAL JOINTS OVER ⅛" WITH JOINT SEALANT.

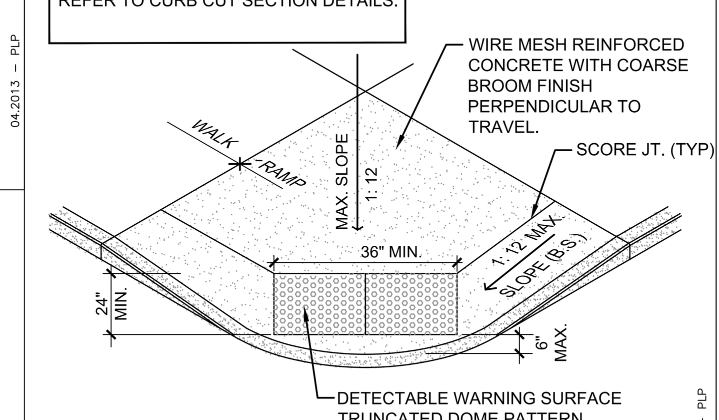

13 Accessible Curb Ramp

NTS

11.2009 – PLP

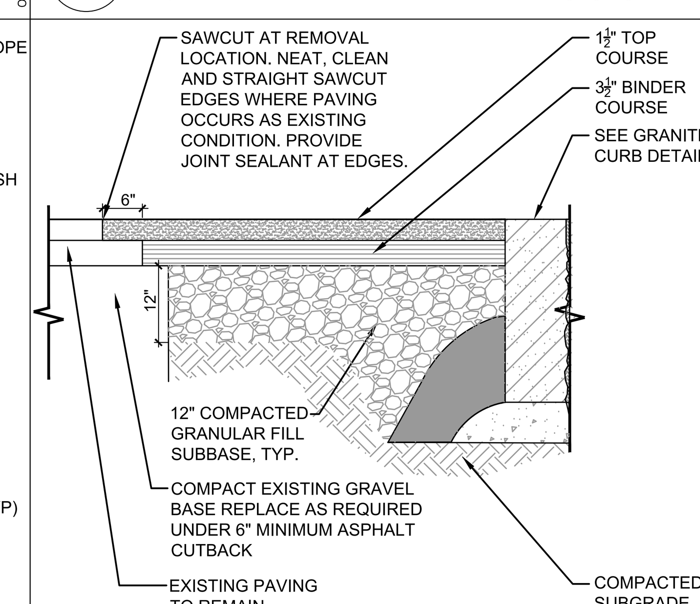

9 Asphalt Paving - Patch at New Flush Curb

NTS SECTION

07.2010– DFL

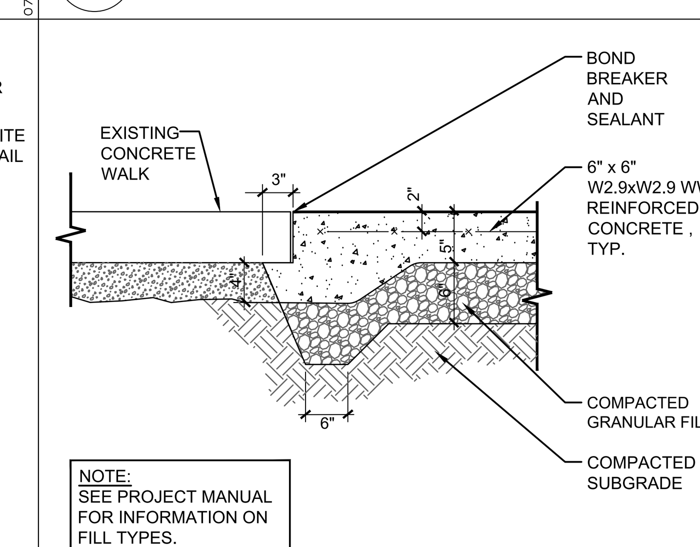

4 New Concrete Walk at Existing Walk

NTS

20190712 – WH

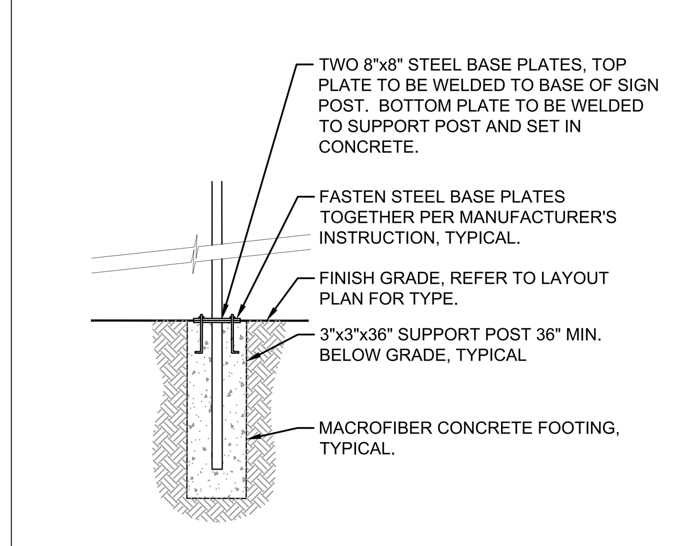

20 Sign Post and Panel Base Plate Footing

NTS

08-2011 – DFL

NOTES:
1. SEE CONCRETE WALK FINISH DETAIL FOR MORE INFORMATION.
2. SEE SCORE PATTERN ON LAYOUT PLAN.
3. CONTROL AND TOOL JOINTS ARE TO BE TOOLED.
4. TYPICAL MIN. JOINT SPACING (UNLESS OTHERWISE NOTED):
TOOL JTS. - 5'
CONTROL JTS. - 10'
EXPANSION JTS. - 30'
5. PROVIDE POSITIVE DRAINAGE AWAY FROM BUILDING.

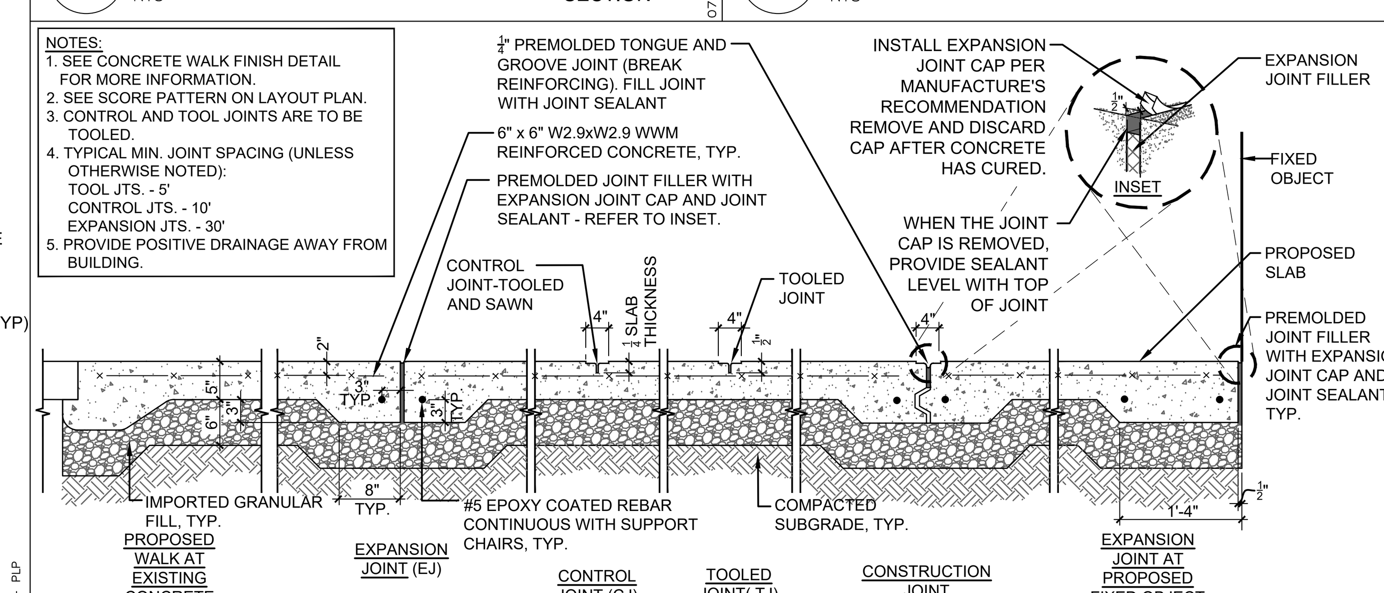

5 Concrete Walk

NTS

20190711-WH

Rev. No.:	Date:	Description:

complex world CLEAR SOLUTIONS

Tetra Tech Engineers, Architects & Landscape Architects, P.C.

KEVIN CHARLES TERRY — STATE OF NEW YORK — LICENSED PROFESSIONAL ENGINEER — 079083

Reg. Expires: 10/31/2027

TETRA TECH
ARCHITECTS & ENGINEERS

Tompkins County
Ithaca, NY

Alterations to:
Tompkins County: Public Library
Exterior Upgrades

Site Details

Drawn by:	Date:	Drawing No.:
LGB	June 8, 2026	AC500
Project No.: 123174-23001.10		

It is a violation of the Education Law of the State of New York for any person to alter or modify this document in any way unless acting under the direction of a licensed architect.

1 First Floor - Key Plan
3/32" = 1'-0"

General Notes

A. DO NOT SCALE DRAWINGS TO OBTAIN DIMENSIONS.

B. TAKE FIELD MEASUREMENTS TO FIT THE WORK PROPERLY. VERIFY ALL EXISTING CONDITIONS AND DIMENSIONS IN THE FIELD.

C. REFER INCONSISTENCIES TO ARCHITECT PRIOR TO COMMENCING THE WORK IN AFFECTED AREA.

D. ITEMS ARE SHOWN DIAGRAMMATICALLY ON DRAWINGS. VERIFY SPACE REQUIREMENTS AND DIMENSIONS TO FIT THE WORK PROPERLY.

E. NOTES SHOWN ON ONE DRAWING APPLY TO ALL SIMILAR DRAWINGS.

F. DO NOT DISTURB CONSTRUCTION SUSPECTED OF CONTAINING HAZARDOUS MATERIAL. IF ENCOUNTERED, IMMEDIATELY NOTIFY ARCHITECT AND OWNER.

Plan Key Notes

1. REMOVE ALL EXISTING SOLAR SYSTEM COMPONENTS AT BUILDING INTERIOR INCLUDING: ALL EQUIPMENT IN INVERTER ROOM 134 AND AT EXTERIOR (EXCLUDING ROOF) INCLUDING: ELECTRICAL PANELS, INVERTERS, EQUIPMENT, WIRING, CONDUITS AND PATCH ALL WALL PENETRATIONS AND HOLES TO MATCH EXISTING. **WORK BY ALTERNATE 2**.
2. DISCONNECT AND REMOVE EXISTING SURFACE MOUNTED LIGHT FIXTURES, PROTECT, STORE, RECONNECT, AND REINSTALL WITH NEW SUPPORT BACK BOXES AFTER COMPLETION OF EXTERIOR CEILING SYSTEM.
3. REMOVE EXISTING PLASTER LATH AND SUPPORT CEILING SYSTEM COMPLETELY INCLUDING VERTICAL RETURNS TO ROOF FASCIA AT NORTH AND SOUTH SIDES. PROVIDE DEFS ON CEMENTITIOUS BACKER BOARD ON CFMF FRAMING EXTERIOR CEILING SYSTEM INCLUDING VERTICAL RETURNS TO ROOF FASCIA AT NORTH AND SOUTH SIDES. SEE DETAIL 11 / AA191.
4. PATCH (MINOR EXTENT), PREPARE, PRIME AND PAINT EXISTING MAIN ENTRANCE EXTERIOR CEILING SYSTEM (BRIGHT WHITE).
5. PATCH, PRIME AND PAINT EXISTING CMU WALL FACING UNDERSIDE OF LOADING CANOPY.
6. PATCH, CLEAN, PREPARE AND RE-COAT ALL EXISTING EIFS SURFACES (TYPICAL). SEE ELEVATION KEY NOTE 1.
7. THOROUGHLY CLEAN POWER WASH/CHEMICAL SCRUB AND SCRAPE SURFACE GRIME/GUM/ETC. FROM ALL CONCRETE PAVING BELOW EXISTING EXTERIOR CEILING SYSTEMS. REMOVE LOOSE SEALANT AND RE-SEAL JOINTS AND PERIMETERS.
8. EXISTING POST MOUNTED AWNING/CANOPY SEE ELEVATIONS KEY NOTE 25.
9. EXISTING METAL PANEL SOFFIT. SEE ELEVATIONS KEY NOTE 28.
10. EXISTING WALL CAP. SEE ELEVATION KEY NOTE 15.
11. EXISTING STATUE. OWNER TO REMOVE, STORE, PROTECT AND REINSTALL. PREPARE PRIME AND PAINT STEEL BASE WITH HIGH PERFORMANCE COATING.
12. EXISTING MASONRY PLANTER. SEE SITE DRAWINGS.
13. EXISTING VINES/PLANTS GROWTH IN-GROUND AND ON-BUILDING. SEE ELEVATIONS KEY NOTE 27 AND SITE DRAWINGS.
14. ALUMINUM GLAZED STOREFRONT WINDSCREEN SYSTEM. SEE ELEVATION KEY NOTE 26.
15. ALUMINUM DOWNSPOUT. SEE ROOF KEY NOTE 5.
16. ALUMINUM DOWNSPOUT. SEE ROOF KEY NOTE 7.
17. EXISTING RAMP AND HANDRAILS. SEE SITE DRAWINGS.
18. EXISTING CANTILEVER STEEL CANOPY. SEE ELEVATION KEY NOTE 8.
19. EXISTING STEEL DOOR AND FRAME, SEE ELEVATION KEY NOTE 5.
20. EXISTING STEEL DOOR FRAME TRIM. SEE ELEVATION KEY NOTE 6.

Structural Key Notes

S1. CLEAN STEEL OF DUST, DIRT, RUST, AND ALL EXISTING PAINT AND PRIMERS, DOWN TO SOUND STEEL. ONCE CLEANED, CONTACT THE ARCHITECT TO PERFORM ADDITIONAL MEASUREMENTS OF COLUMN WEB AND FLANGE THICKNESSES TO ENSURE THAT THE REDUCTION OF THICKNESS HAS NOT AFFECTED THE STEEL CAPACITY. PRIME AND PAINT WITH HIGH PERFORMANCE COATING FOR EXTERIOR EXPOSED STRUCTURAL STEEL.

S2. CHIP AWAY THE TOP OF THE CONCRETE BASE TO ABOUT 10 INCHES BELOW THE TOP SURFACE, TAKING CARE TO CHIP AROUND ANY REINFORCING. CLEAN PORTION OF STEEL THAT WAS ENCASED IN THE CONCRETE. ONCE CLEANED, CONTACT ARCHITECT FOR ADDITIONAL INSPECTION OF THE STEEL. PRIME AND PA9@/AA191 HIGH PERFORMANCE COATING. REFER TO DETAIL

S3. REMOVE CANOPY POSTS, BASE PLATES, ANCHORS AND PORTION OF FOOTING AS REQUIRED TO REGRADE

S4. DETACH CANOPY POST TO REMAIN FROM EXISTING FOOTING PRIOR TO SITE WORK. SHORE POSTS AND CANOPY STRUCTURE AS REQUIRED. REATTACH POST TO EXISTING FOOTINGS (THROUGH NEW SIDEWALK) WITH STAINLESS STEEL ANCHORS. SHIM AS REQUIRED. COORDINATE WITH SITE DRAWINGS FOR SLOPE OF NEW SIDEWALK.

S5. CLEAN CANOPY POSTS TO REMAIN. PRIME AND PAINT WITH HIGH PERFORMANCE COATING.

S6. SAWCUT AND REMOVE EXISTING CONCRETE SLAB BELOW LOADING CANOPY ROOF. REPLACE WITH 8 INCH TI8/AA191 STRUCTURAL SLAB ON GRADE. REFER TO DETAIL FOR ADDITIONAL INFORMATION. COORDINATE WITH SITE DRAWINGS FOR ELEVATIONS AND ADJACENT WORK.

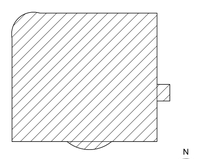

Key Plan
N.T.S.

Rev. No.:	Date:	Description:

complex world | CLEAR SOLUTIONS

Tetra Tech Engineers, Architects & Landscape Architects, P.C.

Reg. Expires: 10/31/2027

TETRA TECH
ARCHITECTS & ENGINEERS

Tompkins County
Ithaca, NY

Alterations to:
Tompkins County: Public Library
Exterior Upgrades Project

First Floor Key Plan

Drawn By:	Date:	Drawing Number:
TLG	June 8, 2026	AA051
Project No.: 123174-23001.10		

It is a violation of the Education Law of the State of New York for any person to alter or modify this document in any way unless acting under the direction of a licensed architect.

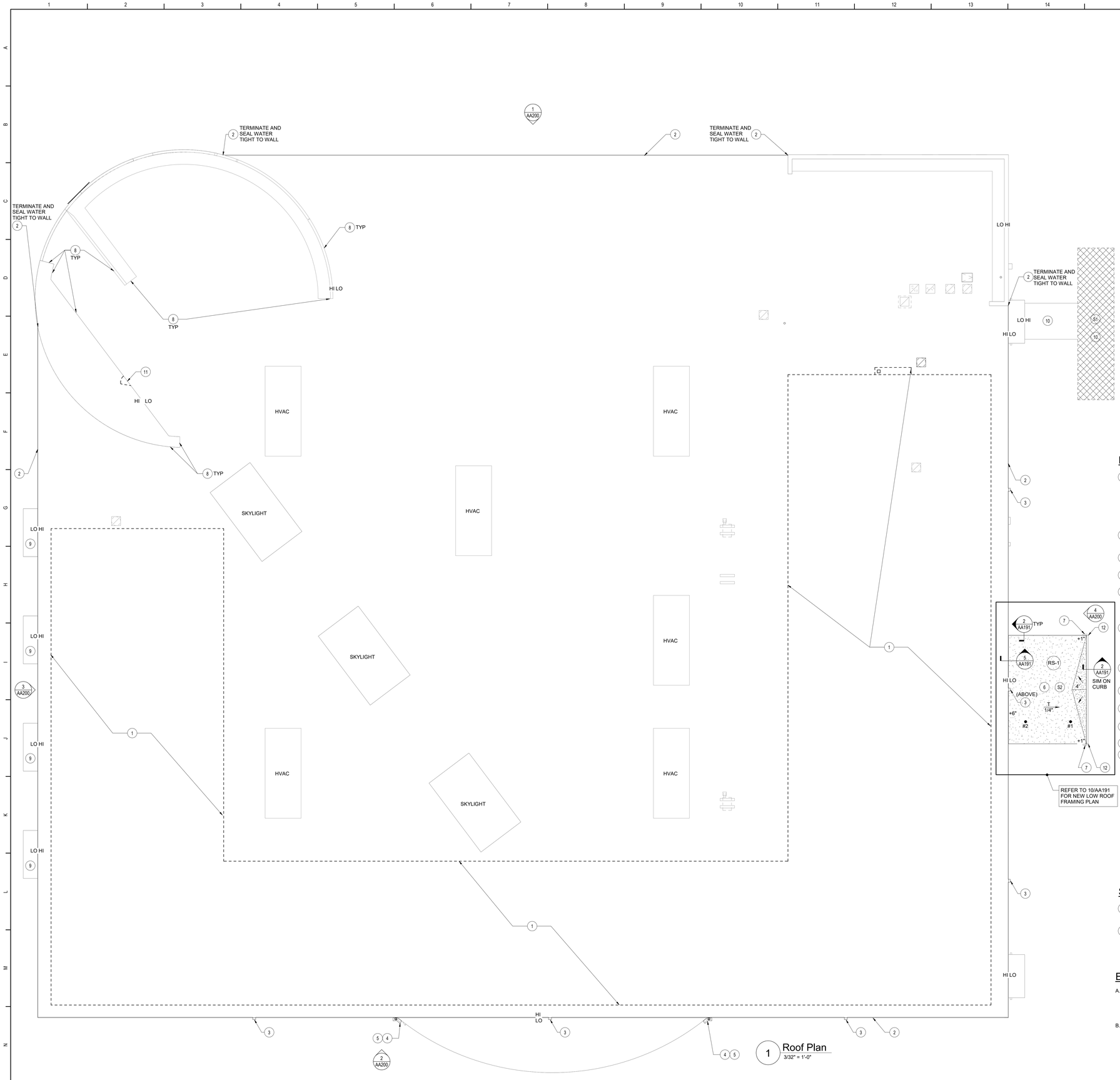

1 Roof Plan
3/32" = 1'-0"

General Re-Roofing Notes

A. DRAWINGS ARE REPRESENTATIVE, AND MAY NOT EXACTLY INDICATE ALL FIELD CONDITIONS.

B. VERIFY IN FIELD LOCATIONS OF ALL EXISTING ROOF DRAINS AND PENETRATIONS PRIOR TO FIRST SUBMITTAL OF SHOP DRAWINGS.

C. INSPECT ROOF STRUCTURE PRIOR TO ROOFING INSTALLATION. VERIFY THAT EXISTING MATERIALS ARE SOLID AND SECURE. NOTIFY ARCHITECT IMMEDIATELY IF DETERIORATED OR LOOSE MATERIALS ARE DISCOVERED.

D. PROVIDE COMPLETE ROOFING INSTALLATION. REPAIR ALL ITEMS NOT SCHEDULED FOR WORK THAT ARE DAMAGED DURING ROOFING WORK.

E. MAINTAIN WATERTIGHT CONDITIONS AT ALL TIMES.

F. PROVIDE ROOFING SYSTEMS AND ALL RELATED COMPONENTS INDICATED BY THE CONTRACT DOCUMENTS.

G. WORK INCLUDES BUT IS NOT LIMITED TO REMOVAL OF ROOFING MATERIALS, INCLUDING MEMBRANE, INSULATION, BLOCKING, CANTS, FLASHING, FASCIA, UNDER- AND OVERLAYMENT BOARDS, VAPOR BARRIERS AND RELATED ITEMS INCLUDING ROOF DECK (UNO). REFER TO ABATEMENT PLAN.

H. REMOVE AND LEGALLY DISPOSE OF ALL MATERIALS INDICATED FOR DEMOLITION.

I. WOOD BLOCKING SHALL BE PRESERVATIVE-TREATED (PTP).

J. DO NOT DISTURB OR OVERBURDEN EXISTING ROOF AREAS THAT ARE NOT SCHEDULED FOR WORK. THIS INCLUDES HIGH FOOT TRAFFIC, POINTS OF ACCESS AND WORK PREPARATION AREAS. ALL WORK REQUIRED SHALL COMPLY WITH EXISTING ROOF SYSTEM MANUFACTURER'S WARRANTY REQUIREMENTS.

K. MAINTAIN CONSTANT ROOF EDGE DATUM AND FASCIA HEIGHTS. BY ADJUSTING LAYERS AND THICKNESS OF CONTINUOUS WOOD BLOCKING (VIF).

Roof Key Notes

1. REMOVE ALL EXISTING SOLAR SYSTEM COMPONENTS ON THE ROOF INCLUDING: PANELS, CMU PAVERS, SUPPORT BASES, PERIMETER CURBS AND ASSOCIATED ITEMS FROM ROOF AND THOROUGHLY CLEAN ROOF SURFACE AND DRAINS OF ALL LOOSE GRANULES, PLANT AND COMPOST DEBRIS. TERMINATE ELECTRICAL CONNECTIONS THROUGH ROOF AND CAP WATERTIGHT. PERFORM REMOVALS OF ITEMS ON THE ROOF SURFACE CAREFULLY TO AVOID DAMAGE TO THE EXISTING ROOF SYSTEM. **WORK BY ALTERNATE 2.**
2. PROVIDE RAISED CANTED ROOF EDGE FASCIA SURFACE-APPLIED OVER EXISTING FASCIA AND ROOF SYSTEM, FLASH INTO EXISTING ROOF MEMBRANE. SEE DETAIL 3A / AA191.
3. PROVIDE OVERFLOW SPILL OUT SCUPPER THROUGH RAISED CANTED ROOF EDGE FASCIA, SEE DETAIL 7 / AA191.
4. MODIFY EXISTING SPILL OUT SCUPPER TO REDUCE PROJECTION AS REQUIRED TO DRIP INTO NEW 6" GUTTER.
5. PROVIDE 6" X 6" ALUMINUM GUTTER EXTENDING FROM BELOW EXISTING SPILL OUT SCUPPER ALONG FACE OF WALL TO 4" X 4" DOWNSPOUT VERTICAL TO DOWNSPOUT BOOT INTO BELOW-GRADE STORM SEWER. SEE EXTERIOR ELEVATION AND SITE DRAWINGS.
6. REMOVE EXISTING ROOF SYSTEM AND WOOD BLOCKING INCLUDING ALL ROOF SYSTEM COMPONENTS, FLASHINGS, FASCIAS, COPINGS, DOWNSPOUTS AND ROOF DECK. PROVIDE ROOF DECK, STRUCTURAL STEEL, ROOF SYSTEM, WOOD BLOCKING, FLASHINGS AND FASCIAS. SEE DETAILS KEYED-IN ON PLAN, REFER TO ABATEMENT PLAN.
7. PROVIDE 6" X 6" ALUMINUM FASCIA SCUPPER WITH 4" X 4" ALUMINUM DOWNSPOUT WITH OFFSET ELBOWS TO WALLS, BOTTOM ELBOW AND SPLASH BLOCK AT GRADE. SEE DETAIL 3 / AA191
8. PATCH, CLEAN, PREPARE AND RE-COAT ALL EXISTING EIFS SURFACES (TYPICAL). SEE ELEVATION KEY NOTE 1.
9. EXISTING WALL MOUNTED AWNING/CANOPY. SEE ELEVATION KEY NOTE 24.
10. EXISTING POST MOUNTED CANOPY/AWNING. SEE ELEVATION KEY NOTE 25.
11. EXISTING STEEL DOOR AND FRAME. SEE ELEVATION KEY NOTE 5.
12. RETURN AND TERMINATE FASCIA AT RAISED CURB END CONDITION.

Structural Roof Key Notes

S1. REMOVE NORTH-SOUTH PORTION OF EXISTING CANOPY STRUCTURE, ENSURING THAT EAST-WEST STRUCTURE TO REMAIN CAN ACCEPT AND SUPPORT NEW COVERING AND END CAP.

S2. REMOVE EXISTING METAL ROOF DECK IN ITS ENTIRETY. PROVIDE NEW 1 1/2" WR 18 GA GALVANIZED METAL ROOF DECK. REFER TO 10/AA191 FOR NEW LOW ROOF FRAMING PLAN.

Existing Conditions Notes

A. THE FOLLOWING CONDITIONS WERE OBSERVED DURING TEST CUT ANALYSIS. THE CONTRACTOR IS REQUIRED TO VERIFY ALL EXISTING CONDITIONS AND PROVIDE A COMPLETE REMOVAL OF ALL MATERIALS ABOVE THE ROOF DECK AT LOCATIONS INDICATED:

B. TYPICAL AT ROOF CUT #1 AND #2:
- BUILT-UP ROOFING WITH AGGREGATE AND FIBERBOARD (APPROX. 1 1/2")
- METAL DECK
TOTAL THICKNESS ABOVE DECK = 1.5"

Roof Legend

(2011-05)
arch-rflgnd

- AREA OF TAPERED INSULATION (TYP). SEE ROOF PLAN.
- AREA OF TAPERED INSULATION CRICKET (TYP). SEE ROOF PLAN.
- AREA OF CANOPY/AWNING REMOVAL
- T / 1/8" — DIRECTION AND DEGREE OF DOWNWARD SLOPE OF TAPERED INSULATION (MINIMUM 1/8"/FT, TYP AT EXISTING ROOF AREAS UNO). SEE ROOF PLAN.
- OR — DIRECTION OF DOWNWARD SLOPE OF TAPERED INSULATION CRICKET (1/2"/FT, TYP UNO).
- +X.X" — TOTAL THICKNESS OF INSULATION INCLUDING COVERBOARD. SEE ROOF PLAN FOR TAPERED LAYOUTS
- RS-X — ROOF SYSTEM TYPE.
- #X — TEST CUT LOCATION, REFER TO EXISTING CONDITIONS NOTES

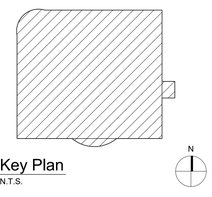

Key Plan
N.T.S.

Rev. No.:	Date:	Description:

TOMPKINS COUNTY

complex world | CLEAR SOLUTIONS

Tetra Tech Engineers, Architects & Landscape Architects, P.C.

STATE OF NEW YORK — KEVIN CHARLES TIAN — 079083 — LICENSED PROFESSIONAL ENGINEER

Reg. Expires: 10/31/2027

TETRA TECH
ARCHITECTS & ENGINEERS

Tompkins County
Ithaca, NY

Alterations to:
Tompkins County: Public Library
Exterior Upgrades Project

Roof Plan

Drawn By:	Date:	Drawing Number:
TLG	June 8, 2026	AA190
Project No.: 123174-23001.10		

It is a violation of the Education Law of the State of New York for any person to alter or modify this document in any way unless acting under the direction of a licensed architect.

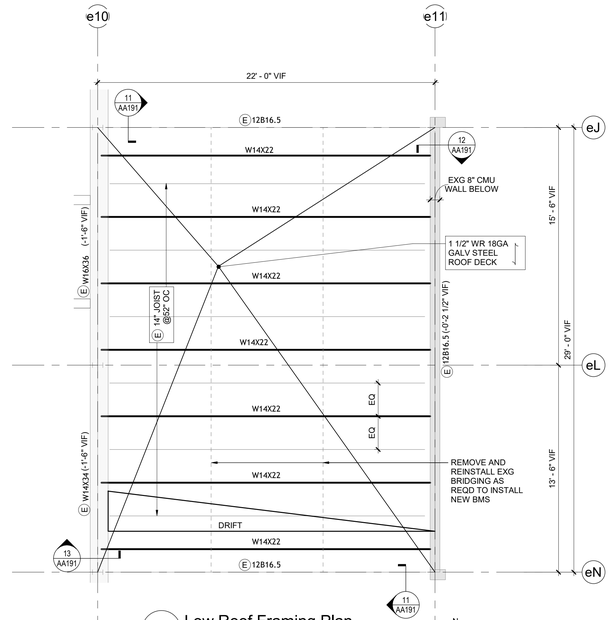

10 Low Roof Framing Plan
1/4" = 1'-0"
DATUM FOR TOP OF STEEL IS AT ELEVATION 112'-00" VIF

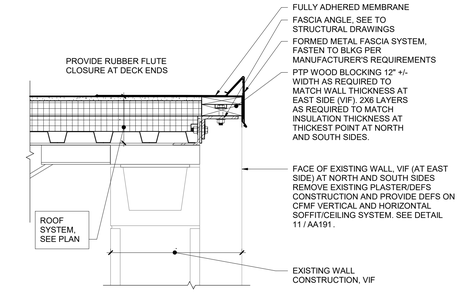

2 Roof Edge Detail
1 1/2" = 1'-0"

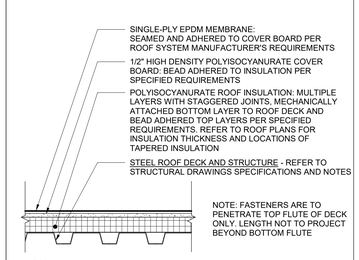

1 Roof System Detail
1 1/2" = 1'-0"

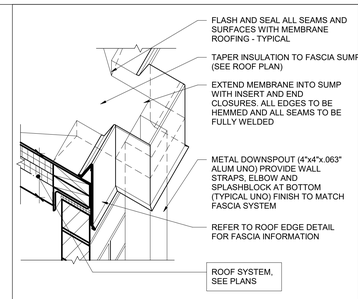

3 Fascia Sump With Downspout
1 1/2" = 1'-0"

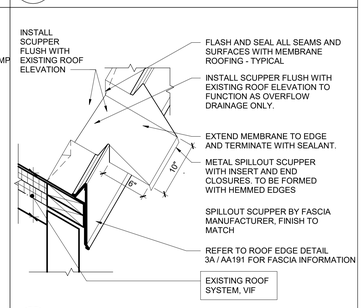

7 Fascia Overflow Scupper Detail
1 1/2" = 1'-0"

Elevation Key Notes

1. PATCH, CLEAN, PREPARE AND RE-COAT ALL EXISTING EIFS SURFACES (TYPICAL) INCLUDING REMOVAL OF ALL EXISTING SEALANTS AND RESEALING ALL JOINTS AND PERIMETERS, INCLUDES REMOVAL AND REINSTALLATION OF SURFACE MOUNTED SIGNAGE OR DISCARD AND PATCH EIFS TO MATCH EXISTING PER OWNER'S DIRECTION.
2. REMOVE EXPOSED FASTENER HARDWARE, PATCH EIFS OR MASONRY TO MATCH EXISTING.
3. REMOVE "101 E. GREEN STREET" SURFACE MOUNTED SIGNAGE LETTERING, PROTECT, STORE AND REINSTALL AFTER COMPLETION OF EIFS RESTORATION WORK.
4. EXISTING LIGHTED "TOMPKINS COUNTY PUBLIC LIBRARY" SIGNAGE LETTERING TO REMAIN, PROTECT AND CLEAN AS REQUIRED.
5. PREPARE, PRIME AND PAINT WITH HIGH PERFORMANCE COATING, ALL INTERIOR AND EXTERIOR EXPOSED SURFACES OF EXISTING STEEL DOOR AND FRAME AND DOOR FRAME TRIM.
6. CUT RUSTED BOTTOM EDGE OF EXISTING FORMED STEEL DOOR FRAME TRIM. PROVIDE 16 GAUGE STAINLESS STEEL FORMED ANGLE SHOE (APPROX. 6" HIGH) MECHANICALLY FASTENED OVERLAPPING EXISTING DOOR FRAME TRIM WITH STAINLESS STEEL FASTENERS AND SEALED AT ALL PERIMETERS.
7. PREPARE, PRIME AND PAINT WITH HIGH PERFORMANCE COATING, ALL EXPOSED AREAS OF EXISTING STRUCTURAL STEEL INCLUDING COLUMNS, BEAMS, BRACE FRAMES, ETC. (SEE STRUCTURAL DETAILS AND NOTES FOR AREAS REQUIRING ADDITIONAL STRUCTURAL STEEL WORK) SEE STRUCTURAL KEY NOTE S1 ON AA051 - TYPICAL. REMOVE, PROTECT, STORE, AND REINSTALL EXISTING BANNER POLES TO PERMORM WORK.
8. PREPARE, PRIME AND PAINT WITH HIGH PERFORMANCE COATING ALL EXPOSED SURFACES OF EXISTING CANTILEVERED STEEL CANOPY.
9. PREPARE, PRIME AND PAINT WITH HIGH PERFORMANCE COATING ALL EXPOSED SURFACES OF EXISTING STEEL LINTEL.
10. PREPARE, PRIME AND PAINT ALL EXPOSED SURFACES OF EXISTING STEEL RAILING SYSTEM.
11. PREPARE, PRIME AND PAINT WITH HIGH PERFORMANCE COATING, ALL EXPOSED SURFACES OF EXISTING METAL CLAD WINDOWSILLS AND VERTICAL CLAD PILASTER.
12. REMOVE, PROTECT, AND REINSTALL EXISTING WIRE WINDOW SCREENS SYSTEM, QTY 9, PREPARE, PRIME AND PAINT WITH HIGH PERFORMANCE COATING AND REINSTALL AFTER COMPLETION OF EIFS RESTORATION AND WINDOW CLEANING WORK.
13. REPAIR DAMAGED KNOCK-DOWN LOUVER FRAME.
14. REMOVE EXISTING PAINT AND COATINGS, PATCH, CLEAN, SEAL, PREPARE AND PAINT WITH HIGH PERFORMANCE COATING EXPOSED SURFACES OF EXISTING CONCRETE FOUNDATION AND COLUMN BASES. (SEE STRUCTURAL DETAILS AND NOTES FOR AREAS OF CONCRETE RECONSTRUCTION.
15. PATCH, CLEAN SEAL, PREPARE, PRIME AND PAINT WITH HIGH PERFORMANCE COATING EXPOSED SURFACES OF EXISTING WALL CAP.
16. THOROUGHLY CLEAN ALL INTERIOR AND EXTERIOR GLAZING AND GLAZING FRAME SURFACES.
17. PROVIDE MASONRY CLEANING AT ALL AREAS OF EXPOSED BRICK MASONRY - TYPICAL AT ALL AREAS OF BRICK MASONRY (INDICATED WITH BRICK HATCH PATTERN).
18. PROVIDE BRICK MASONRY JOINT RE-POINTING AT AREAS INDICATED ON ELEVATION DRAWINGS. DO NOT PLACE MORTAR IN WEEP OPENINGS, TYPICAL.
19. PROVIDE REPLACEMENT OF DAMAGED BRICK AT AREAS INDICATED ON ELEVATION DRAWINGS.
20. SAWCUT AND REMOVE MORTAR AT EXISTING CRACKED VERTICAL JOINT AND PROVIDE CONTINUOUS BACKER AND SEALANT, COLOR TO MATCH MORTAR.
21. PROVIDE BACKER AND SEALANT AT EXISTING PIPE PENETRATION THROUGH MASONRY WALL.
22. PROTECT EXISTING WALL ART FROM DAMAGE AND CONTACT WITH WATER AND CHEMICALS.
23. PROTECT EXISTING ELECTRICAL DEVICE (CAMERA, LIGHT FIXTURE, FIRE-ALARM, ETC.) FROM DAMAGE AND CONTACT WITH WATER AND CHEMICALS. TYPICAL - ALL LOCATIONS MAY NOT BE SHOWN.
24. REMOVE EXISTING CANVAS RADIUS AND END CAP COVERING AND PROVIDE CANVAS RADIUS AND END CAP COVERING ON EXISTING GALVANIZED STEEL FRAME AT EXISTING WALL MOUNTED AWNING/CANOPY. SEE AWNING/CANOPY NOTES.
25. REMOVE EXISTING RADIUS CANVAS COVERING AND EXISTING GALVANIZED STEEL FRAME ON STEEL POST AT NORTH/SOUTH PORTION OF "T" SHAPED AWNING CANOPY. REMOVE EXISTING RADIUS CANVAS COVERING AND PROVIDE RADIUS CANVAS COVERING WITH END CAP ON EXISTING GALVANIZED STEEL FRAME AND POSTS AT EASTWEST PORTION OF EXISTING "T" SHAPED AWNING CANOPY. SEE STRUCTURAL KEY NOTES S3, S4 AND S5. SEE AWNING/CANOPY NOTES.
26. PROVIDE 4' WIDE X 8' HIGH ALUMINUM GLAZED WIND SCREEN SYSTEM MECHANICALLY ATTACHED AND SEALED AT BUILDING WALL AND BOTTOM. PROVIDE FINISHED CAPS AT TOP AND FRONT, CENTER BETWEEN EXISTING WINDOW AND DOOR JAMBS.
27. REMOVE EXISTING VINES/PLANT GROWTH FROM SURFACES OF BUILDING WALL. REMOVE STUMPS TO BELOW GRADE. SEE SITE DRAWINGS.
28. REMOVE EXISTING DAMAGED METAL WALL AND SOFFIT PANELS (SOME WALL PANELS ARE ALREADY REMOVED). PROVIDE AIR-BARRIER MEMBRANE AND METAL WALL AND SOFFIT PANELS TO MATCH EXISTING AND INSTALL RADIUS TRIM FURNISHED BY OWNER. EXISTING FASCIA TO REMAIN – ADJUST AS REQUIRED (APPROX.. 24LF – VIF).
29. EXISTING DEFS. REMOVE EXISTING AND PROVIDE DEFS. SEE FLOOR PLAN KEY NOTE 3.
30. EXISTING MASONRY PLANTER. SEE SITE DRAWINGS. FOR WORK BY ALTERNATE 1. SEE ELEVATION KEY NOTE 17, 18, AND 37 FOR WORK BY BASE BID.
31. EXISTING RAMP AND HANDRAILS. SEE SITE DRAWINGS.
32. PROVIDE RAISED CANTED ROOF EDGE FASCIA. SEE ROOF KEY NOTE 2.
33. PROVIDE OVERFLOW SPILLOUT SCUPPER THOUGH RAISED CANTED ROOF EDGE FASCIA. SEE ROOF KEY NOTE 3.
34. PROVIDE CONTINUOUS BACKER AND SEALANT AT MASONRY CONTROL JOINT.
35. PROVIDE GUTTER, DOWNSPOUT, AND DOWNSPOUT BOOT. SEE ROOF KEY NOTES 4 AND 5.
36. SEE STRUCTURAL KEY NOTES S1 AND S2.
37. DRILL 3/8" HOLES THRU EXISTING VERTICAL MORTAR JOINTS AT 24" +/- OC FROM PLANTER FLOOR ELEVATION SLOPING TOWARDS EXTERIOR FACE OF BRICK.

General Notes

A. DO NOT SCALE DRAWINGS TO OBTAIN DIMENSIONS.

B. TAKE FIELD MEASUREMENTS TO FIT THE WORK PROPERLY. VERIFY ALL EXISTING CONDITIONS AND DIMENSIONS IN THE FIELD.

C. REFER INCONSISTENCIES TO ARCHITECT PRIOR TO COMMENCING THE WORK IN AFFECTED AREA.

D. ITEMS ARE SHOWN DIAGRAMMATICALLY ON DRAWINGS. VERIFY SPACE REQUIREMENTS AND DIMENSIONS TO FIT THE WORK PROPERLY.

E. NOTES SHOWN ON ONE DRAWING APPLY TO ALL SIMILAR DRAWINGS.

F. DO NOT DISTURB CONSTRUCTION SUSPECTED OF CONTAINING HAZARDOUS MATERIAL. IF ENCOUNTERED, IMMEDIATELY NOTIFY ARCHITECT AND OWNER.

General Elevation Notes

A. NOTES DESCRIBED ON ONE ELEVATION APPLY TO ALL ELEVATIONS, TYPICAL UNLESS OTHERWISE NOTED.

B. APPLY CONTINUOUS SEALANT WITH BACKER ROD AT ALL BLDG CONTROL AND EXPANSION JOINTS.

C. ALL PAINT AND FINISH COLORS ARE TO BE SELECTED BY OWNER AND ARCHITECT FROM MANUFACTURE'S FULL RANGE - TYPICAL.

General Awning/Canopy Notes

A. THE WORK CONSISTS OF REMOVING THE EXISTING FABRIC AND PROVIDING FABRIC INSTALLED ON EXISTING FRAMES AND FRAME PARTIAL DEMOLITION AT "T" CANOPY.
B. FABRIC PROPERTIES:
- BASE FABRIC - 100% SUNBRELLA ACRYLIC
- WEIGHT - 9 OZ/SQ YD
- FINISH COATING - WATER REPELLANT
- MOLD, MILDEW AND STAIN RESISTANT/BREATHABLE
- FADE AND UV RESISTANT
- PRODUCT CATEGORY - SUNBRELLA AWNING/MARINE 46 IN SOLIDS
- COLOR - TO BE SELECTED FROM MFR'S STANDARD 190+/- COLORS
- WARRANTY - 10 YEARS

C. SEWING THREAD PROPERTIES:
- BLACK - FIL-TEC 13847 - BDT 92 POLY SD BLACK TEX 90 UVR.
- WHITE - GORE TENARA SEWING THREAD - MTR 191003MTR-NW 1850 DENIER NATURAL WHITE

D. PROVIDED/INSTALLED BY:
- WELCO AWNINGS AND UPHOLSTERY
- 207 ELMIRA ROAD, ITHACA, NY 14850
- 607-277-4727/INFO@WECOAWNING.COM
- MICHAEL RHOADES: MICHAEL@WELCOAWNING.COM

Structural Loads:

A. FLOOR LIVE LOADS PER BCNYS 1607

OCCUPANCY OR USE	UNIFORM	CONCENTRATED
LIBRARY		
READING ROOMS	60 PSF	1000 LBS
STACK ROOMS	150 PSF	1000 LBS
(WITH LIMITATIONS PER TABLE 1607.1 NOTE b.)		
TOILET ROOMS	60 PSF	
MECHANICAL ROOMS	100 PSF	
STAIRS	100 PSF	300 LBS
STORAGE		
LIGHT	125 PSF	
HEAVY	250 PSF	

REDUCTION IN LIVE LOADS HAS BEEN APPLIED WHERE PERMITTED PER 1607.13

B. ROOF LIVE LOADS PER BCNYS 1607.14
MINIMUM ROOF LIVE LOAD 20 PSF

C. RAIN LOADS PER BCNYS 1611
RAIN INTENSITY, I 6.54 IN/HR
RAIN LOAD, R 26 PSF

RAIN SURCHARGE LOAD HAS BEEN APPLIED TO AREAS WHERE PONDING OCCURS IN ACCORDANCE WITH BCNYS 1611.2.

D. SNOW LOADS PER BCNYS 1608
GROUND SNOW, P_g (FIGURE 1608.2) 75 PSF
ALLOWABLE STRESS DESIGN GROUND SNOW, $P_{g(ass)}$ 52.5PSF
FLAT ROOF SNOW LOAD, P_f (ASCE 7) 47.3 PSF
SNOW EXPOSURE FACTOR, C_e 0.9
RISK CATEGORY I I I
THERMAL FACTOR, C_t 1.0
SLOPE FACTOR, C 1.0
SNOW LOAD IMPORTANCE FACTOR, I_S 1.0
WINTER WIND FOR SNOW DRIFT, W_2 0.55
DRIFT SURCHARGE, P_d 150.8 PSF
DRIFT WIDTH, w 22 FT

ADDITIONAL SNOW LOADS HAVE BEEN APPLIED TO AREAS WHERE DRIFTING OCCURS IN ACCORDANCE WITH BCNYS 1608.

E. WIND AND TORNADO LOAD DESIGN CRITERIA PER BCNYS 1609
BASIC DESIGN WIND SPEED (3 SECOND GUST), V 117 MPH
ALLOWABLE STRESS DESIGN WIND SPEED, V_{asd} 90.6 MPH
TORNADO WIND SPEED, V_T 50 MPH
RISK CATEGORY III
EFFECTIVE PLAN AREA, A_e 70,000 SQFT
EXPOSURE CATEGORY B
INTERNAL PRESSURE COEFFICIENT, GCPi +/- 0.18
WIND DIRECTIONALITY FACTOR, K_d 0.85
TOPOGRAPHIC FACTOR, K_{zt} 1.0
GROUND ELEVATION FACTOR, K_e 1.0

F. SEISMIC DESIGN CRITERIA PER BCNYS 1613
RISK CATEGORY III
SEISMIC IMPORTANCE FACTOR, I_e 1.25
MAPPED SPECTRAL RESPONSE ACCELERATION
AT SHORT PERIODS, S_S 14.0 %g
AT 1 SECOND PERIODS, S_1 4.1 %g
SITE CLASS D
DESIGN SPECTRAL RESPONSE ACCELERATION
AT SHORT PERIODS, S_{DS} 12 %g
AT 1 SECOND PERIODS, S_{D1} 5.9 %g
SEISMIC DESIGN CATEGORY A

THE STRESS INCREASE TO (OR CAPACITY DECREASE OF) THE EXISTING SEISMIC FORCE RESISTING SYSTEM RESULTING FROM NEW WORK DOES NOT EXCEED THE LIMITS ALLOWED UNDER THE EXISTING BUILDING CODE OF NEW YORK STATE.

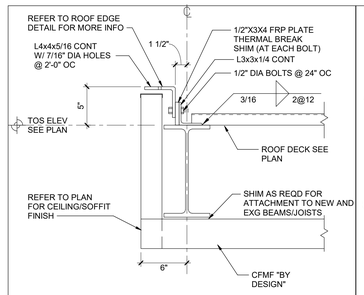

11 Typical Fascia Detail
1 1/2" = 1'-0"

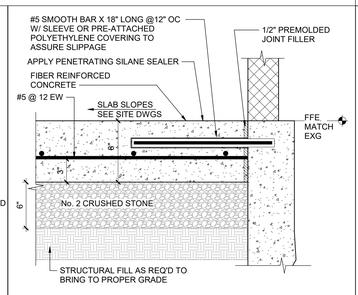

8 Typ Structural Slab on Grade
1 1/2" = 1'-0"

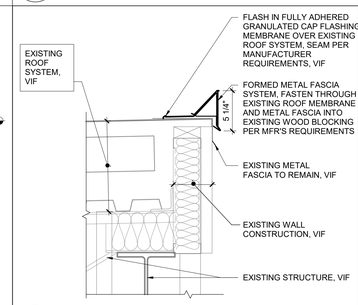

3A Roof Edge Detail
1 1/2" = 1'-0"

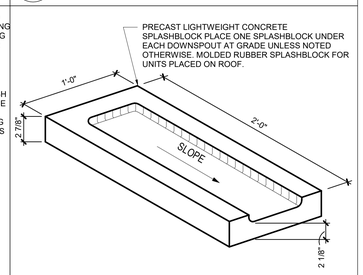

4 Splashblock Detail
1 1/2" = 1'-0"

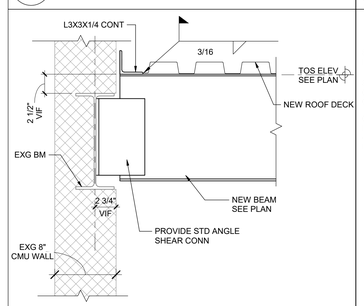

12 Beam Conn to Exg Beam
1 1/2" = 1'-0"

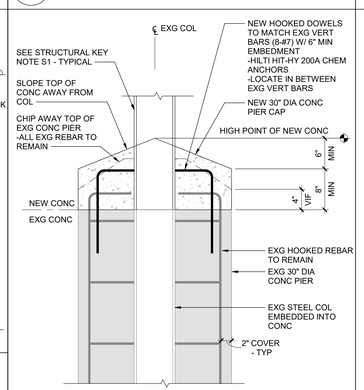

NOTE :
- CLEAN ALL EXPOSED STEEL
- APPLY RUST INHIBITOR TO SURFACE OF COLUMN TO BE ENCASED IN NEW CONCRETE
- APPLY BONDING AGENT BETWEEN EXISTING AND NEW CONCRETE
- APPLY SILICONE SEALANT ALONG JOINT BETWEEN CONCRETE AND STEEL

9 Concrete Col Base Reconstruction
1" = 1'-0"

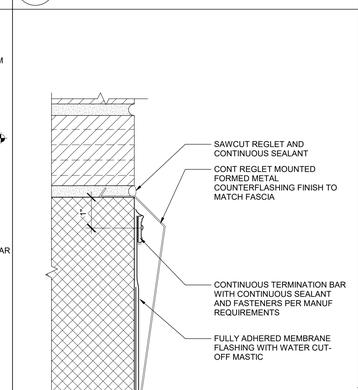

ONE-PIECE REGLET MOUNT COUNTER FLASHING DETAIL TYPICAL

6 Enlarged Flashing Detail
6" = 1'-0"

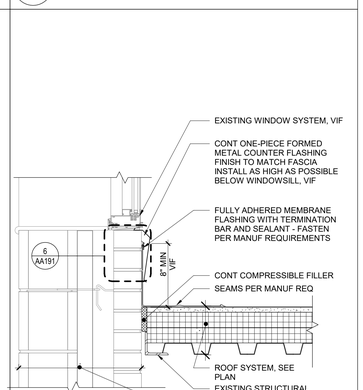

NOTE: RAISE ELEVATION OF EXISTING THROUGH-WALL FLASHING

5 Base Flashing Detail
1 1/2" = 1'-0"

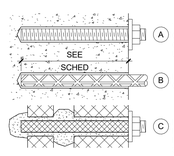

BAR/ROD SIZE	EMBEDMENT DEPTH
#4 OR 1/2"	5"
#5 OR 5/8"	6"
#6 OR 3/4"	7"
#7 OR 7/8"	8"
#8 OR 1"	9"

GENERAL NOTES
1. FOR ACCEPTABLE ADHESIVE PRODUCTS REFER TO SPECIFICATIONS.
2. COMPLY WITH MANUFACTURERS REQUIREMENTS FOR INSTALLATION.

14 Typical Chemical Anchors
3" = 1'-0"

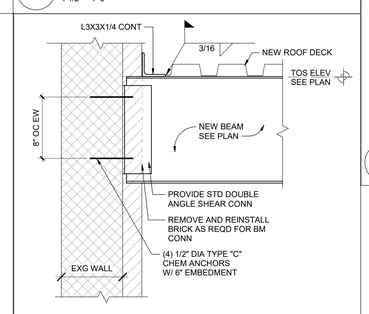

13 Beam Conn to Exg Wall
1 1/2" = 1'-0"

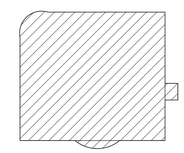

Key Plan
N.T.S.

Rev. No.:	Date:	Description:

complex world | CLEAR SOLUTIONS

Tetra Tech Engineers, Architects & Landscape Architects, P.C.

STATE OF NEW YORK · KEVIN CHARLES TIERNEY · 079085 · LICENSED PROFESSIONAL ENGINEER
Reg. Expires: 10/31/2027

TETRA TECH ARCHITECTS & ENGINEERS

Tompkins County
Ithaca, NY

Alterations to:
Tompkins County: Public Library
Exterior Upgrades Project

Details and Notes

Drawn By:	Date:	Drawing Number:
TLG/KR	June 8, 2026	AA191
Project No.: 123174-23001.10		

It is a violation of the Education Law of the State of New York for any person to alter or modify this document in any way unless acting under the direction of a licensed architect.

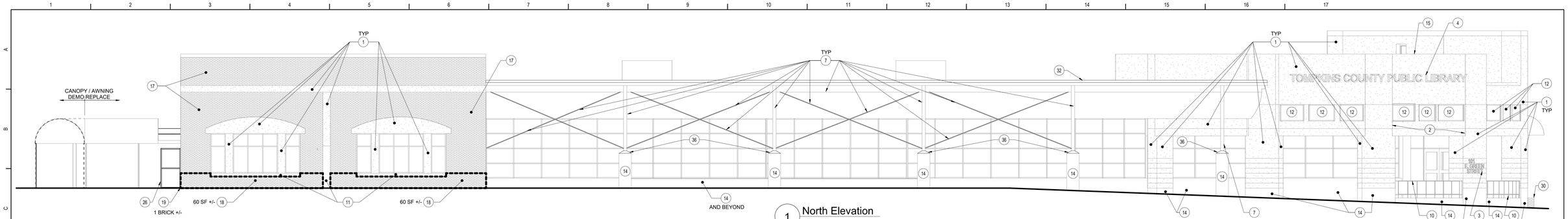

1 North Elevation
1/8" = 1'-0"
16 23 TYPICAL AT ALL AREAS

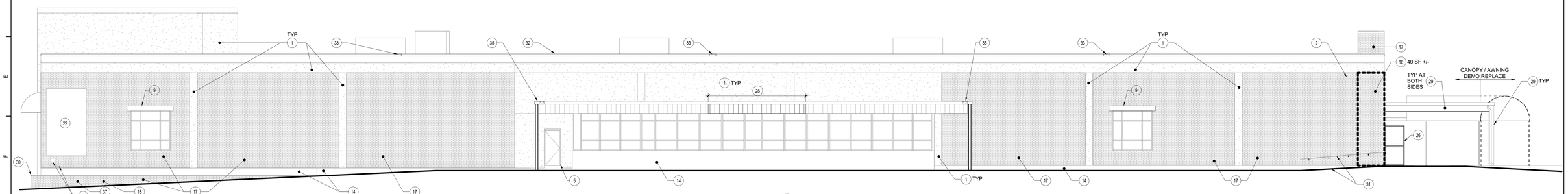

2 South Elevation
1/8" = 1'-0"
16 23 TYPICAL AT ALL AREAS

REFER TO AA191 FOR GENERAL NOTES AND KEY NOTES

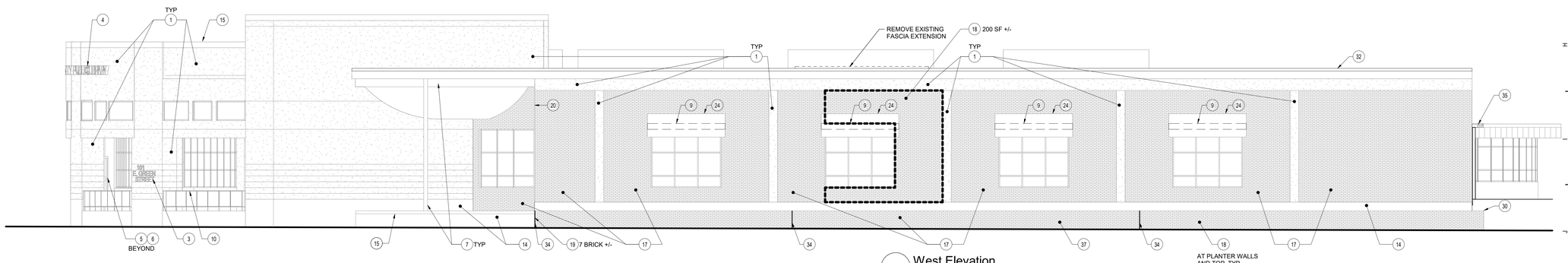

3 West Elevation
1/8" = 1'-0"
16 23 TYPICAL AT ALL AREAS

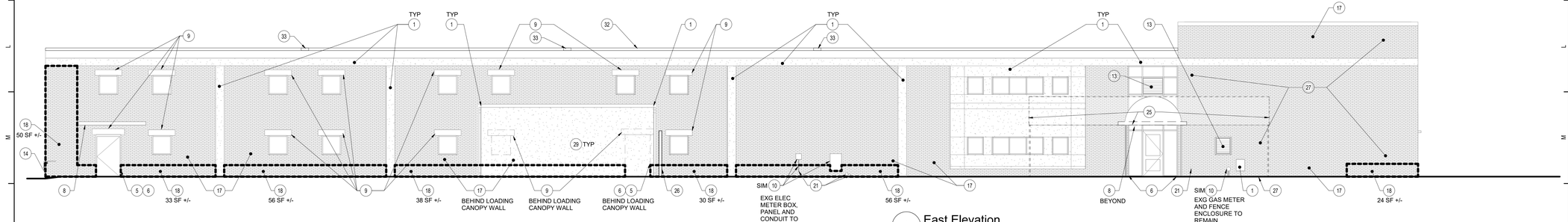

4 East Elevation
1/8" = 1'-0"
16 23 TYPICAL AT ALL AREAS

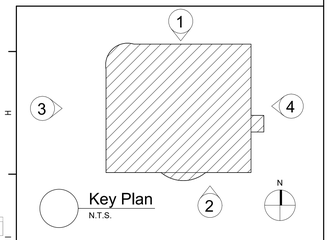

Key Plan
N.T.S.

Rev. No.:	Date:	Description:

complex world | CLEAR SOLUTIONS

Tetra Tech Engineers, Architects & Landscape Architects, P.C.

Reg. Expires: 10/31/2027

TETRA TECH ARCHITECTS & ENGINEERS

Tompkins County
Ithaca, NY

Alterations to:
Tompkins County: Public Library
Exterior Upgrades Project

Exterior Elevations

Drawn By:	Date:	Drawing Number:
TLG	June 8, 2026	AA200
Project No.: 123174-23001.10		

It is a violation of the Education Law of the State of New York for any person to alter or modify this document in any way unless acting under the direction of a licensed architect.

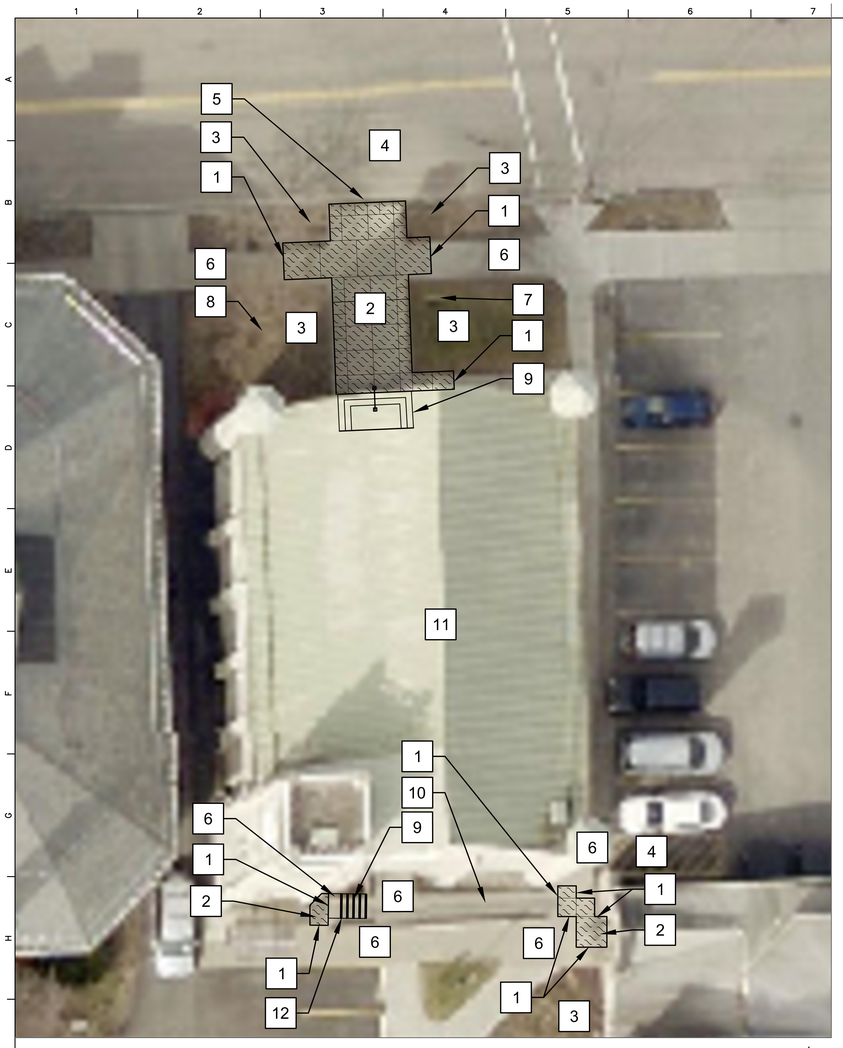

Site Layout Keynotes

1 SAW CUT EXISTING CONCRETE SIDEWALK AT NEAREST JOINT, LEAVING A NEAT, SMOOTH, AND STRAIGHT EDGE (TYPICAL).

2 REMOVE EXISTING CONCRETE SIDEWALK AND SUBBASE AS NECESSARY TO ALLOW INSTALLATION OF PROPOSED IMPROVEMENTS (TYPICAL).

3 EXISTING LAWN AREA TO REMAIN - REPAIR AS REQUIRED

4 EXISTING ASPHALT PAVEMENT, PROTECT.

5 EXISTING CURB TO REMAIN, PROTECT.

6 EXISTING CONCRETE SIDEWALK TO REMAIN, PROTECT.

7 EXISTING SIGNAGE TO REMAIN, PROTECT. TYPICAL.

8 EXISTING TREE TO REMAIN, PROTECT. TYPICAL.

9 EXISTING STEPS TO REMAIN, PROTECT.

10 EXISTING RAMP TO REMAIN, PROTECT.

11 EXISTING BUILDING TO REMAIN, PROTECT.

12 REMOVE EXISTING STEP CAPS (5).

SITE DEMOLITION AND PREPARATION LEGEND	
	REMOVE EXISTING CONCRETE PAVEMENT SECTION AND SUBBASE AS REQUIRED

1 Site Demo Plan

1" = 10'

0 5' 10' 20'
SCALE: 1" = 10'

N

Site Preparation/Demolition General Notes

1. THESE GENERAL SITE / PREPARATION / DEMOLITION NOTES REFER TO C-SERIES DRAWINGS.
2. THE INTENT OF THIS DRAWING IS TO INDICATE PREPARATORY WORK, REMOVALS AND DEMOLITION NECESSARY TO CONSTRUCT THE PROJECT AS SHOWN ON THE REST OF THE CONTRACT DRAWINGS. SOME NOTES ARE GENERAL IN NATURE AND IT SHALL BE UNDERSTOOD THAT IT IS NOT FEASIBLE TO INDICATE EACH AND EVERY SPECIFIC REMOVAL. SITE PREPARATION / DEMOLITION DRAWINGS SHALL NOT BE USED ALONE, BUT SHALL BE USED IN CONJUNCTION WITH THE OTHER DRAWINGS FOR WORK TO BE REMOVED, REUSED, AND / OR REVISED NOT INDICATED HERE.
3. CONTRACTOR TO MAINTAIN UTILITY SERVICES TO BUILDINGS TO REMAIN. IF UTILITY SERVICES MUST BE INTERRUPTED THE CONTRACTOR SHALL COORDINATE THAT SHUTDOWN TO MINIMIZE IMPACT TO BUILDINGS. SEE PROJECT MANUAL REGARDING COORDINATION OF DEMOLITION WORK WITH UTILITY COMPANIES.
4. THE CONTRACTOR IS RESPONSIBLE TO MAINTAIN SAFE SITE ACCESS TO PEDESTRIAN, VEHICULAR TRAFFIC, EMERGENCY AND HEALTH SAFETY AGENCIES. IF ACCESS WILL BE COMPROMISED IT WILL BE THE RESPONSIBILITY OF THE CONTRACTOR TO COORDINATE AT LEAST ONE WEEK IN ADVANCE WITH THE OWNER'S REPRESENTATIVE AND HEALTH SAFETY AGENCIES, UNLESS OTHERWISE NOTED IN PROJECT MANUAL.
5. UTILITIES, SIDEWALKS, PAVEMENT, SLABS, FOUNDATIONS, AND MISCELLANEOUS FEATURES NOTED TO BE DEMOLISHED SHALL BE SPOILED OFF-SITE IN A LEGAL MANNER UNLESS OTHERWISE DIRECTED BY THE OWNER'S REPRESENTATIVE. NO BURNING OF DEBRIS SHALL BE ALLOWED. IMMEDIATELY BACKFILL VOIDS WITH COMPACTED GRANULAR MATERIAL AS SPECIFIED.
6. WHEN A SITE FEATURE IS INDICATED TO BE REMOVED, THE SITE FEATURE, INCLUDING APPURTENANCES AND FOOTINGS, SHALL BE DISPOSED OF LEGALLY OFF SITE, UNLESS OTHERWISE INDICATED. IMMEDIATELY BACKFILL VOIDS WITH COMPACTED GRANULAR MATERIALS AS SPECIFIED.
7. WHEN A SITE FEATURE IS INDICATED TO REMAIN, IT SHALL BE PROTECTED AS INDICATED AND / OR SPECIFIED. WHEN DISTURBANCE OCCURS AROUND AN EXISTING FEATURE, THE CONTRACTOR SHALL USE ADDITIONAL PRECAUTIONS INCLUDING, BUT NOT LIMITED TO HAND DIGGING TO PROTECT THE FEATURE.
8. EXISTING ON-SITE UTILITIES SHALL REMAIN UNLESS DESIGNATED FOR REMOVAL. PROTECT ALL EXISTING UTILITIES TO REMAIN.
9. MANHOLES, CATCH BASINS, CLEAN OUTS, VALVE BOXES, FRAMES, COVERS AND GRATES REMAINING IN USE SHALL BE PROTECTED AND ADJUSTED TO FINAL GRADES. CONTRACTOR SHALL MAINTAIN POSITIVE DRAINAGE AT ALL TIMES.
10. CONTRACTOR IS RESPONSIBLE TO VERIFY GRADES AND UTILITIES SHOWN ON EXISTING CONDITIONS PLAN PRIOR TO START OF WORK. DISCREPANCIES ARE TO BE DOCUMENTED AND SUBMITTED TO THE OWNER'S REPRESENTATIVE AT THE TIME OF DISCOVERY.
11. CONTRACTOR SHALL BE RESPONSIBLE FOR RELOCATIONS, INCLUDING, BUT NOT LIMITED TO, UTILITIES, STORM DRAINAGE, SIGNS, ETC. AS INDICATED ON DESIGN DOCUMENTS.
12. IF EXISTING SITE FEATURES TO REMAIN ARE DAMAGED DURING CONSTRUCTION BY CONTRACTOR, SITE FEATURES SHALL BE REPAIRED IN-KIND, TYPICAL.
13. CONTRACTOR TO REMOVE OR RELOCATE, WHEN APPLICABLE, ALL CONNECTING IMPROVEMENTS, DRAIN PIPES, SANITARY SEWER PIPES, POWER POLES, AND GUY WIRES, WATER METERS AND WATER LINES, WELLS, SIDEWALKS, SIGN POLES, UNDERGROUND GAS, SEPTIC TANKS, AND ASPHALT, SHOWN AND NOT SHOWN, WITHIN CONSTRUCTION LIMITS AND WHERE NEEDED, TO ALLOW FOR NEW CONSTRUCTION AS SHOWN.
14. CONTRACTOR TO NOTIFY OWNERS REPRESENTATIVE IF UNIDENTIFIED UTILITIES ARE ENCOUNTERED INCLUDING, BUT NOT LIMITED TO, STORM SEWER, SANITARY SEWER, TELECOMMUNICATIONS SERVICE, ELECTRICAL SERVICE, GAS SERVICE, WATER SERVICE, IRRIGATION LINES. UTILITIES LINES TO REMAIN UNDISTURBED UNTIL DIRECTED BY OWNERS REPRESENTATIVE.
15. CONTRACTOR SHALL REQUEST UFPO PRIOR TO START OF ANY WORK. "DIG SAFELY NEW YORK - CALL 811 - BEFORE YOU DIG".

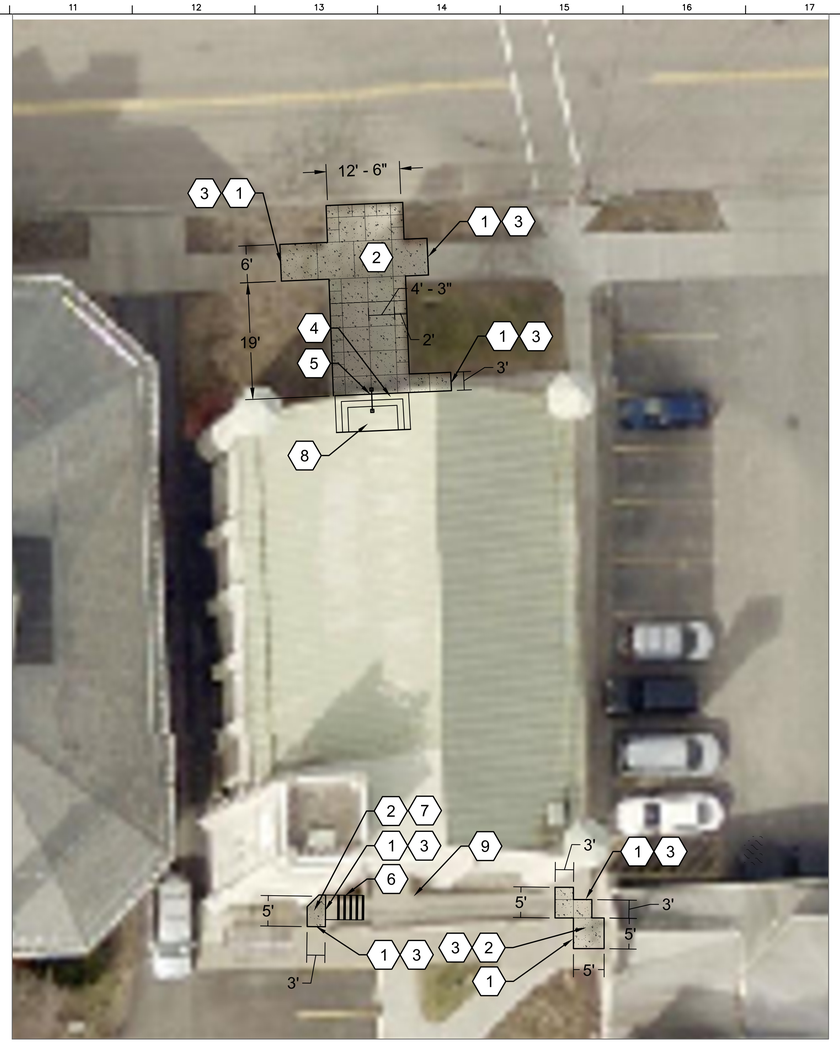

Site Layout Keynotes

1 SMOOTH TRANSITION FROM PROPOSED SURFACE TO ADJACENT EXISTING SURFACE, TYPICAL.

2 CONCRETE SIDEWALK. SEE DETAILS 3 AND 5 / AC500.

3 NEW CONCRETE SIDEWALK AT EXISTING CONCRETE SIDEWALK. SEE DETAIL 4 / AC500.

4 EXPANSION JOINT AT EXISTING SLAB. SEE DETAIL 10 / AC500.

5 REMOVE RAILING, PREP, PRIME AND PAINT, AS PER MANUFACTURES RECOMMENDATIONS, EXISTING STEEL RAILINGS WITH HIGH PERFORMANCE PAINT (MATCH BUILDING EXTERIOR). SEE HIGH PERFORMANCE PAINT SPECIFICATIONS FOR ADDITIONAL INFORMATION. ADD NEW STAINLESS STEEL FASTENERS.

6 PROVIDE AND INSTALL AMERICAN STAIR TREADS - "GRIT STRIP METAL STAIR NOSING" (QTY - 5). MATCH EXISTING SIZE AND COLOR

7 CLEAN RUST STAIN OFF WALK.

8 RAKE OUT OLD GROUT/CALK AT GRANITE JOINTS. PROVIDE NEW CALK.

9 PATCH CONCRETE HOLE AT TOP OF RAMP.

Site Layout Legend	
	CONCRETE PAVING
	CONCRETE WALK

2 Site Layout Plan

1" = 10'

0 5' 10' 20'
SCALE: 1" = 10'

N

General Site Notes

1. REFER TO DRAWING AC100 FOR GENERAL SITE NOTES THAT APPLY TO ALL C-SERIES DRAWINGS.

Site Layout Notes

1. LAYOUT DIMENSIONS GIVEN ARE FROM FACE OF BUILDING (FOB), FACE OF CURB (F.O.C.), CENTER LINE (CL) AND EDGE OF PAVEMENTS UNLESS OTHERWISE NOTED.
2. OBJECTS ARE PARALLEL OR PERPENDICULAR TO EACH OTHER UNLESS OTHERWISE NOTED.
3. VERIFY DIMENSIONS IN FIELD WITH OWNER'S REPRESENTATIVE ANY DIMENSIONS NOTED AS "V.I.F."
5. AT EDGE OF NEW PAVING MEETING LAWN: ADD TOPSOIL ALONG EDGE OF NEW PAVING TO BRING ADJACENT GRADE FLUSH WITH EDGE OF NEW PAVING AT MAXIMUM 3% SLOPE. CUT NEAT LINE IN EXISTING LAWN AT NEW TOPSOIL LIMIT LINE. REFER TO PROJECT MANUAL SIDEWALK AND ASPHALT PAVEMENT SECTIONS FOR ADDITIONAL REQUIREMENTS.
6. SCORE CONCRETE SIDEWALKS AT 5-FT SQUARE UNLESS OTHERWISE NOTED.

Rev. No.:	Date:	Description:

TOMPKINS COUNTY

complex world | CLEAR SOLUTIONS

Tetra Tech Engineers, Architects & Landscape Architects, P.C.

STATE OF NEW YORK · KEVIN CHARLES TERRY · 079083 · LICENSED PROFESSIONAL ENGINEER

Reg. Expires: 10/31/2027

TETRA TECH
ARCHITECTS & ENGINEERS

Tompkins County
Ithaca, NY

Alterations to:
Tompkins County: Public Library
Exterior Upgrades

Site Daniel D. Tompkins Building Plan
121 East Court Street, Ithaca

Drawn by:	Date:	Drawing No.:
LGB	June 8, 2026	BC120
Project No.: 123174-23001.10		

It is a violation of the Education Law of the State of New York for any person to alter or modify this document in any way unless acting under the direction of a licensed architect.