ELECTRICAL DEMOLITION NOTES

1. THE CONTRACTOR SHALL INCLUDE IN HIS BID ALL COSTS ASSOCIATED WITH REMOVALS AND RELOCATIONS OF ELECTRICAL WORK AS DESCRIBED IN THE SPECIFICATIONS WITH ALLOWANCES FOR EXPECTED OR UNFORESEEN DIFFICULTIES WHEN CONCEALED WORK HAS BEEN OPENED. NO CLAIMS FOR ADDITIONAL WORK ASSOCIATED WITH DEMOLITION WILL BE ACCEPTED, EXCEPT IN CERTAIN CASES CONSIDERED JUSTIFIABLE BY THE ARCHITECT.

2. THE CONTRACTOR SHALL REMOVE AND/OR RELOCATE ALL EXISTING ELECTRICAL WORK WHICH INTERFERES WITH THE NEW ARCHITECTURAL AND ELECTRICAL LAYOUTS IN FULL COORDINATION WITH THE ARCHITECT'S DEMOLITION PLANS. ALL SYSTEMS WHICH ARE NO LONGER REQUIRED TO FUNCTION SHALL BE DE- ENERGIZED AND DISCONNECTED AT THE SOURCE OF POWER SUPPLY.

3. THE CONTRACTOR SHALL PERFORM DEMOLITION AND REMOVAL WORK WITH MINIMUM INTERFERENCE WITH FUNCTIONING ELECTRICAL SYSTEMS. ALL AFFECTED SYSTEMS SHALL BE RECONNECTED AND RESTORED.

4. DEMOLITION AND REMOVAL WORK SHALL BE PERFORMED IN A NEAT AND WORKMANLIKE MANNER. THE CONTRACTOR SHALL PATCH, REPAIR OR OTHERWISE RESTORE ANY DAMAGED INTERIOR OR EXTERIOR BUILDING SURFACE TO ITS ORIGINAL CONDITION.

5. THE CONTRACTOR SHALL REMOVE ALL ELECTRICAL OUTLETS, SWITCHES AND OTHER DEVICES, COMPLETE WITH ASSOCIATED WIRING, CONDUITS, ETC., FROM PARTITIONS THAT ARE TO BE REMOVED. WHERE THE REMOVAL OF THESE ITEMS DISRUPTS EXISTING WIRING THAT IS TO REMAIN, THE CONTRACTOR SHALL INSTALL JUNCTION BOXES AND OTHER DEVICES AND PROVIDE BYPASS CONNECTIONS NECESSARY TO MAKE CIRCUITS AFFECTED CONTINUOUS AND READY FOR OPERATION. OTHERWISE, WIRING SHALL BE REMOVED BACK TO THE NEAREST ELECTRICAL JUNCTION BOX THAT IS TO REMAIN OR TO PANELBOARD.

6. ALL RACEWAYS WHICH BECOME EXPOSED DURING THE ALTERATION WORK SHALL BE REMOVED AND REROUTED CONCEALED BEHIND FINISHED SURFACES.

7. ALL UNUSED OUTLET BOXES OR CAPPED FLOOR OUTLETS SHALL BE PROVIDED WITH MATCHING BLANK COVERS.

8. EXISTING PANEL DIRECTORIES AFFECTED BY THE ALTERATION WORK SHALL BE MODIFIED TO REFLECT THE BRANCH CIRCUIT WIRING CHANGES.

9. PORTIONS OF FEEDER RUNS TO BE REMOVED OR ABANDONED AS A RESULT OF DEMOLITION WORK, BUT WHICH ARE REQUIRED TO REMAIN ENERGIZED, SHALL BE CUT AT CONVENIENT LOCATIONS, REROUTED AND RECONNECTED. NEW FEEDER EXTENSIONS SHALL MATCH EXISTING ONES IN ALL RESPECTS, CABLE TYPE, CONDUCTOR AMPACITY, CONDUIT SIZES, ETC.

10. THE CONTRACTOR SHALL NOTIFY THE OWNER AT THE APPROPRIATE TIME OF THE PROJECTED DEMOLITION AND PHASING SCHEDULE SO THAT REMOVAL OR RELOCATION OF AFFECTED UTILITIES MAY BE CARRIED OUT IN COORDINATION WITH THE PROJECT REQUIREMENTS. THE CONTRACTOR SHALL FOLLOW CLOSELY THE ARCHITECT'S DEMOLITION AND PHASING SCHEDULE AND PROCEED IN THE SPECIFIED SEQUENCE.

11. ALL EXISTING MATERIAL AND EQUIPMENT IN USABLE CONDITION, WHICH IS TO BE REMOVED UNDER THIS CONTRACT, SHALL REMAIN THE PROPERTY OF THE OWNER OR SHALL BE DISPOSED OF BY THE ELECTRICAL CONTRACTOR, AS DIRECTED BY THE OWNER.

12. ALL EXISTING DATA OUTLETS IN AREA OF SCOPE OF WORK SHALL BE REMOVED. REFER TO ARCHITECTURAL DRAWINGS FOR ADDITIONAL INFORMATION.

13. FINAL DISCONNECTS OF FIRE ALARM DEVICES NO LONGER IN USED TO BE MADE BY BUILDING FIRE ALARM CONTRACTOR.

ARC FLASH STUDY

ELECTRICAL CONTRACTOR SHALL COMPLY WITH ARC FLASH REQUIREMENTS PER NFPA 70E AS PART OF THIS PROJECT ON ALL ELECTRICAL PANELS. ELECTRICAL CONTRACTOR SHALL PERFORM A COORDINATION STUDY, FINAL BREAKER SETTINGS, AND LABEL REQUIREMENTS AS A PART OF THE PROJECT. SUBMIT BREAKER SETTING INFORMATION, COORDINATION STUDY, AND AS-BUILT DRAWINGS INCLUDING A 1 LINE DIAGRAM TO OWNER AS PART OF THE CLOSE OUT DOCUMENTS.

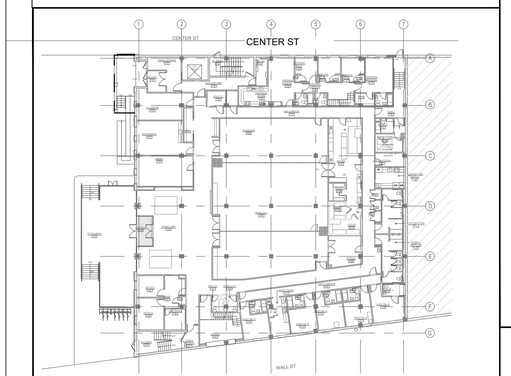

SITE PLAN
NOT TO SCALE

GENERAL NOTES

1. ELECTRICAL DRAWINGS ARE DIAGRAMMATIC, SIZES AND LOCATION OF EQUIPMENT AND WIRING ARE SHOWN TO SCALE WHERE POSSIBLE, BUT MAY BE DISTORTED FOR CLARITY ON THE DRAWINGS. FINAL LOCATION OF OUTLETS AND EQUIPMENT SHALL BE AS APPROVED BY THE ARCHITECT OR HIS REPRESENTATIVE. IT IS NOT WITHIN THE SCOPE OF DRAWINGS TO SHOW ALL NECESSARY BENDS, OFFSETS, PULL BOXES AND OBSTRUCTIONS. IT SHALL BE THE RESPONSIBILITY OF THE CONTRACTOR TO INSTALL HIS WORK TO CONFORM TO THE STRUCTURE, PRESERVE HEADROOM AND KEEP OPENINGS AND PASSAGEWAYS CLEAN.

2. BIDDERS, BEFORE SUBMITTING A PROPOSAL, SHALL VISIT AND CAREFULLY EXAMINE THE AREAS AFFECTED BY THIS WORK TO BECOME FAMILIAR WITH EXISTING CONDITIONS AND WITH THE DIFFICULTIES THAT WILL ATTEND THE EXECUTION OF THIS WORK. SUBMISSION OF A PROPOSAL WILL BE CONSTRUED AS EVIDENCE THAT SUCH AN EXAMINATION HAS BEEN MADE. LATER CLAIMS WILL NOT BE RECOGNIZED FOR EXTRA LABOR, EQUIPMENT OR MATERIALS REQUIRED BECAUSE OF DIFFICULTIES ENCOUNTERED WHICH COULD HAVE BEEN FORESEEN HAD SUCH EXAMINATION BEEN MADE.

3. FURNISH AND INSTALL WIRING FOR EQUIPMENT FURNISHED BY OTHERS, AS SHOWN ON ARCHITECTURAL, HVAC, PLUMBING AND/OR ELECTRICAL DRAWINGS. COORDINATE WITH OTHER TRADES FOR DETAILS OF INSTALLATION AND WIRING REQUIREMENTS. THE TERM "WIRING" AS USED HEREIN SHALL INCLUDE FURNISHING AND INSTALLING CONDUIT, WIRES, JUNCTION/OUTLET BOXES, DISCONNECTS, OVERCURRENT PROTECTION AND FINAL CONNECTIONS. COORDINATE FINAL CONDUCTOR SIZES, QUANTITIES, VOLTAGE REQUIREMENTS, AND OVERCURRENT DEVICE AND OUTLET RATINGS WITH ACTUAL EQUIPMENT TO BE FURNISHED TO THE SITE PRIOR TO FINALIZING WIRING INSTALLATION. MINOR ADJUSTMENTS TO WIRING REQUIREMENTS NECESSARY TO ACCOMMODATE ACTUAL FURNISHED EQUIPMENT SHALL BE PROVIDED AT NO ADDITIONAL COST TO OWNER.

4. VERIFY LOCATIONS AND QUANTITY OF ALL ELECTRICAL EQUIPMENT WITH ARCHITECTURAL DRAWINGS OR INTERIOR DETAILS. IN CENTERING OUTLETS AND LOCATING BOXES OR OUTLETS, ALLOW FOR OVERHEAD PIPES, DUCTS, MECHANICAL EQUIPMENT, VARIATIONS IN FIREPROOFING AND PLASTERING, WINDOW AND DOOR TRIM, PANELING, HUNG CEILING, ETC., AND CORRECT ANY INACCURACY RESULTING FROM FAILURE TO DO SO WITHOUT EXPENSE TO OWNER.

5. ALL WORK SHOWN ON THE DRAWINGS SHALL BE FURNISHED AND INSTALLED BY THIS CONTRACTOR, UNLESS OTHERWISE INDICATED.

6. SEE MECHANICAL CONTRACT DOCUMENTS FOR EXACT QUANTITY, LOCATION AND ELECTRICAL CHARACTERISTICS OF MECHANICAL EQUIPMENT.

7. ELECTRICAL CONTRACTOR IS RESPONSIBLE FOR ALL FINAL CONNECTIONS.

8. ELECTRICAL CONTRACTOR IS RESPONSIBLE FOR ALL CONNECTIONS TO EQUIPMENT TERMINALS, IF NOT AN INTEGRAL PART OF THE EQUIPMENT, AND SPLICES SHALL BE BY MEANS OF APPROVED COMPRESSION TYPE COPPER CONNECTORS.

9. SEE ARCHITECTURAL ELEVATIONS AND DETAILS FOR EXACT QUANTITY & LOCATIONS AND MOUNTING HEIGHTS OF RECEPTACLES AND OUTLETS FOR ELECTRICAL DEVICES, WHERE APPLICABLE.

10. COORDINATE LOCATION OF ALL DEVICES (I.E.. DETECTORS, FIXTURES, AND ALL OTHER CEILING MOUNTED DEVICES) WITH OTHER TRADES (I.E.. DUCTWORK, SPRINKLERS, ETC.).

11. LIGHTING AND APPLIANCE CIRCUIT NUMBERS NOTED ON PLANS ARE INTENDED AS A GUIDE. FINAL NUMBERING SYSTEM TO BE NOTED ON AS-BUILT DRAWINGS AND ON TYPED PANELBOARD DIRECTORY CARDS.

12. WHEREVER A CIRCUIT OR HOMERUN IS NOTED (I.E.. AT EACH LOCATION WHERE A JUNCTION/PULL BOX WITH A HOMERUN NOTATION IS INDICATED FOR AN ITEM OF EQUIPMENT, AT EACH LOCATION WHERE A DISCONNECT SWITCH FOR A MOTOR IS INDICATED WITH THE FEEDER SIZING PER SCHEDULE, ETC.) CONNECT THE ITEM WITH THE REQUIRED CONDUIT AND WIRE FROM SOURCE TO LOAD.

13. QUANTITY AND SIZE OF WIRE (CABLE) AND SIZE OF CONDUIT SHALL BE AS REQUIRED BY CODE IF NOT SPECIFICALLY INDICATED, NOTED SIZES ARE FOR REFERENCE AND ARE MINIMUMS. INCREASE WIRE SIZE AS REQUIRED FOR VOLTAGE DROP.

14. PROVIDE ALL REQUIRED GROUNDING ENCLOSED IN CONDUIT.

15. PROVIDE ALL AUXILIARY STEEL MEMBERS AS REQUIRED FOR THE SUPPORT OF ELECTRICAL WORK TO BUILDING STRUCTURE. SECURE ALL SUPPORTS TO BUILDING STRUCTURE.

16. RACEWAY ROUTING SHOWN IS DIAGRAMMATIC AND INDICATES GENERAL INTENT, ACTUAL ROUTING MUST BE COORDINATED WITH FIELD CONDITIONS AND ADJUSTED AS REQUIRED.

17. UNLESS OTHERWISE INDICATED, ALL RACEWAYS SHALL BE INSTALLED CONCEALED IN FINISHED AREAS.

18. RUN EXPOSED RACEWAYS PARALLEL TO OR AT RIGHT ANGELS TO WALLS. ALL EXPOSED CONDUITS SHALL BE RUN AT OR CLOSE TO CEILING LEVEL U.O.N.

19. MINIMUM CONDUCTOR SIZE, UNLESS OTHERWISE NOTED, SHALL BE #12 AWG FOR ALL BRANCH CIRCUIT RUNS UP TO THE FIRST OUTLET UP TO 100 FEET; OVER 100 FEET, #10 AWG; OVER 150 FEET, #8 AWG; AND INCREASE CONDUIT SIZE TO SUIT, QUANTITY OF CONDUCTORS SHALL BE AS REQUIRED.

20. FURNISH FISH WIRE IN EACH RACEWAY RUN IN WHICH WIRING IS NOT INSTALLED.

21. WIRING TO AND FROM AN ITEM SHALL BE SIZED THE SAME UNLESS OTHERWISE REQUIRED.

22. PIPE SLEEVES SHALL BE PROVIDED WHERE CONDUITS ARE ROUTED THROUGH FOUNDATION WALLS. PIPE SLEEVES SHALL BE GROUTED IN WALLS. SEALANT SHALL BE APPLIED AROUND THE CONDUIT IN THE SLEEVE IN ORDER TO PREVENT INGRESS OF MOISTURE. THE WALL PENETRATION SHALL BE COMPLETELY WATERPROOFED.

23. PROVIDE TYPED DIRECTORY FOR EACH PANELBOARD.

24. COORDINATE FIRE ALARM CONNECTION WITH FIRE ALARM VENDOR.

25. INTERCONNECT DEVICES/FIXTURES WITH SAME CIRCUIT NUMBER WITH REQUIRED WIRE AND CONDUIT AND ENERGIZE FROM CIRCUIT IN ASSOCIATED PANEL.

26. PROVIDE ALL REQUIRED PULL, JUNCTION, OUTLET BOXES AND TROUGHS.

27. COVERS OF JUNCTION AND PULL BOXES SHALL BE ACCESSIBLE.

28. PROVIDE BACKBOXES FOR ALL DEVICES, EQUIPMENT, ETC.

29. IN COMMON PULL BOXES PROVIDE METAL PARTITIONS TO SEPARATE THE FOLLOWING WIRE TYPES FROM EACH OTHER:
    - POWER
    - CONTROL AND INDICATING
    - COMMUNICATION

30. PROVIDE BLANK COVER PLATES OVER ALL UNUSED OPENINGS IN PANELBOARDS, PULL AND JUNCTION BOXES AND TROUGHS.

31. INSTALL AND CONNECT EVERY STARTER AND VARIABLE FREQUENCY DRIVE FURNISHED BY OTHER TRADES/VENDORS ON THIS PROJECT.

32. RATING OF DISCONNECT SWITCHES TO MATCH OVERCURRENT PROTECTIVE DEVICE U.O.N.

33. EXIT LIGHTS, EMERGENCY BATTERY PACKS & NIGHT LIGHTS SHALL NOT BE SWITCHED U.O.N. CONNECT TO UNSWITCHED LEG OF ASSOCIATED CIRCUIT. PROVIDE CODE COMPLIANT EMERGENCY BATTERY PACKS.

34. PROVIDE ALL NECESSARY TEMPORARY AND INTERIM ELECTRICAL POWER WORK (PANELS, DISCONNECT SWITCHES, WIRE, CONDUITS, BREAKERS, CONNECTIONS, FUSES, GENERATORS, FUEL, ETC.) REQUIRED TO INSTALL THE PERMANENT WORK FOR ALL TRADES.

35. LOCATE JUNCTION AND PULL BOXES TO BE CONCEALED IN FINISH SPACES. WHERE NECESSARY, REROUTE RACEWAYS OR MAKE OTHER ARRANGEMENTS FOR CONCEALMENT. PROVIDE PULL BOXES WHERE NECESSARY FOR WIRE PULLING. COORDINATE ALL BOX LOCATIONS WITH OTHER TRADES. COVERS OF JUNCTION AND PULL BOXES SHALL BE ACCESSIBLE.

36. UPON COMPLETION OF ALL ELECTRICAL WORK, ELECTRICAL CONTRACTOR SHALL ADJUST AND TEST ALL CIRCUITS, OUTLETS, SWITCHES, LIGHTS, MOTORS AND ANY OTHER ELECTRICAL ITEMS INSTALLED. ANY DEFECTIVE ITEMS SHALL BE IMMEDIATELY REPAIRED OR REPLACED WITH NEW EQUIPMENT OR MATERIALS AND THAT PORTION OF THE SYSTEM SHALL BE RETESTED. ALL SUCH REMEDIAL WORK SHALL BE PROVIDED AT NO ADDITIONAL COST TO THE OWNER.

37. UPON COMPLETION OF ALL ELECTRICAL WORK, ELECTRICAL CONTRACTOR SHALL BALANCE ALL PANELBOARDS AFFECTED TO WITHIN 10% DEVIATION BETWEEN PHASES.

38. AFTER COMPLETION OF WORK, CLEAN UP ALL RESULTANT DEBRIS AND REMOVE FROM THE SITE.

39. PROVIDE GFI TYPE PROTECTION FOR ANY DEVICE WITHIN 6' OF WATER OR LIQUIDS.

40. THE CONTRACTOR SHALL TAG EACH AND EVERY PANELBOARD, DISCONNECT SWITCH MOTOR STARTER OR CONTROLLER AND CONTROL DEVICE INSTALLED OR WIRED UNDER THIS CONTRACT, TAGGING SHALL BE BY MEANS OF ENGRAVED PHENOLIC NAMEPLATES (WHITE LETTERING, BLACK BACKGROUND). LABEL ALL OUTLETS WITH CIRCUIT NUMBERS.

41. THE ELECTRICAL CONTRACTOR SHALL COMPLY WITH THE FOLLOWING CODES AND STANDARDS:
    - A. UNDERWRITERS LABORATORIES, INC. (UL)
    - B. BUILDING CODE
    - C. NATIONAL ELECTRICAL CODE WITH LOCAL AMENDMENTS
    - D. OCCUPATIONAL SAFETY AND HEALTH ACT (OSHA)
    - E. LOCAL ENERGY CONSERVATION CONSTRUCTION CODE
    - F. AMERICAN DISABILITIES ACT (ADA)
    - G. ALL LOCAL JURISDICTION DIRECTIVES AND REQUIREMENTS.

42. REFER TO MECHANICAL DRAWINGS FOR EXACT QUANTITIES AND LOCATIONS FOR VAV BOXES, CONTROL VOLUME BOXES, DAMPERS, FIRE SMOKE DAMPERS, ETC. COORDINATE EXACT CONNECTION POINTS WITH HVAC CONTRACTOR.

43. ALL PANELS, SWITCHBOARDS, SWITCHGEAR AND DISCONNECT BUSSES SHALL BE COPPER. ALL WIRING SHALL BE COPPER. ALUMINUM BUSSES AND WIRING ARE NOT PERMITTED.

44. ELECTRICAL CONNECTIONS TO ALL VIBRATION-ISOLATED EQUIPMENT INCLUDING PUMPS, FANS SHOULD BE MADE WITH FLEXIBLE CONDUIT, NOT LESS THAN 2' IN LENGTH AND INSTALLED IN A COMPLETE 360° LOOP.

45. ALL WIRING TO BE IN CONDUIT/EMT AND ALL CONDUIT TO BE SUPPORTED BY STANDOFF, NOT WIRED CEILING SUPPORTS.

46. ALL ELECTRICAL BOXES TO BE 4"X4".

47. AT CLOSE OUT OF JOB, UNDERWRITERS CERTIFICATE IS TO BE PROVIDED TO PROPERTY MANAGER/ LANDLORD.

48. ALL WORK SHALL COMPLY WITH BUILDING RULES AND REGULATIONS.

ABBREVIATIONS

A	AMPERE
ACT	ACTIVE
A/C	AIR CONDITIONING
AFF	ABOVE FINISH FLOOR
ARCH	ARCHITECT
BLDG	BUILDING
C, CDT	CONDUIT
CB	CIRCUIT BREAKER
CLG	CEILING
DN	DOWN
DP	DISTRIBUTION PANEL
DWG	DRAWING
E	EXISTING TO REMAIN
EC	EMPTY CONDUIT
EM	EMERGENCY
ENCL	ENCLOSURE
ER	EXISTING TO BE RELOCATED
ENGR	ENGINEER
EQUIP	EQUIPMENT
FBO	FURNISHED BY OTHERS
FIXT	FIXTURE
FL	FLOOR
FLA	FULL LOAD AMPS
FLUOR	FLUORESCENT
FRIG	REFRIGERATOR
G, GND	GROUND
GALV	GALVANIZED
GC	GENERAL CONTRACTOR
GFI	GROUND FAULT INTERRUPTER
H.CLG	HUNG CEILING
HVAC	HEATING, VENTILATING & AIR CONDITIONING
INCL	INCLUDING
I	INSTALLATION
LP	LIGHTING PANEL
LS	LIFE SAFETY
MANF	MANUFACTURER
MAX	MAXIMUM
MECH	MECHANICAL
MTD	MOUNTED
N	NEW
NIC	NOT IN CONTRACT
NO.	NUMBER
NTS	NOT TO SCALE
OC	ON CENTER
REQ'D	REQUIRED
SCHED	SCHEDULE
SP	SPARE
SPEC	SPECIFICATION
SW	SWITCH
TEL	TELEPHONE
TYP	TYPICAL
UON	UNLESS OTHERWISE NOTED
UP	UTILITY PANEL
V	VOLT
W	WIRE
W/	WITH
WP	WATERPROOF

ELECTRICAL DRAWING LIST

DRAWING NO.	DRAWING TITLE
E-001	ELECTRICAL NOTES, SYMBOLS LIST AND ABBREVIATIONS
E-100	ELECTRICAL CELLAR, 1ST FL. DEMOLITION AND SITE POWER PART PLANS
E-200	ELECTRICAL 1ST FL. POWER PART PLANS
E-201	ELECTRICAL ROOF POWER PLAN
E-300	ELECTRICAL CELLAR LIGHTING PLAN
E-301	ELECTRICAL 1ST FL. LIGHTING PART PLANS
E-500	ELECTRICAL BLOCK RISER DIAGRAM
E-600	ELECTRICAL PANEL SCHEDULES I
E-601	ELECTRICAL PANEL SCHEDULES II
E-700	ELECTRICAL DETAILS I
E-701	ELECTRICAL DETAILS II
E-702	ELECTRICAL DETAILS III
E-800	ELECTRICAL SPECIFICATIONS I
E-801	ELECTRICAL SPECIFICATIONS II

ELECTRICAL SYMBOL LIST

J / J	JUNCTION BOX
J	JB WITH WIRE AND CONDUIT FOR FINAL CONNECTION TO EQPT.
J / $T	JUNCTION BOX AND THERMAL DISCONNECT SWITCH
$G	ELECTRONIC LIGHT SWITCH 'G' DENOTES CONTROL ZONE.
$G 3	ELECTRONIC 3-WAY LIGHT SWITCH, 20A RATED 'G' DENOTES CONTROL ZONE.
$	DIMMER LIGHT SWITCH COORDINATE EXACT REQUIREMENTS WITH LIGHT FIXTURE MANUFACTURER
	POWER PANEL
1	PLAN KEY NOTE
	WALL MOUNTED DUPLEX OUTLET
	WALL MOUNTED DEDICATED CIRCUIT SIMPLEX OUTLET
	WALL MOUNTED QUADPLEX OUTLET
	FLOOR MOUNTED QUADPLEX OUTLET
	WALL MOUNTED TELEPHONE AND DATA OUTLET
1	DISCONNECT SWITCH
1	FUSED DISCONNECT SWITCH
	BUG EYE EMERGENCY LIGHT WITH AN INTERNAL BATTERY PACK. LIGHTOLIER OR APPROVED EQUAL

FIFIELD |PIAKER |ELMAN
ARCHITECTS, PC

740 Broadway, Suite 601
New York, NY 10003
tel 212 979 9272
www.fpe-architects.com

NO USE, REPRODUCTION OR DISSEMINATION MAY BE MADE OF THIS DRAWING & CONCEPTS SET FORTH HEREON WITHOUT THE PRIOR WRITTEN CONSENT OF

FIFIELD PIAKER ELMAN ARCHITECTS P.C. COPYRIGHT © 2023

MEP CONSULTANT:
AVCON ENGINEERING PC

AVCON ENGINEERING
580 8TH AVE, 14TH FLOOR
NEW YORK, NY 10018
PH: (646) 572-0488

Project:
CHABAD DOWNTOWN

30 WALL STREET
BINGHAMTON, NY 13901

No:	Description:	Date:
06	100% CD SET / BID AND PERMIT	08/19/25
05	100% REVIEW SET	06/16/25
04	95% CD SET	01/20/25
03	80% COORDINATION SET	08/07/24
02	ISSUED FOR PROGRESS	12/01/23
01	ISSUED FOR REVIEW	10/05/23

Revisions:

Job No: 10015
Scale: AS SHOWN
Date: 10/02/23
Drawn: TL

Sheet Title:
ELECTRICAL NOTES, SYMBOLS & ABBREVIATIONS

Drawing No.:
E-001

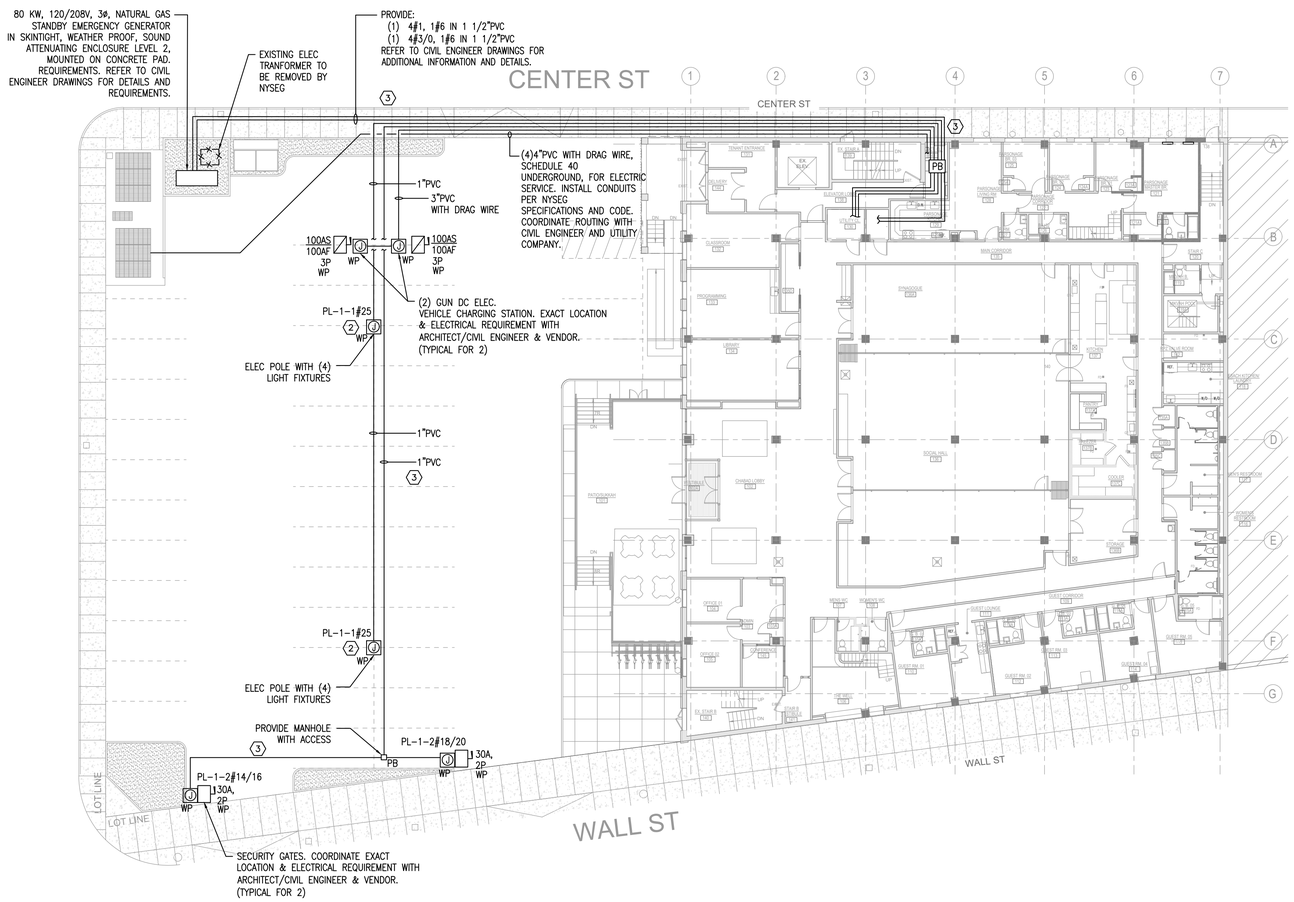

1 SITE POWER PLAN

1/16" = 1'-0"

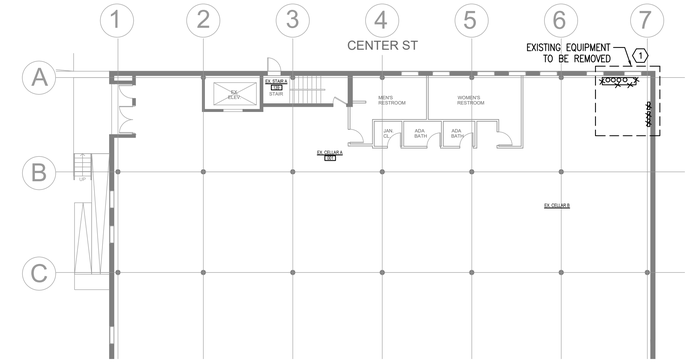

2 CELLAR DEMOLITION POWER PLAN

1/16" = 1'-0"

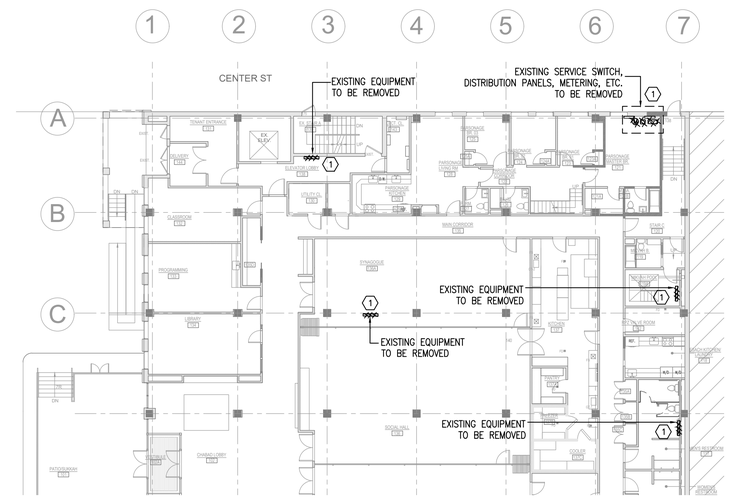

3 1ST FL. DEMOLITION POWER PLAN

1/16" = 1'-0"

PART PLAN KEYNOTES

1. REMOVE EQUIPMENT SCHEDULED FOR DEMOLITION IN ITS ENTIRETY. REMOVE CONDUITS, RISERS, SUPPORTS, FEEDERS AND BRANCH CONDUCTORS ASSOCIATED WITH EQUIPMENT BEING REMOVED. REPAIR CORE SLAB HOLES AS NECESSARY. COORDINATE REMOVAL TO MAINTAIN POWER TO THE BUILDING AT ALL TIMES. PROVIDE TEMPORARY SERVICE IF NECESSARY TO MAINTAIN POWER.
2. PROVIDE (1) POWER CIRCUIT FOR PARKING LIGHTING. COORDINATE LOCATION WITH ARCHITECT AND CIVIL ENGINEER.
3. UNDERGROUND WIRING INSTALLED IN PVC CONDUIT SHALL BE BURIED MINIMUM 24" BELOW GRADE. LAST 24" OF PVC CONDUITS BEFORE EMERGING ABOVE GRADE SHALL TRANSITION TO RIGID, THREADED, GALVANIZED STEEL (RGS) WITH PVC COATING. ALL UNDERGROUND FEEDERS AND BRANCH CIRCUITS IN NON-METALLIC CONDUIT SHALL INCLUDE GROUND CONDUCTOR, UNLESS OTHERWISE NOTED. SCHEDULE 40 PVC CONDUIT SHALL BE USED FOR UNDER GROUND WIRING.

FIFIELD |PIAKER |ELMAN
ARCHITECTS, PC

740 Broadway, Suite 601
New York, NY 10003
tel 212 979 9272
www.fpe-architects.com

NO USE, REPRODUCTION OR DISSEMINATION MAY BE MADE OF THIS DRAWING & CONCEPTS SET FORTH HEREON WITHOUT THE PRIOR WRITTEN CONSENT OF

FIFIELD PIAKER ELMAN ARCHITECTS P.C. COPYRIGHT © 2023

MEP CONSULTANT:
AVCON ENGINEERING PC

AVCON ENGINEERING
580 8TH AVE, 14TH FLOOR
NEW YORK, NY 10018
PH: (646) 572-0488

Project:
CHABAD DOWNTOWN

30 WALL STREET
BINGHAMTON, NY 13901

No:	Description:	Date:
06	100% CD SET / BID AND PERMIT	08/19/25
05	100% REVIEW SET	06/16/25
04	95% CD SET	01/20/25
03	80% COORDINATION SET	08/07/24
02	ISSUED FOR PROGRESS	12/01/23
01	ISSUED FOR REVIEW	10/05/23

Revisions:

Job No: 10015
Scale: AS SHOWN
Date: 10/02/23
Drawn: TL

Sheet Title:
ELECTRICAL CELLAR, 1ST FLOOR DEMOLITION & SITE POWER PLANS

Drawing No.:
E-100

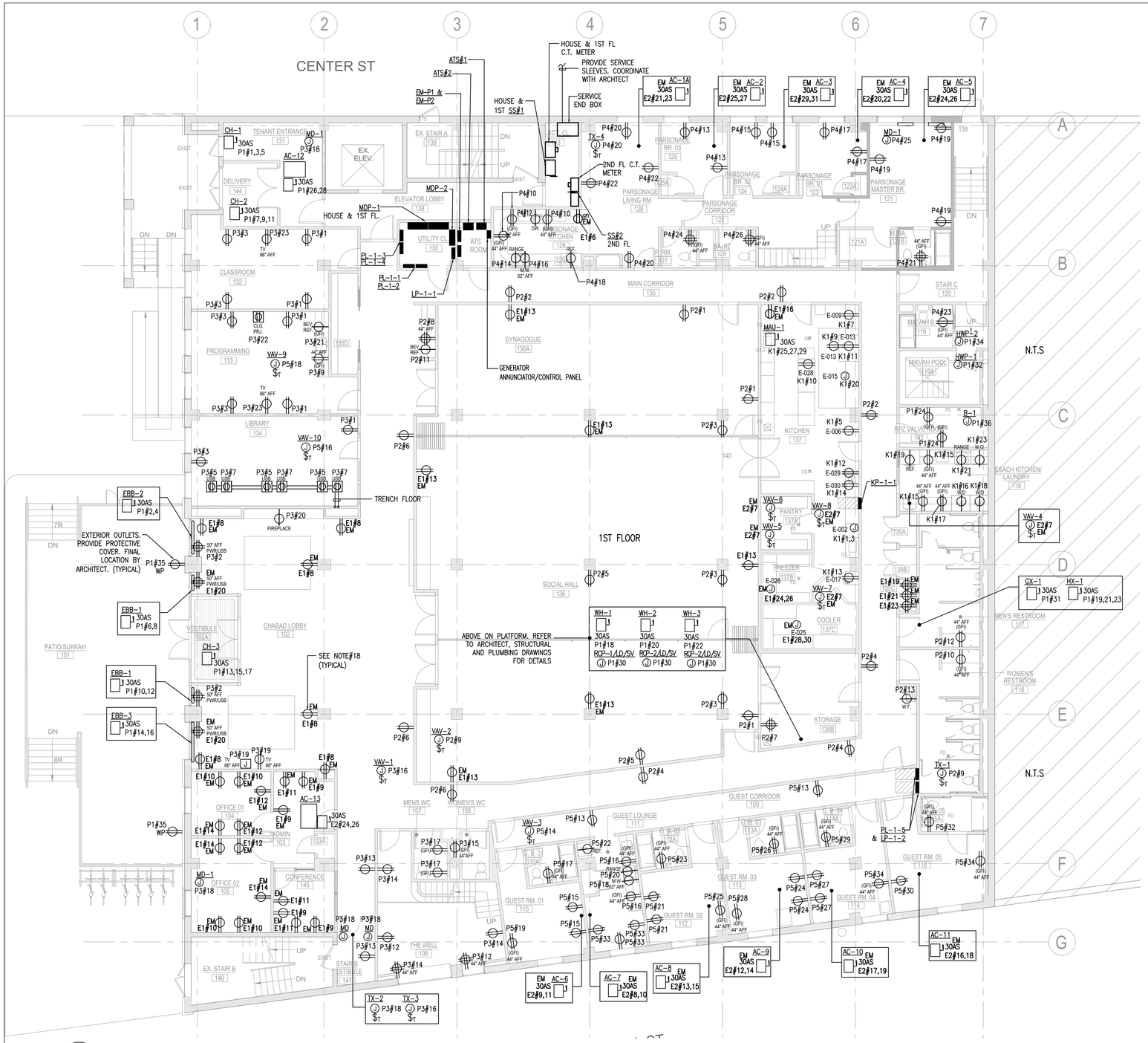

1 FIRST FLOOR POWER PLAN

1/8" = 1'-0"

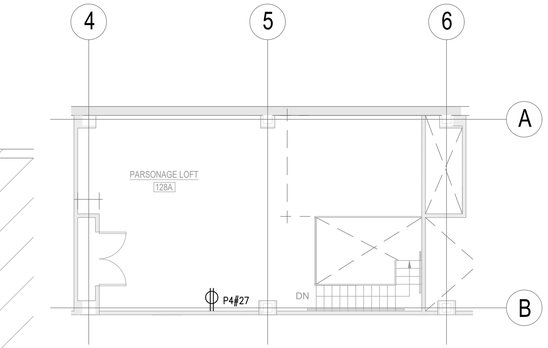

2 PARSONAGE LOFT PART PLAN

1/8" = 1'-0"

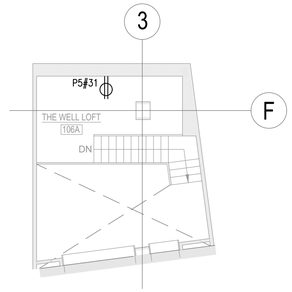

3 THE WELL LOFT PART PLAN

1/8" = 1'-0"

ELECTRICAL KITCHEN EQUIPMENT

MK.	QTY	CONNECTION CHARACTERISTICS AMPS	KW	HP	VOLTS	PH	JBOX	RCPT	DESCRIPTION	REMARKS
E-002	1	48.3	–		208	1	X		DISHWASHER	
E-006	1	14.0	–		120	1		X	PROOFER CABINET, MOBILE	
E-009	1	5.6	–		120	1		X	REACH-IN REFRIGERATOR	
E-013	2	8.0	–		120	1		X	CONVECTION OVEN, GAS	
E-015	1	–	–		–	–	X		KX-1	
E-017	1	7.1	–		120	1		X	ICE MAKER WITH BIN	
E-025	1	–	–	3/4	208	1	X		WALK-IN COOLER	
E-026	1	–	–	2	208	1	X		WALK-IN FREEZER	
E-028	1	7.0	–		120	1		X	FOOD PROCESSOR	
E-029	1	3.0	–		120	1		X	FOOD SLICER	
E-030	1	15.0	–		120	1		X	FOOD BLENDER	

GENERAL POWER REQUIREMENTS

1. EXACT LOCATION OF RECEPTACLES, & EQUIPMENT IN-FEED, AND CEILING LOCATIONS & QUANTITIES SHALL BE VERIFIED WITH ARCHITECT, INTERIOR DESIGNER & FIELD CONDITIONS.
2. REFER TO ARCHITECTURAL, LIGHTING DESIGNER DRAWINGS FOR FIXTURE SCHEDULES, SYMBOL LIST, EXACT FIXTURE LOCATION.
3. ELECTRICAL WHIPS/FLEXIBLE CONNECTIONS SHALL BE A MAXIMUM LENGTH OF 18".
4. CONTRACTOR SHALL PROVIDE AS-BUILT DRAWINGS INDICATING ACTUAL BRANCH CIRCUITING AND OUTLET LOCATION UPON COMPLETION OF WORK.
5. PROVIDE CONDUITS, WIRES, METAL-CLAD CABLE WITH GROUND WIRE AND BOXES REQUIRED FOR COMPLETE SYSTEM INSTALLATION.
6. WIRING FOR BRANCH CIRCUIT HOMERUNS SHALL BE:
   #12 WIRE IF THE LENGTH DOESN'T EXCEED 80FT;
   #10 WIRE IF MORE THAN 80FT.
7. ALL DEVICES ARE NEW UNLESS OTHERWISE NOTED. ALL COVER-PLATE COVERS TO MATCH WALL COLOR AND/SHALL COORDINATE WITH ARCHITECTURAL AND INTERIOR DESIGNER DRAWINGS.
8. CIRCUIT BREAKER SHALL NOT BE LOADED MORE THAN 80% OF THEIR RATED AMPERE CAPACITY.
9. SEE PANEL SCHEDULES FOR MORE INFORMATION.
10. PROVIDE 1 1/4"CONDUIT STUB-UPS AND BACK BOXES FOR ALL TEL/DATA RECEPTACLES SHOWN. TERMINATE STUB UPS 6" ABOVE FINISHED PARTITIONS/WALL. PROVIDE DRAG WIRE IN CONDUIT (TYPICAL).
11. MAINTAIN CONTINUITY FOR EXISTING POWER LANDLORD N.I.C. AREAS TO REMAIN.
12. ALL HOME RUNS TO PANELS SHALL BE IN EMT OR MC OR AL CABLES.
13. ALL EXPOSED WIRING IN CEILINGS OR INTERIOR SHALL BE IN EMT.
14. ALL WIRING IN LANDLORD DEMISING WALLS SHALL BE IN EMT.
15. ALL EQUIPMENT, DEVICES, AND FIXTURES SHALL BE GROUNDED IN COMPLIANCE WITH NEC AND UL REQUIREMENTS.
16. SEE MECHANICAL DRAWINGS FOR EXACT EQUIPMENT LOCATION AND REQUIREMENTS.
17. SEE PLUMBING DRAWINGS FOR EXACT EQUIPMENT LOCATION AND REQUIREMENTS.
18. IDENTIFY SELECTED RECEPTACLE 'EM' ON EMERGENCY POWER. COORDINATE FINISH COLOR RE/AND LABELING WITH ARCHITECT.
19. ALL RECEPTACLES IN PANTRY/KITCHEN SHALL BE 'GFI' TYPE.
20. CONTRACTOR TO REFER TO ARCHITECTURAL AND/OR KITCHEN CONSULTANT DRAWINGS FOR FINAL INFORMATION REGARDING ALL KITCHEN EQUIPMENT, CONNECTION/TERMINATION REQUIREMENTS AND THEIR RESPECTIVE APPURTENANCES TO ENSURE A FULLY FUNCTIONAL INSTALLATION.
21. ALL EQUIPMENT LOCATED UNDER COOKING EXHAUST HOOD TO BE PROVIDED WITH SHUNT TRIP BREAKERS

CIRCUIT DESIGNATION:

XX # X
- Y — PANEL DESIGNATION
- Y — CIRCUIT NUMBER IN RESPECTIVE PANEL INDICATED

P1 – PANEL PL-1-1
P2 – PANEL PL-1-2
P3 – PANEL PL-1-3
P4 – PANEL PL-1-4
P5 – PANEL PL-1-5
L1 – PANEL LP-1-1
P5 – PANEL PL-1-5
K1 – PANEL KP-1-1
EQ1 – PANEL PL-EQ1
E1 – PANEL EM-P1
E2 – PANEL EM-P2

FIFIELD |PIAKER |ELMAN
ARCHITECTS, PC

740 Broadway, Suite 601
New York, NY 10003
tel 212 979 9272
www.fpe-architects.com

NO USE, REPRODUCTION OR DISSEMINATION MAY BE MADE OF THIS DRAWING & CONCEPTS SET FORTH HEREON WITHOUT THE PRIOR WRITTEN CONSENT OF

FIFIELD PIAKER ELMAN ARCHITECTS P.C. COPYRIGHT © 2023

MEP CONSULTANT:
AVCON ENGINEERING PC

AVCON ENGINEERING
580 8TH AVE, 14TH FLOOR
NEW YORK, NY 10018
PH: (646) 572-0488

Project:
CHABAD DOWNTOWN

30 WALL STREET
BINGHAMTON, NY 13901

No:	Description:	Date:
06	100% CD SET / BID AND PERMIT	08/19/25
05	100% REVIEW SET	06/16/25
04	95% CD SET	01/20/25
03	80% COORDINATION SET	08/07/24
02	ISSUED FOR PROGRESS	12/01/23
01	ISSUED FOR REVIEW	10/05/23

Revisions:

Job No: 10015
Scale: AS SHOWN
Date: 10/02/23
Drawn: TL

Sheet Title:
ELECTRICAL FIRST FLOOR AND PART POWER PLANS

Drawing No.:
E-200

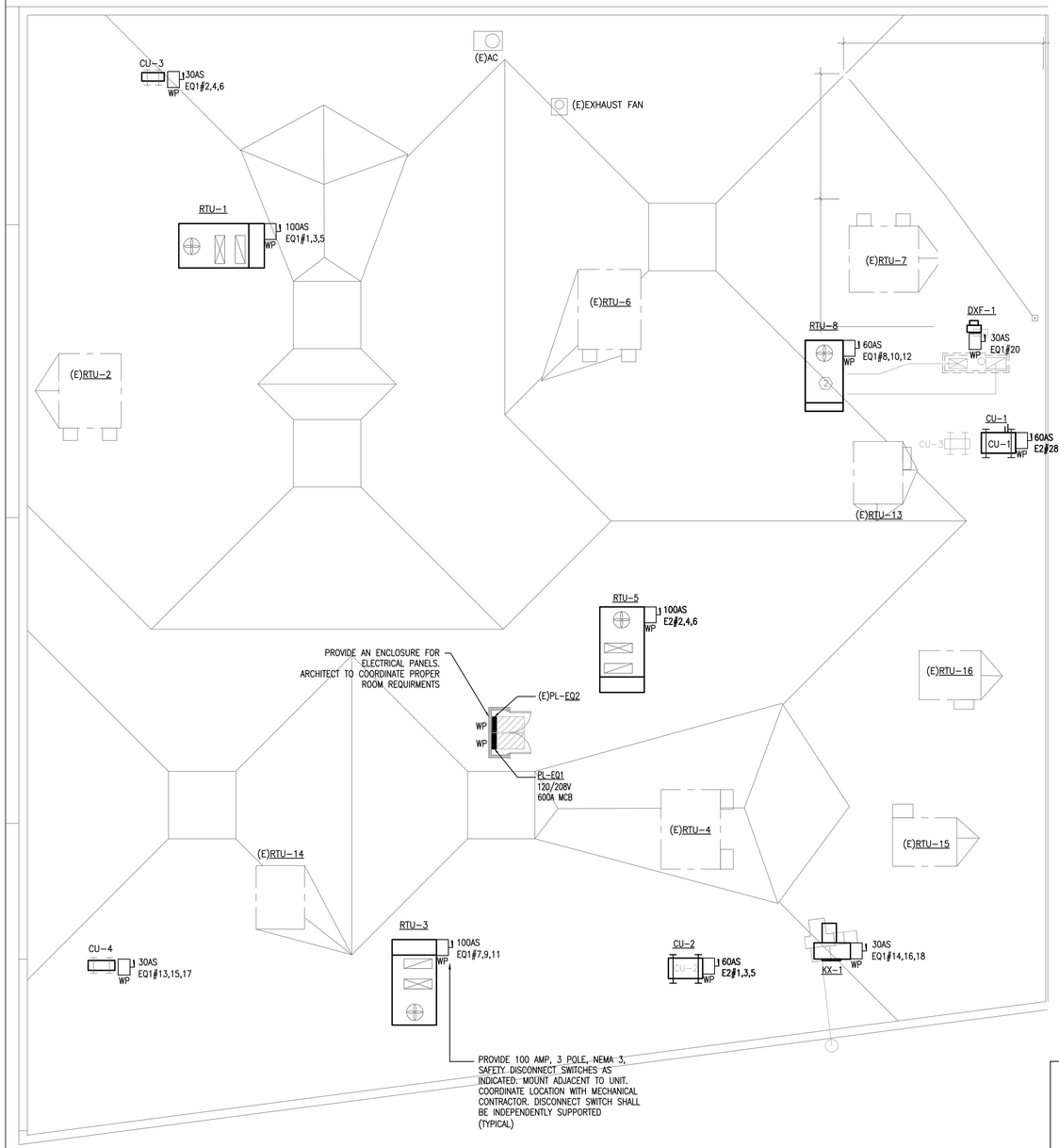

CIRCUIT DESIGNATION:

XX # X

X — CIRCUIT NUMBER IN RESPECTIVE PANEL INDICATED

XX — PANEL DESIGNATION

EQ1 – PANEL PL-EQ1

E2 – PANEL EM-P2

1 ROOF POWER PLAN

1/8" = 1'-0"

FIFIELD | PIAKER | ELMAN
ARCHITECTS, PC

740 Broadway, Suite 601
New York, NY 10003
tel 212 979 9272
www.fpe-architects.com

NO USE, REPRODUCTION OR DISSEMINATION MAY BE MADE OF THIS DRAWING & CONCEPTS SET FORTH HEREON WITHOUT THE PRIOR WRITTEN CONSENT OF

FIFIELD PIAKER ELMAN ARCHITECTS P.C. COPYRIGHT © 2023

MEP CONSULTANT:
AVCON ENGINEERING PC

AVCON ENGINEERING
580 8TH AVE, 14TH FLOOR
NEW YORK, NY 10018
PH: (646) 572-0488

Project:
CHABAD DOWNTOWN

30 WALL STREET
BINGHAMTON, NY 13901

No:	Description:	Date:
06	100% CD SET / BID AND PERMIT	08/19/25
05	100% REVIEW SET	06/16/25
04	95% CD SET	01/20/25
03	80% COORDINATION SET	08/07/24
02	ISSUED FOR PROGRESS	12/01/23
01	ISSUED FOR REVIEW	10/05/23

Revisions:

Job No: 10015
Scale: AS SHOWN
Date: 10/02/23
Drawn: TL

Sheet Title:
ELECTRICAL ROOF POWER PLAN

Drawing No.:
E-201

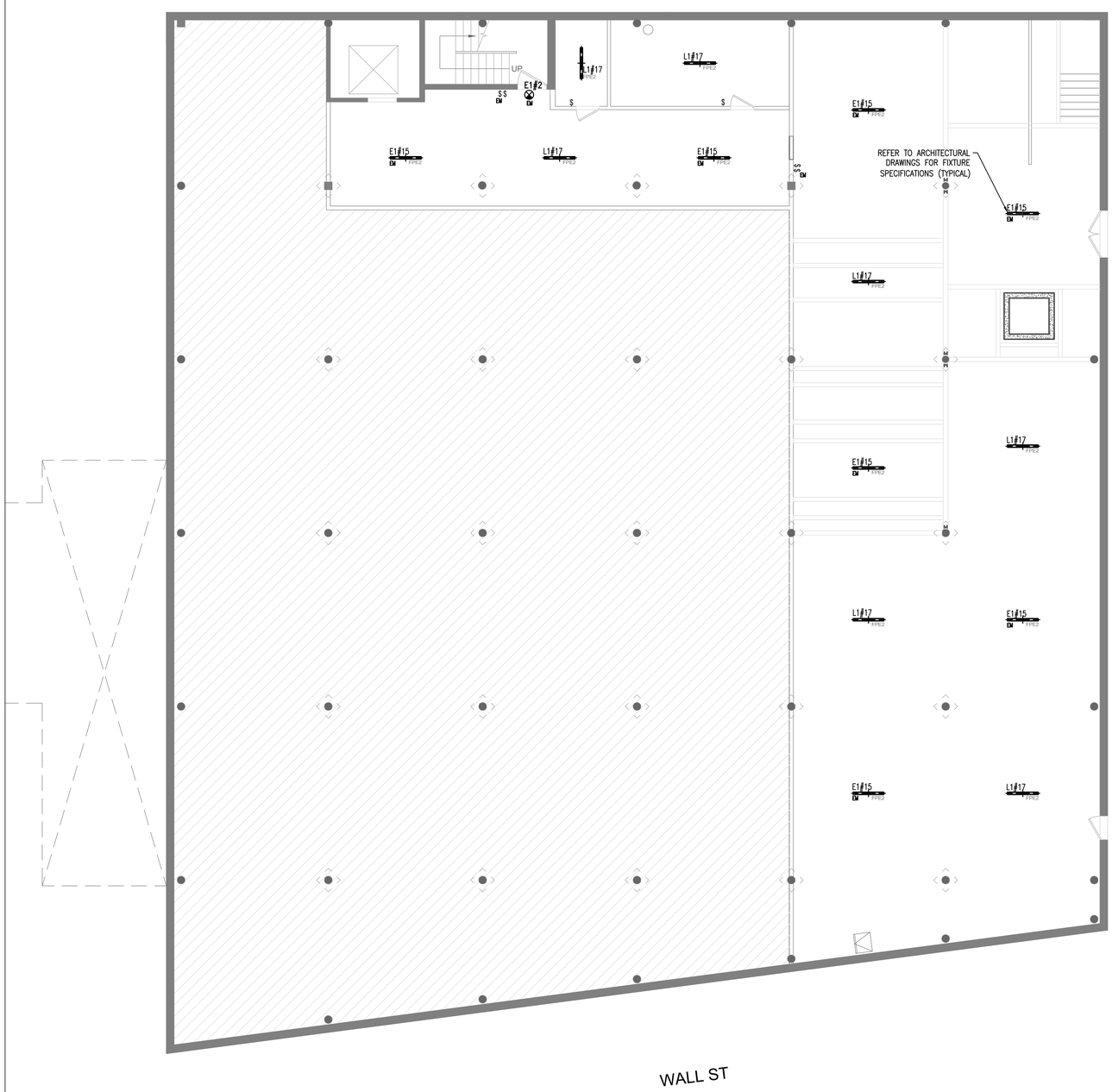

1 CELLAR LIGHTING PLAN

1/8" = 1'-0"

LIGHTING GENERAL NOTES

1. CONTRACTOR SHALL UTILIZE EXISTING CIRCUITS THAT PREVIOUSLY SERVED THE AREA OF WORK. CONTRACTOR SHALL VERIFY EXISTING CIRCUIT LOAD, CIRCUIT BREAKERS SHALL NOT EXCEED 80% OF THE BREAKER'S NOMINAL VALUE. USE SPARE 15A/1P OR 20A/1P CIRCUIT BREAKERS IN THE NEW PANELS SERVING THE AREA.
2. REFER TO ARCHITECTURAL DRAWINGS FOR LIGHTING FIXTURE SCHEDULES, SYMBOL LIST, AND EXACT FIXTURE LOCATIONS.
3. THE ELECTRICAL CONTRACTOR SHALL PROVIDE LABELING FOR ALL NEW PANELS AND SHALL RE-LABEL ALL EXISTING PANELS AND CIRCUIT NUMBERS.
4. ELECTRICAL CONTRACTOR SHALL INSTALL ALL CONDUIT, WIRING, JUNCTION BOXES & FLEXIBLE FINAL CONNECTIONS AS REQUIRED TO MEET NATIONAL ELECTRICAL CODE.
5. ALL FIXTURE LOCATIONS AND HEIGHTS TO BE COORDINATED WITH ARCHITECT. ALL DEVICE FINISHES TO BE COORDINATED WITH ARCHITECT.
6. MAINTAIN CONTINUITY FOR EXISTING LIGHTING IN AREA OF WORK.
7. REPROGRAM BREAKERS PER PANEL SCHEDULE AS REQUIRED AND COORDINATE WITH BASE BUILDING ENGINEER.
8. CONTRACTOR IS RESPONSIBLE TO TRACE, IDENTIFY AND VERIFY CIRCUITS PRESENTLY SERVING THE AREA OF WORK. EXISTING CIRCUITS ARE TO REMOVE UNLESS VERIFIED UN USED IN THE FIELD AFTER DEMOLITION.
9. LIGHTING PLAN SHOWS NEW FIXTURE LOCATIONS. FOR ADDITIONAL INFORMATION REGARDING LIGHTING FIXTURES RELOCATIONS, REFER TO ARCHITECTURAL DRAWINGS.
10. WIRING FOR LIGHTING BRANCH CIRCUIT HOMERUNS SHALL BE:
    #12 WIRE IF THE LENGTH DOESN'T EXCEED 80FT
    #10 WIRE IF MORE THAN 80FT.
11. EMERGENCY BACK OF HOUSE LIGHTING FIXTURES AND EXIT SIGNS SHALL BE CONNECTED TO NEW EMERGENCY PANEL.

CIRCUIT DESIGNATION:

XX # X
- Y — PANEL DESIGNATION
- Y — CIRCUIT NUMBER IN RESPECTIVE PANEL INDICATED

P1 – PANEL PL-1-1
P2 – PANEL PL-1-2
P3 – PANEL PL-1-3
P4 – PANEL PL-1-4
P5 – PANEL PL-1-5
K1 – PANEL KP-1-1
EQ1 – PANEL PL-EQ1
E1 – PANEL EM-P1
E2 – PANEL EM-P2

FIFIELD |PIAKER |ELMAN
ARCHITECTS, PC

740 Broadway, Suite 601
New York, NY 10003
tel 212 979 9272
www.fpe-architects.com

NO USE, REPRODUCTION OR DISSEMINATION MAY BE MADE OF THIS DRAWING & CONCEPTS SET FORTH HEREON WITHOUT THE PRIOR WRITTEN CONSENT OF

FIFIELD PIAKER ELMAN ARCHITECTS P.C. COPYRIGHT © 2023

MEP CONSULTANT:
AVCON ENGINEERING PC

AVCON ENGINEERING
580 8TH AVE, 14TH FLOOR
NEW YORK, NY 10018
PH: (646) 572-0488

Project:
CHABAD DOWNTOWN

30 WALL STREET
BINGHAMTON, NY 13901

No:	Description:	Date:
06	100% CD SET / BID AND PERMIT	08/19/25
05	100% REVIEW SET	06/16/25
04	95% CD SET	01/20/25
03	80% COORDINATION SET	08/07/24
02	ISSUED FOR PROGRESS	12/01/23
01	ISSUED FOR REVIEW	10/05/23

Revisions:

Job No: 10015
Scale: AS SHOWN
Date: 10/02/23
Drawn: TL

Sheet Title:
CELLAR ELECTRICAL LIGHTING PLAN

Drawing No.:
E-300

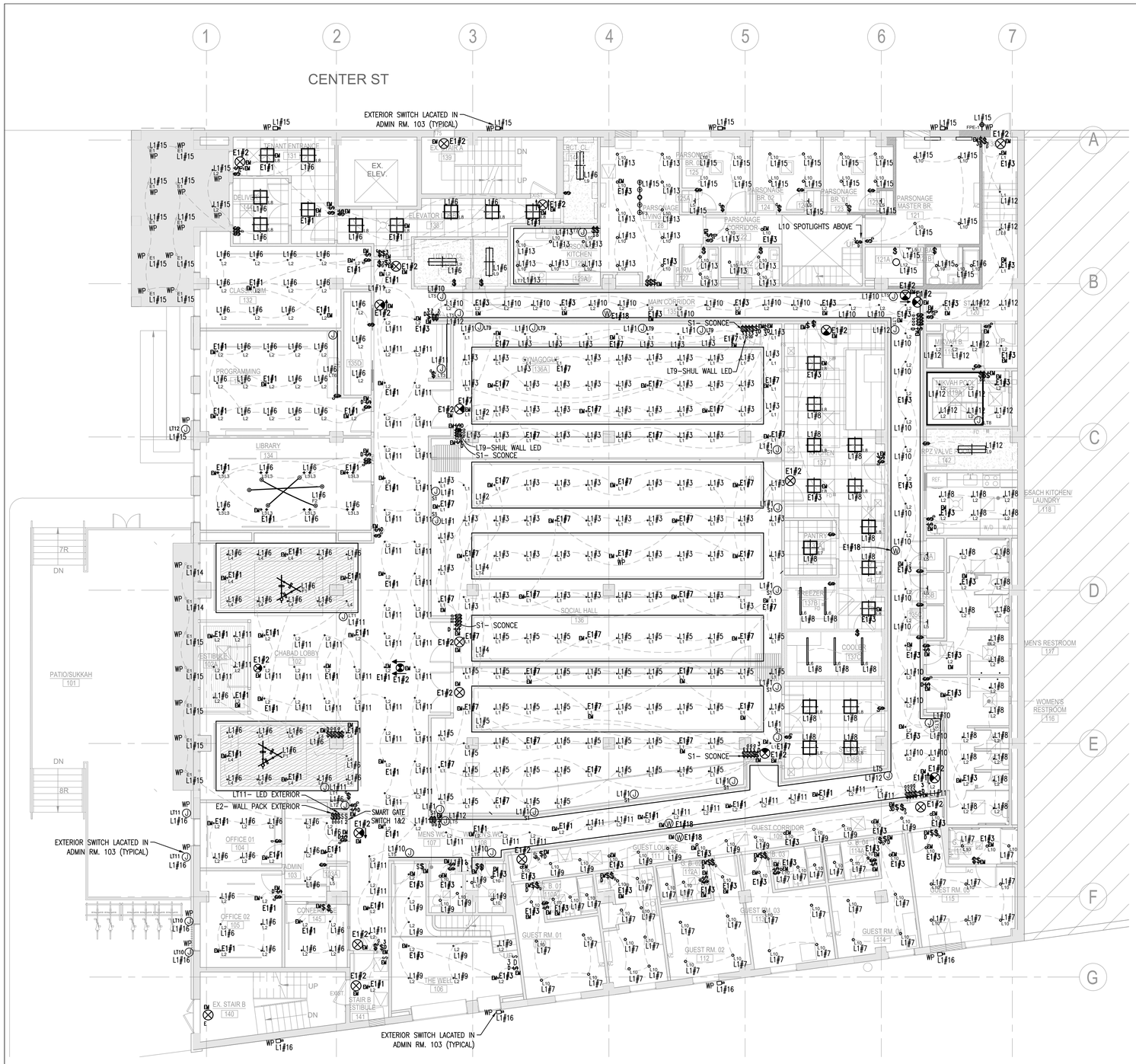

1 FIRST FLOOR LIGHTING PLAN

1/8" = 1'-0"

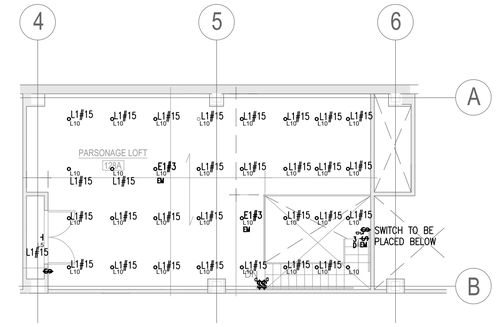

2 PARSONAGE LOFT PLAN

1/8" = 1'-0"

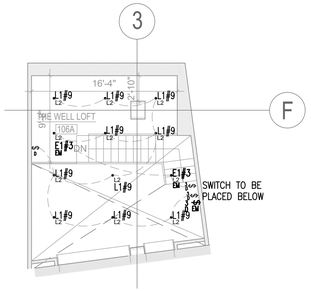

3 THE WELL LOFT PLAN

1/8" = 1'-0"

LIGHTING FIXTURE SCHEDULE

FIXTURE	FIXTURE DESCRIPTION	LOAD TYPE	TOTAL WATTAGE	VOLTAGE
L1	2" SPOTLIGHT	ELV/TRIAC 0-10V	25W	120V
L2	2" SPOTLIGHT	TRIAC OR 0-10V	20W	120V
L3	2" TRIMLESS SPOTLIGHT	ELV/TRIAC 0-10V	25W	120V
L4	2" SPOTLIGHT	TRIAC OR 0-10V	20W	120V
L5	24" LINEAR LED LIGHT	0-10V DIMMABLE	20W	120V
L6	48" VAPOR TIGHT LINEAR LIGHT	0-10V DIMMABLE	45W	120V
L7	2'x2' SURFACE LED PANEL	0-10V DIMMABLE	40W	120V
L8	2'x2' RECESSED BACKLIT LED PANEL	0-10V DIMMABLE	40W	120V
L9	1'x4' SURFACE LED PANEL	0-10V DIMMABLE	40W	120V
L10	4" RECESSED LED SPOTLIGHT	ELV/TRIAC 0-10V	12W	120V
L11	STEP LIGHT WITH PHOTOCELL	N/A	2W	120V
L12	12"SLIM SURFACE MOUNT (CLOSET)	TRIAC	22W	120V
E1	MODERNRAIL CHANDELIER (LOBBY)	TRIAC OR 0-10V	20W	120V
E2	EXTERIOR FLOOD LUMIN. LIGHT	ELV	36W	120V
EX	EXIT SIGN COMBOS	N/A	4W	120V
F1	MODERNRAIL CHANDELIER (LOBBY)	ELV/TRIAC	70W	24V
F2	CUSTOM 10', 12', 15' (LIBRARY)	DIMMABLE	45/55/68W	120V
F3	EXTRA LARGE LINEAR CHANDELIER	ELV/TRIAC	23W	120V
S1	DRESSER LONG GLASS ROD LIGHT	N/A	6W	120V
LT1	GEMINI LED TAPE – 24FT ROLL	ELV/TRIAC	4W/LF	120V
LT2	GEMINI LED TAPE – 15FT ROLL	ELV/TRIAC	4W/LF	120V
LT3	GEMINI LED TAPE – 24FT ROLL	ELV/TRIAC	4W/LF	12/24V
LT4	COVE COB 1.5 LED TAPE LIGHT	DIMMABLE	2W/LF	24V
LT5	COB 110 LED STRIP	DIMMABLE	4W/LF	120V
LT6	GEMINI LED TAPE – 15FT ROLL	ELV/TRIAC	4W/LF	120V
LT7	GEMINI LED TAPE – 15FT ROLL	ELV/TRIAC	4W/LF	12/24V
LT8	GEMINI LED TAPE – 15FT ROLL	ELV/TRIAC	4W/LF	12/24V
LT9	GEMINI LED TAPE – 15FT ROLL	ELV/TRIAC	4W/LF	12/24V
LT10	COB 110 LED STRIP	DIMMABLE	4W/LF	120V
LT11	COB 110 LED STRIP	DIMMABLE	4W/LF	120V
LT12	TBD			120V

CONTROLS LEGEND

ALL TO BE ON A SMART SWITCH SYSTEM

$_D$	SINGLE POLE DIMMER
$_D^3$	3 WAY DIMMER
$_S^3$	3 WAY SWITCH
$	SINGLE POLE SWITCH
W	WIFI RECEPTACLE
$_1$	SMART GATEWAY 1
$_2$	SMART GATEWAY 2

LIGHTING PLAN NOTES

1. CIRCUITS ARE DESIGNATED BY THE NUMBER SHOWN ADJACENT TO EACH LIGHTING FIXTURE OR JUNCTION BOX. WIRING IS SHOWN ONLY UNDER SPECIAL CIRCUMSTANCES. PROVIDE ALL CONDUIT, WIRE AND BOXES AS WELL AS CEILING OUTLETS AND WHIPS REQUIRED TO ENERGIZE LIGHTING FIXTURES AS SHOWN.
2. ALL LIGHTING FIXTURES SHALL BE INSTALLED IN SUCH WAY TO AVOID INTERFERENCE WITH MECHANICAL DIFFUSERS, HVAC DUCT WORK, SPRINKLERS, PUBLIC ACCESS SPEAKERS AND OTHER SYSTEMS' COMPONENTS.
3. ALL LIGHTING FIXTURES SHALL BE AS SPECIFIED BY THE ARCHITECT OR LIGHTING CONSULTANT. FOR EXACT LIGHTING FIXTURES LOCATIONS AND LIGHT FIXTURES SCHEDULE REFER TO ARCHITECTURAL DOCUMENTATION.
4. SEE ARCHITECTURAL/VENDOR SHOP'S DRAWINGS FOR EXACT LOCATION AND MOUNTING HEIGHTS OF ALL LIGHTING FIXTURES, SWITCHES, JUNCTION BOXES AND FOR LIGHTING FIXTURE SCHEDULE/CONTROLS. LIGHTING FIXTURE CUTS SHALL BE OBTAINED FROM ARCHITECT PRIOR TO INSTALLATION.
5. ELECTRICAL CONTRACTOR TO PROVIDE ALL NECESSARY CONNECTIONS FROM THE WALL AND FLOOR TO THE FIXTURES LOCATED AT MILLWORK. COORDINATE WITH MILLWORK CONTRACTOR.
6. CIRCUIT BREAKERS SHALL NOT BE LOADED MORE THAN 80% OF THEIR RATED AMPERE CAPACITY.
7. THE ELECTRICAL CONTRACTOR SHALL PROVIDE LABELING FOR ALL NEW PANELS AND CIRCUIT NUMBER.
8. ELECTRICAL CONTRACTOR SHALL INSTALL ALL CONDUIT, WIRING, JUNCTION BOXES & FLEXIBLE FINAL CONNECTIONS AS REQUIRED TO MEET NATIONAL ELECTRICAL CODE.
9. ALL DEVICES FINISHES TO BE COORDINATED WITH ARCHITECTS.
10. ALL LIGHT FIXTURES TO BE CONTROLLED WITH A LIGHTING CONTROL SYSTEM OR A METHOD LISTED IN THE ENERGY CODE.
11. CONTRACTOR TO COORDINATE FINAL LIGHTING SYSTEMS, CONTROLS AND ZONING WITH LIGHTING DESIGNER PRIOR TO PURCHASING THE DEVICES.
12. HOMERUNS TO LIGHTING FIXTURES IN OPEN AREAS (CORRIDORS AND MAIN ELEVATOR LOBBY NOT OFFICES OR INTERIOR ROOMS) SHALL BE WIRED VIA TIMECLOCK WITH BUILT IN LIGHTING RELAY LOCATED IN ELECTRICAL CLOSET.
13. LIGHTING FIXTURES IN EXISTING ELECTRICAL CLOSET TO BE CLEANED AND RELAMPED. PROVIDE NEW LIGHT SWITCH.

CIRCUIT DESIGNATION:

XX # X
Y Y
- CIRCUIT NUMBER IN RESPECTIVE PANEL INDICATED
- PANEL DESIGNATION

P1 – PANEL PL-1-1
P2 – PANEL PL-1-2
P3 – PANEL PL-1-3
P4 – PANEL PL-1-4
P5 – PANEL PL-1-5
L1 – PANEL LP-1-1
L2 – PANEL LP-1-2
K1 – PANEL KP-1-1
EQ1 – PANEL PL-EQ1
E1 – PANEL EM-P1
E2 – PANEL EM-P2

FIFIELD |PIAKER |ELMAN
ARCHITECTS, PC

740 Broadway, Suite 601
New York, NY 10003
tel 212 979 9272
www.fpe-architects.com

NO USE, REPRODUCTION OR DISSEMINATION MAY BE MADE OF THIS DRAWING & CONCEPTS SET FORTH HEREON WITHOUT THE PRIOR WRITTEN CONSENT OF

FIFIELD PIAKER ELMAN ARCHITECTS P.C. COPYRIGHT © 2023

MEP CONSULTANT:
AVCON ENGINEERING PC

AVCON ENGINEERING
580 8TH AVE, 14TH FLOOR
NEW YORK, NY 10018
PH: (646) 572-0488

Project:
CHABAD DOWNTOWN

30 WALL STREET
BINGHAMTON, NY 13901

No:	Description:	Date:
06	100% CD SET / BID AND PERMIT	08/19/25
05	100% REVIEW SET	06/16/25
04	95% CD SET	01/20/25
03	80% COORDINATION SET	08/07/24
02	ISSUED FOR PROGRESS	12/01/23
01	ISSUED FOR REVIEW	10/05/23

Revisions:

Job No: 10015
Scale: AS SHOWN
Date: 10/02/23
Drawn: TL

Sheet Title:
FIRST FLOOR ELECTRICAL LIGHTING PLAN

Drawing No.:
E-301

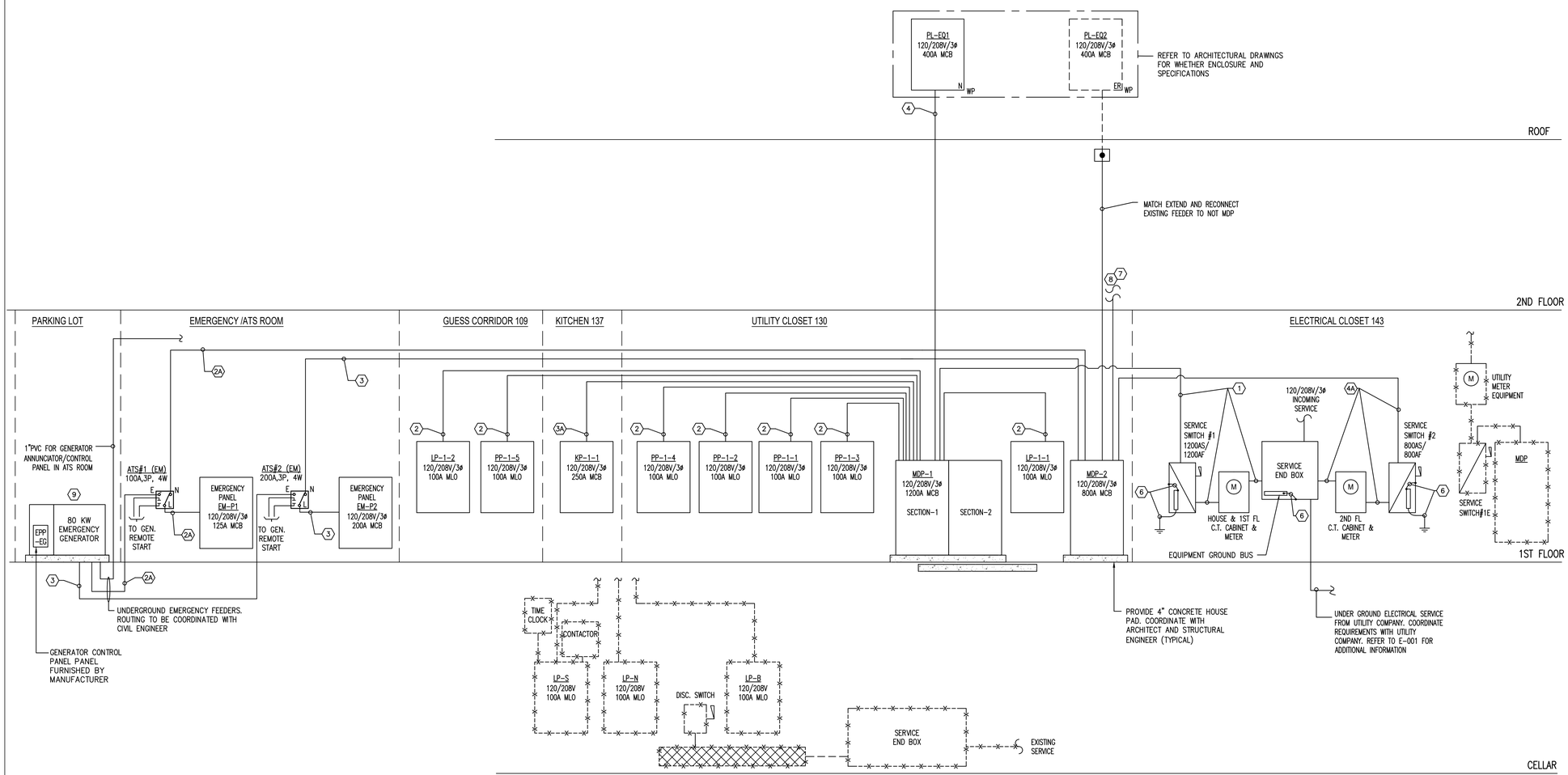

ELECTRICAL BLOCK RISER DIAGRAM

N.T.S.

LEGEND

- NEW WIRING AND EQUIPMENT
- EXISTING WIRING AND EQUIPMENT
- EXISTING WIRING AND EQUIPMENT TO BE REMOVED
- FUSED DISCONNECT SWITCH, XXAS SWITCH SIZE, XXAF FUSE SIZE
- ELECTRICAL DISTRIBUTION PANEL
- UTILITY METER
- WIRE THROUGH

RISER DIAGRAM GENERAL NOTES

1. ELECTRICAL EQUIPMENT, AND MATERIAL SHALL BE LISTED, LABELED, AND INSTALLED PER RECOGNIZED NYC ELECTRICAL TESTING LABORATORY.
2. PANELS AND SUB PANELS REQUIRE A LETTER ON LETTERHEAD FROM THE INSTALLER THAT THE TORQUE REQUIREMENTS HAVE BEEN MET TO THE MANUFACTURER'S INSTRUCTIONS.
3. TAPS TO THE PANELBOARD SHALL BE IN CONFORMANCE TO THE LISTING OF THE PANEL. THE EQUIPMENT USED TO MAKE THE TAP SHALL BE OF THE SAME MANUFACTURER AS THE PANELBOARD.
4. THE DESIGN TEMPERATURE OF THE CONDUCTORS AND THEIR TERMINATIONS SHALL BE 75°C.
5. ELECTRICAL CONTRACTOR TO PERFORM SHORT CIRCUIT STUDY, INCLUDING ACTUAL EQUIPMENT RATING, DISTANCES, FEEDER SIZES, ETC. COORDINATE ALL SHORT CIRCUIT RATING WITH EXISTING FIELD CONDITION, DISTANCES, UTILITY COMPANY, CODE REQUIREMENTS AND MANUFACTURER.
6. PARALLEL FEEDER CONDUCTORS SHALL BE CUT TO EXACTLY THE SAME LENGTHS AND SHALL BE FROM THE SAME FACTORY RUN. ALL CONNECTIONS FOR SAME FEEDER SHALL BE TORQUED TO IDENTICAL VALUES.
7. POWER DISTRIBUTION EQUIPMENT SUPPLIER SHALL PROVIDE EQUIPMENT APPROPRIATELY RATED AND BRACED TO ACCOMMODATE THE AVAILABLE FAULT CURRENT AT THE LOCATION IN THE ELECTRICAL DISTRIBUTION SYSTEM. THIS SUPPLIER SHALL ACCORDINGLY PROVIDE ANY RELATED CALCULATIONS SO THAT THEIR EQUIPMENT IS PROPERLY COORDINATED FOR THE AVAILABLE FAULT CURRENT. THE ELECTRICAL CONTRACTOR SHALL PROVIDE THIS SUPPLIER WITH COPIES OF THE ELECTRICAL DOCUMENTS AS REQUIRED SO THAT PROPERLY RATED/BRACED EQUIPMENT IS PROVIDED UNDER BASE BID. ALL EQUIPMENT SHALL BE FULLY RATED.
8. WORKING CLEARANCES SHALL BE PROVIDED FOR ALL ELECTRICAL EQUIPMENT (SWITCHBOARDS, PANELBOARDS, TRANSFORMERS, STARTERS, DISCONNECTS, ETC. AS APPLICABLE) IN STRICT COMPLIANCE WITH N.E.C. CHAPTER 1, SECTION 110-26(a). LOCATIONS SHOWN ON FLOOR PLANS ARE SCHEMATIC AND DIAGRAMMATIC IN NATURE. THE ELECTRICAL CONTRACTOR SHALL BE RESPONSIBLE FOR ENSURING COMPLIANCE WITH THE ABOVE N.E.C. REFERENCE. THIS REQUIREMENT APPLIES TO EQUIPMENT ON FLOOR PLANS AS WELL AS TO EQUIPMENT SHOWN ON RISER.
9. HOLD ALL NEW OVERHEAD ELECTRICAL WORK AS TIGHT AS POSSIBLE TO THE BOTTOM OF THE OVERHEAD STRUCTURE. LOCATE ANY RELATED PULLBOXES SO THAT THEY WILL BE FULLY ACCESSIBLE AFTER ALL CONSTRUCTION WORK IS COMPLETE. AS WITH ALL WORK, COORDINATE IN ADVANCE WITH ALL OTHER TRADES.
10. ALL UNDERGROUND FEEDERS SHALL BE INSTALLED IN RIGID METAL CONDUITS INLESS APPROVED BY THE ENGINEER, COORDINATE DIMENSIONS BASED ON MINIMUM DISTANCE BETWEEN RACEWAYS REQUIRED BY CODE AND HEAT DISSIPATION.
11. ALL WORK OUTSIDE OF TENANT'S SPACE SHALL BE BY A LANDLORD APPROVED E.C. AT THE TENANT'S EXPENSE. VERIFY ALL WORK REQUIRED BY THE LANDLORD PRIOR TO BID.
12. TWO OR MORE CONDUCTORS THAT LAND ON A SINGLE LUG SHALL BE LISTED FOR THAT USE.
13. PROVIDE FACTORY SERIES COORDINATION FOR ALL CIRCUIT BREAKERS (INCLUDING ALL BRANCH BREAKERS), RELATIVE TO "UPSTREAM" BREAKERS, SO THAT ONLY THE BREAKER CLOSEST IN THE CIRCUIT TO THE LOAD TRIPS UPON AN OVERLOAD OR FAULT CONDITION.
14. ALL PANELS SHALL BE IN NEMA-1 ENCLOSURES.
15. EC TO VERIFY ALL EXISTING ACTIVE BRANCH CIRCUITS TO REMAIN QUANTITY, POLES, RATINGS & CONTROL LEVEL. THEN EC TO SPLICE AND EXTEND ALL ACTIVE BRANCH CIRCUITS TO NEW PANEL LOCATIONS OR NEXT AVAILABLE SPACE. EC IS RESPONSIBLE TO RECONNECT ALL ACTIVE BRANCH CIRCUITS TO MAINTAIN CONTINUITY.

RISER KEYNOTES

(1) PROVIDE 3 SETS OF 4-#600MCM - 1#3/0 GND IN 4"C.

(2) PROVIDE 4-#3, 1#8 GND IN 1-1/2"C.

(2A) PROVIDE 4-#1, 1#6 GND IN 1-1/2"C.

(3) PROVIDE 4-#3/0, 1#6 GND IN 2"C.

(3A) PROVIDE 4-#300, 1#6 GND IN 2 1/2"C.

(4) PROVIDE 4-#500MCM, 1#3 GND IN 3"C.

(4A) PROVIDE 2 SETS OF 4-#600MCM, 1#1/0 GND IN 3"C.

(5) PROVIDE 2 SETS OF 4-#350MCM, 1#1 GND IN 3"C.

(6) PROVIDE 1-#1/0 AWG GROUNDING ELECTRODE CONDUCTOR FROM EQUIPMENT TO EARTH (GROUND). PROVIDE 1-#1/0 AWG MAIN BONDING JUMPER FROM EQUIPMENT GROUNDING BUS TO EQUIPMENT CASING.

(7) DISCONNECT FEEDERS AND CUT BACK CABLE AND CONDUIT FOR THE FOLLOWING EQUIPMENT TO THE NEAREST FEASIBLE POINT FOR RECONNECTION:
1. 2ND FLOOR PANELBOARDS
2. 2ND FLOOR HVAC EQUIPMENT
SHOULD CONDUIT RISERS BE PRESENT, LEAVE APPROXIMATELY 6" OF CONDUIT ABOVE THE FLOOR.

(8) SURVEY AND VERIFY IN FIELD ALL EXISTING ELECTRICAL EQUIPMENT ON 2ND FLOOR. RECONNECT ALL EXISTING 2ND FLOOR ELECTRICAL PANELS. TAP EXISTING CONDUCTORS AND REFEED ELECTRICAL EQUIPMENT WITH APPROPRIATE CABLE AND CONDUIT. PROVIDE PROPER BREAKER SIZE AND WIRING. PROVIDE UPDATED PANEL SCHEDULE.

(9) PROVIDE:
(1) MAIN NON AUTOMATIC CIRCUIT BREAKER 275A
(1) CIRCUIT BREAKER 100A (ATS#1)
(1) CIRCUIT BREAKER 200A (ATS#2)
WITHIN GENERATOR ENCLOSURE.

FIFIELD |PIAKER |ELMAN
ARCHITECTS, PC

740 Broadway, Suite 601
New York, NY 10003
tel 212 979 9272
www.fpe-architects.com

NO USE, REPRODUCTION OR DISSEMINATION MAY BE MADE OF THIS DRAWING & CONCEPTS SET FORTH HEREON WITHOUT THE PRIOR WRITTEN CONSENT OF

FIFIELD PIAKER ELMAN ARCHITECTS P.C. COPYRIGHT © 2023

MEP CONSULTANT:
AVCON ENGINEERING PC

AVCON ENGINEERING
580 8TH AVE, 14TH FLOOR
NEW YORK, NY 10018
PH: (646) 572-0488

Project:
CHABAD DOWNTOWN

30 WALL STREET
BINGHAMTON, NY 13901

No:	Description:	Date:
06	100% CD SET / BID AND PERMIT	08/19/25
05	100% REVIEW SET	06/16/25
04	95% CD SET	01/20/25
03	80% COORDINATION SET	08/07/24
02	ISSUED FOR PROGRESS	12/01/23
01	ISSUED FOR REVIEW	10/05/23

Revisions:

Job No: 10015
Scale: AS SHOWN
Date: 10/02/23
Drawn: TL

Sheet Title:
ELECTRICAL RISER DIAGRAM

Drawing No.:
E-500

BRANCH CIRCUIT PANEL SCHEDULE

PNL: PL-1-1
208Y/120, 3 PHASE, 4 WIRE

MOUNTING:			
SURFACE	X	MAIN LUGS ONLY	X
FLUSH		SHUNT TRIP MAIN	
IN MCC		FEED THRU LUG	
		NUMBER OF POLES:	42

Bus Rating: 100 A
GROUND BUS: X
ISOLATED GROUND BUS:

CKT No.	LOAD	TRIP (AMP)	KVA / PHASE A	B	C	KVA / PHASE A	B	C	TRIP (AMP)	LOAD	CKT No.
1	CH-1	20/3	1.00			0.63			20/2	EBB-2	2
3				1.00			0.63				4
5					1.00			0.38	20/2	EBB-1	6
7	CH-2	20/3	1.00			0.38					8
9				1.00			0.38		20/2	EBB-1	10
11					1.00			0.38			12
13	CH-3	25/3	1.67			0.75			20/2	EBB-3	14
15				1.67			0.75				16
17					1.67			0.60	20/1	WH-1	18
19	HX-1	20/3	0.25			0.60			20/1	WH-2	20
21				0.25			0.60		20/1	WH-3	22
23					0.25			0.36	20	RECEPT. RPZVALVE RM.	24
25	LIGHTING (PARKING LOT)	20	0.50			0.30			20/2	AC-12	26
27	SPARE	20		0.00			0.30				28
29	SPARE	20			0.00			0.30	20/1	CP-1,2,3/LD/SV	30
31	GX-1	20	0.20			0.60			20	CO	32
33	SPARE	20		0.00			0.60		20	HWP-2	34
35	REC EXTERIOR (GFCI)	20/2			0.18			1.10	20	B-1	36
37			0.18						20	SPARE	38
39	SPARE	20							20	SPARE	40
41	SPARE	20							20	SPARE	42

SUBTOTALS		4.80	3.92	4.10	3.26	3.26	3.12		SUBTOTALS
TOTAL LOADS	8.1	KVA	PHASE A					LIGHTING:	0.00 KVA
	7.2	KVA	PHASE B					RECEPTACLE:	0.18 KVA
	7.2	KVA	PHASE C					KITCHEN:	0.00 KVA
TOTAL CONN. LOAD	22.5	KVA	62.0	A				MOTOR:	22.28 KVA
TOTAL DEMAND LOAD	22.5	KVA	62.0	A				POWER:	0.00 KVA
								TOTAL:	22.46 KVA

BRANCH CIRCUIT PANEL SCHEDULE

PNL: PL-1-2
208Y/120, 3 PHASE, 4 WIRE

MOUNTING:			
SURFACE		MAIN LUGS ONLY	X
FLUSH	X	SHUNT TRIP MAIN	
IN MCC		FEED THRU LUG	
		NUMBER OF POLES:	30

Bus Rating: 100 A
GROUND BUS: X
ISOLATED GROUND BUS:

CKT No.	LOAD	TRIP (AMP)	KVA / PHASE A	B	C	KVA / PHASE A	B	C	TRIP (AMP)	LOAD	CKT No.
1	REC - SYNAGOGUE 136A	20/1	0.54			0.54			20/1	REC - MAIN CORRIDOR 135	2
3	REC - SOCIAL HALL 139	20/1		0.54			0.54		20/1	REC - MAIN CORRIDOR 135	4
5	REC - SOCIAL HALL 139	20/1			0.36			0.54	20/1	REC - MAIN CORRIDOR 135	6
7	REC - STORAGE 136B	20/1	0.36			0.36			20/1	REC - MAIN CORRIDOR 135	8
9	VAV-2/TX-1	20/1		0.20			1.00		20/1	REC - WOMENS RESTROOM 116	10
11	BEV. REFRIGERATOR	20/1			0.50			1.00	20/1	REC - MENS RESTROOM 117	12
13	WATER FOUTAIN	20/1	0.20			0.80			20/2	GATES (PARKING LOT)	14
15	SPARE	20/1					0.80				16
17	SPARE	20/1						0.80	20/2	GATES (PARKING LOT)	18
19	SPARE	20/1				0.80					20
21	SPARE	20/1							20/1	SPARE	22
23	SPARE	20/1							20/1	SPARE	24
25	SPARE	20/1							20/1	SPARE	26
27	SPARE	20/1							20/1	SPARE	28
29	SPARE	20/1							20/1	SPARE	30

SUBTOTALS		1.10	0.74	0.86	2.50	2.34	2.34		SUBTOTALS
TOTAL LOADS	3.6	KVA	PHASE A					LIGHTING:	0.00 KVA
	3.1	KVA	PHASE B					RECEPTACLE:	5.78 KVA
	3.2	KVA	PHASE C					KITCHEN:	0.00 KVA
TOTAL CONN. LOAD	9.9	KVA	27.0	A				MOTOR:	0.20 KVA
TOTAL DEMAND LOAD	9.9	KVA	27.0	A				POWER:	3.90 KVA
								TOTAL:	9.88 KVA

BRANCH CIRCUIT PANEL SCHEDULE

PNL: PL-1-3
208Y/120, 3 PHASE, 4 WIRE

MOUNTING:			
SURFACE	X	MAIN LUGS ONLY	X
FLUSH		SHUNT TRIP MAIN	
IN MCC		FEED THRU LUG	
		NUMBER OF POLES:	30

Bus Rating: 100 A
GROUND BUS: X
ISOLATED GROUND BUS:

CKT No.	LOAD	TRIP (AMP)	KVA / PHASE A	B	C	KVA / PHASE A	B	C	TRIP (AMP)	LOAD	CKT No.
1	REC - CLAS/PROG/LIB 132/133/134	20/1	0.72			1.40			20/1	RECEPT. PWR/USB (LOBBY)	2
3	REC - CLAS/PROG/LIB 132/133/134	20/1		0.72					20/1	SPARE	4
5	REC - CLAS/PROG/LIB 132/133/134	20/1			0.54				20/1	SPARE	6
7	REC - CLAS/PROG/LIB 132/133/134	20/1	0.54			0.72			20/1	REC - ADMIN/CONF 103/145	8
9	REC - PROGRAMMING 133 KITCHE	20/1		1.50			0.54		20/1	REC - ADMIN/CONF 103/145	10
11	REC - LOBBY 102	20/1			0.54			0.54	20/1	REC - POSITIVITY SPACE 106	12
13	REC - LOBBY/STAIR VEST 102/141	20/1	0.36			0.72			20/1	REC - POSITIVITY SPACE 106	14
15	REC - WOMENS WC 108	20/1		1.00			0.30		20/1	VAV-1,10/TX-3	16
17	REC - MENS WC 107	20/1			1.00			0.30	20/1	TX-2,9/MD	18
19	RECEPT. TV (LOBBY)	20/1	1.00			0.20			20/1	FIREPLACE (LOBBY)	20
21	BEV. REFIGERATOR (RM.133)	20/1		1.00			0.50		20/1	PROJECTOR (RM.132)	22
23	RECEPT. TV (132/133)	20/1			1.00			0.30	20/2	AC-13	24
25	SPARE	20/1				0.30					26
27	SPARE	20/1							20/1	SPARE	28
29	SPARE	20/1							20/1	SPARE	30

SUBTOTALS		2.62	4.22	3.08	3.34	1.34	1.14		SUBTOTALS
TOTAL LOADS	6.0	KVA	PHASE A					LIGHTING:	0.00 KVA
	5.6	KVA	PHASE B					RECEPTACLE:	10.84 KVA
	4.2	KVA	PHASE C					KITCHEN:	0.00 KVA
TOTAL CONN. LOAD	15.7	KVA	44.0	A				MOTOR:	0.60 KVA
TOTAL DEMAND LOAD	15.3	KVA	43.0	A				POWER:	4.30 KVA
								TOTAL:	15.74 KVA

BRANCH CIRCUIT PANEL SCHEDULE

PNL: PL-1-4
208Y/120, 3 PHASE, 4 WIRE

MOUNTING:			
SURFACE		MAIN LUGS ONLY	X
FLUSH	X	SHUNT TRIP MAIN	
IN MCC		FEED THRU LUG	
		NUMBER OF POLES:	30

Bus Rating: 100 A
GROUND BUS: X
ISOLATED GROUND BUS:

CKT No.	LOAD	TRIP (AMP)	KVA / PHASE A	B	C	KVA / PHASE A	B	C	TRIP (AMP)	LOAD	CKT No.
1	SPARE	20/1	0.00			0.00			20/1	SPARE	2
3	SPARE	20/1		0.00			0.00		20/1	SPARE	4
5	SPARE	20/1			0.00			0.00	20/1	SPARE	6
7	SPARE	20/1	0.00			0.00			20/1	SPARE	8
9	SPARE	20/1		0.00			1.50		20/1	REC - KITCHEN 129	10
11	SPARE	20/1			0.00			1.20	20/1	REC - KITCHEN 129 DISHWASHER	12
13	REC - PARSONAGE BR 03 125	20/1	0.36			0.50			20/1	REC - KITCHEN 129 RANGE	14
15	REC - PARSONAGE BR 02 124	20/1		0.36			1.50		20/1	REC - KITCHEN 129 MICROWAVE	16
17	REC - PARSONAGE BR 01 123	20/1			0.36			0.70	20/1	REC - KITCHEN 129 REFRIGERATO	18
19	REC - PARSONAGE MASTER BR 12	20/1	0.54			0.50			20/1	REC - PARSONAGE LIVING RMTX-4	20
21	REC - PARSONAGE MAST. BA 121B	20/1		0.50			0.36		20/1	REC - PARSONAGE LIVING RM	22
23	REC -MIKVA	20/1			0.18			0.50	20/1	REC - P. RM 127	24
25	EQP - MD	20/1	0.10			0.50			20/1	REC - BA. 02 126	26
27	REC - LOFT	20/1		0.54					20/1	SPARE	28
29	SPARE	20/1							20/1	SPARE	30

SUBTOTALS		1.00	1.40	0.54	1.50	3.36	2.40		SUBTOTALS
TOTAL LOADS	2.5	KVA	PHASE A					LIGHTING:	0.00 KVA
	4.8	KVA	PHASE B					RECEPTACLE:	9.38 KVA
	2.9	KVA	PHASE C					KITCHEN:	0.00 KVA
TOTAL CONN. LOAD	10.2	KVA	28.0	A				MOTOR:	0.00 KVA
TOTAL DEMAND LOAD	10.2	KVA	28.0	A				POWER:	0.82 KVA
								TOTAL:	10.20 KVA

BRANCH CIRCUIT PANEL SCHEDULE

PNL: PL-1-5
208Y/120, 3 PHASE, 4 WIRE

MOUNTING:			
SURFACE		MAIN LUGS ONLY	X
FLUSH	X	SHUNT TRIP MAIN	
IN MCC		FEED THRU LUG	
		NUMBER OF POLES:	42

Bus Rating: 100 A
GROUND BUS: X
ISOLATED GROUND BUS:

CKT No.	LOAD	TRIP (AMP)	KVA / PHASE A	B	C	KVA / PHASE A	B	C	TRIP (AMP)	LOAD	CKT No.
1	SPARE	20/1	0.00			0.00			20/1	SPARE	2
3	SPARE	20/1		0.00			0.00		20/1	SPARE	4
5	SPARE	20/1			0.00			0.00	20/1	SPARE	6
7	SPARE	20/1	0.00			0.00			20/1	SPARE	8
9	SPARE	20/1		0.00			0.00		20/1	SPARE	10
11	SPARE	20/1			0.00			0.00	20/1	SPARE	12
13	REC - CORRIDOR 109	20/1	0.36			0.20			20/1	VAV-3	14
15	REC - GUEST RM 110	20/1		0.36			0.36		20/1	REC - GUEST LOUNGE 111	16
17	REC - GUEST BATH 110A	20/1			0.50			1.50	20/1	REC - G.L. 111 MICROWAVE	18
19	REC - GUEST KITCHEN 110	20/1	1.50			0.50			20/1	REC - G.L. 111 RANGE	20
21	REC - GUEST RM 112	20/1		0.36			0.70		20/1	REC - G.L. 111 REFRIGERATOR	22
23	REC - GUEST BATH 112A	20/1			0.50			0.36	20/1	REC - GUEST RM 113	24
25	REC - GUEST KITCHEN 112	20/1	1.50			0.50			20/1	REC - GUEST BATH 113A	26
27	REC - GUEST RM 114	20/1		0.36			1.50		20/1	REC - GUEST KITCHEN 113	28
29	REC - GUEST BATH 114A	20/1			0.50			0.36	20/1	REC - GUEST RM 115	30
31	REC - LOFT	20/1	0.54			0.50			20/1	REC - GUEST BATH 115A	32
33	REC - GUEST LOUNGE 111	20/1		0.54			1.50		20/1	REC - GUEST KITCHEN 115	34
35	SPARE	20/1							20/1	SPARE	36
37	SPARE	20/1							20/1	SPARE	38
39	SPARE	20/1							20/1	SPARE	40
41	SPARE	20/1							20/1	SPARE	42

SUBTOTALS		3.90	1.62	1.50	1.70	4.06	2.22		SUBTOTALS
TOTAL LOADS	5.6	KVA	PHASE A					LIGHTING:	0.00 KVA
	5.7	KVA	PHASE B					RECEPTACLE:	13.72 KVA
	3.7	KVA	PHASE C					KITCHEN:	0.00 KVA
TOTAL CONN. LOAD	15.0	KVA	42.0	A				MOTOR:	0.20 KVA
TOTAL DEMAND LOAD	13.1	KVA	36.0	A				POWER:	1.08 KVA
								TOTAL:	15.00 KVA

BRANCH CIRCUIT PANEL SCHEDULE

PNL: KP-1-1
208Y/120, 3 PHASE, 4 WIRE
SECTION 1

MOUNTING:			
SURFACE		MAIN LUGS ONLY	
FLUSH	X	SHUNT TRIP MAIN	
IN MCC		FEED THRU LUG	
		NUMBER OF POLES:	42

MCB:250A
Bus Rating: 400 A
GROUND BUS: X
ISOLATED GROUND BUS:

CKT No.	LOAD	TRIP (AMP)	KVA / PHASE A	B	C	KVA / PHASE A	B	C	TRIP (AMP)	LOAD	CKT No.
1	E-002 (DISHWASHER)	60/2	5.00			0.30			20/2	E-025 (WALK-IN COOLER)	2
3				5.00			0.30				4
5	E-006 (PROOFER CABINET)	20/1			1.68				20/2	SPARE	6
7	E-009 (REFRIGERATOR)	20/1	0.67								8
9	E-013 (CONVECTION OVEN GAS)	20/1		0.96			0.84		20/1	E-028 (FOOD PROCESSOR)	10
11	E-013 (CONVECTION OVEN GAS)	20/1			0.96			0.36	20/1	E-029 (FOOD SLICER)	12
13	E-017 (ICE MAKER)	20/1	0.85			1.80			20/1	E-030 (FOOD BLENDER)	14
15	REC - PES. KITCHEN/LAUNDRY 11	20/1		1.50			1.20		20/1	REC - P.K.L. 118 W/D	16
17	REC - PES. KITCHEN/LAUNDRY 11	20/1			1.50			1.20	20/1	REC - P.K.L. 118 W/D	18
19	REC - P.K.L. 118 REFRIGERATOR	20/1	0.70			0.50			20/1	KX-1	20
21	REC - P.K.L. 118 RANGE	20/1		0.50					20/1	SPARE	22
23	REC - P.K.L. 118 W.O.	20/1			1.00				20/1	SPARE	24
25	MAU-1	15/3	1.00						20/1	SPARE	26
27				1.00					20/1	SPARE	28
29					1.00				20/1	SPARE	30
31	SPARE	20/1							20/1	SPARE	32
33	SPARE	20/1							20/1	SPARE	34
35	SPARE	20/1							20/1	SPARE	36
37	SPARE	20/1							20/1	SPARE	38
39	SPARE	20/1							20/1	SPARE	40
41	SPARE	20/1							20/1	SPARE	42

SUBTOTALS		8.22	8.96	6.14	2.60	2.34	1.56		SUBTOTALS
TOTAL LOADS	22.7	KVA	PHASE A					LIGHTING:	5.87 KVA
	19.0	KVA	PHASE B					RECEPTACLE:	27.42 KVA
	15.4	KVA	PHASE C					KITCHEN:	18.72 KVA
TOTAL CONN. LOAD	57.1	KVA	159.0	A				MOTOR:	5.10 KVA
TOTAL DEMAND LOAD	43.3	KVA	120.0	A				POWER:	0.00 KVA
								TOTAL:	57.11 KVA

* KITCHEN EQUIPMENT SUPPLIER SHALL PROVIDE CONTROL PANEL. PANEL SHALL BE FACTORY PREWIRED AND TESTED FOR MUA FAN; KX FAN; SHUNT TRIP; FIRE SUPRESSSION SYSTEM; GAS SHUT OFF VALVE; MANUAL PULL STATION; ETC.

FIFIELD |PIAKER |ELMAN
ARCHITECTS, PC

740 Broadway, Suite 601
New York, NY 10003
tel 212 979 9272
www.fpe-architects.com

NO USE, REPRODUCTION OR DISSEMINATION MAY BE MADE OF THIS DRAWING & CONCEPTS SET FORTH HEREON WITHOUT THE PRIOR WRITTEN CONSENT OF

FIFIELD PIAKER ELMAN ARCHITECTS P.C.
COPYRIGHT © 2023

MEP CONSULTANT:
AVCON ENGINEERING PC

AVCON ENGINEERING
580 8TH AVE, 14TH FLOOR
NEW YORK, NY 10018
PH: (646) 572-0488

Project:
CHABAD DOWNTOWN

30 WALL STREET
BINGHAMTON, NY 13901

No:	Description:	Date:
06	100% CD SET / BID AND PERMIT	08/19/25
05	100% REVIEW SET	06/16/25
04	95% CD SET	01/20/25
03	80% COORDINATION SET	08/07/24
02	ISSUED FOR PROGRESS	12/01/23
01	ISSUED FOR REVIEW	10/05/23

Revisions:

Job No: 10015
Scale: AS SHOWN
Date: 10/02/23
Drawn: TL

Sheet Title:
ELECTRICAL PANEL SCHEDULES I

Drawing No.:
E-600

PANEL SCHEDULE

PANEL : MDP-2	BUS RATING: 800 A		FULL NEUTRAL PLUS GROUND BUS
208Y/120, 3 PHASE, 4 WIRE	MOUNTING: FLOOR		MCB: 800A
MIN A.I.C. SYM			

CKT. NO.	SERVICE TO:	CONNECTED LOAD KVA	CONNECTED LOAD AMPS	PROTECTIVE DEVICE SWITCH AMPS	PROTECTIVE DEVICE TRIP AMPS	POLES	FEEDER
1	EXISTING PANEL	28.80	80	100	100	CO	
2	EXISTING PANEL	36.00	100	125	125	3	
3	EXISTING PANEL	36.00	100	125	125	3	
4	EXISTING PANEL	57.60	160	200	200	3	
5	PL-EQP2 (EXISTING)	115.20	320	400	400	3	
6							
7							
8							
9							
10							
11							
12							
	CONNECTED LOADS	**273.60**	**760.00**				
	TOTAL DEMAND	**236.80**	**657.78**				

PANEL SCHEDULE

PANEL : MDP-1 (SECTION-1 & SECTION-2)	BUS RATING: 1200 A		FULL NEUTRAL PLUS GROUND BUS
208Y/120, 3 PHASE, 4 WIRE	MOUNTING: FLOOR		MCB:1200A
MIN A.I.C. SYM			

CKT. NO.	SERVICE TO:	CONNECTED LOAD KVA	CONNECTED LOAD AMPS	PROTECTIVE DEVICE SWITCH AMPS	PROTECTIVE DEVICE TRIP AMPS	POLES	FEEDER
1	PL-1-1	22.50	62	100	100	3	
2	PL-1-2	9.90	27	100	100	3	
3	PL-1-3	15.70	44	100	100	3	
4	PL-1-4	10.20	28	100	100	3	
5	PL-1-5	15.00	42	100	100	3	
6	KP-1-1	57.10	159	400	250	3	
7	PL-EQ1	100.60	279	400	400	3	
8	LP-1-1	19.70	55	100	100	3	
9	EM-P1	27.30	76	125	200	3	
10	EM-P2	48.30	132	200	200	3	
11	CHARGING STATION	29.00	80	100	0	3	
12	CHARGING STATION	29.00	80	100	0	3	
	CONNECTED LOADS	**384.30**	**1064.00**				
	TOTAL DEMAND	**289.19**	**803.29**				

BRANCH CIRCUIT PANEL SCHEDULE

PNL: EM-P1
208Y/120, 3 PHASE, 4 WIRE
SECTION 2

MOUNTING:	SURFACE	X	MAIN LUGS ONLY	MCB: 125A
	FLUSH		SHUNT TRIP MAIN	Bus Rating: 225 A
	IN MCC		FEED THRU LUG	GROUND BUS: X
			NUMBER OF POLES: 42	ISOLATED GROUND BUS:

CKT No.	LOAD	TRIP (AMP)	KVA / PHASE A	KVA / PHASE B	KVA / PHASE C	KVA / PHASE A	KVA / PHASE B	KVA / PHASE C	TRIP (AMP)	LOAD	CKT No.
1	EM LIGHTING	20	1.76			0.10			20	EXIT SIGNS	2
3	EM LIGHTING	20		1.73			0.00		20	SPARE	4
5	SPARE	20			0.00			1.50	20	RECEPT PARSONAGE APT	6
7	LTG. SYNAGOG. /SOCIAL HALL	20	1.68			1.31			20	REC - LOBBY 102	8
9	REC - OFFICE 103/145	20		0.54			1.40		20	REC - OFFICE 104/105	10
11	REC - OFFICE 103/145	20			0.54			1.40	20	REC - OFFICE 104/106	12
13	RECEPT. SYNAGOG. /SOCIAL HALL	20	1.10			1.40			20	REC - OFFICE 104/106	14
15	LIGHTING (CELLAR)	20		0.60			1.50		20	KITCHEN (137)	16
17	SPARE	20			0.00			1.60	20	WIFI RECEPTACLE (4)	18
19	RECEPTACLE IT/AV (RM. 135C)	20	1.60			1.50			20	RECEPT. - PWR/USB LOBBY 102	20
21	RECEPTACLE IT/AV (RM. 135C)	20		1.60			0.00		20	SPARE	22
23	RECEPTACLE IT/AV (RM. 135C)	20			1.60			0.75	20/2	E-026 FREEZER 137B (KITCHEN)	24
25	SPARE	20	0.00			0.75					26
27	SPARE	20		0.00			0.30		20/2	E-025 (WALK-IN COOLER)	28
29	SPARE	20			0.00			0.30			30
31	SPARE	20	0.00			0.00			20	SPARE	32
33	SPARE	20		0.00			0.00		20	SPARE	34
35	SPARE	20			0.00			0.00	20	SPARE	36
37	SPARE	20	0.00			0.73			20	SPARE	38
39	SPARE	20							20	SPARE	40
41	SPARE	20							20	SPARE	42

SUBTOTALS		6.14	4.47	2.14	5.79	3.20	5.55		SUBTOTALS
TOTAL LOADS	11.9	KVA	PHASE A					LIGHTING:	5.87 KVA
	7.7	KVA	PHASE B					RECEPTACLE:	19.32 KVA
	7.7	KVA	PHASE C					KITCHEN:	0.00 KVA
TOTAL CONN. LOAD	27.3	KVA	76.0	A				MOTOR:	2.10 KVA
TOTAL DEMAND LOAD	24.1	KVA	67.0	A				POWER:	0.00 KVA
								TOTAL:	27.29 KVA

BRANCH CIRCUIT PANEL SCHEDULE

PNL: EM-P2
208Y/120, 3 PHASE, 4 WIRE
(EXISTING)

MOUNTING:	SURFACE	X	MAIN LUGS ONLY	MCB: 200A
	FLUSH		SHUNT TRIP MAIN	Bus Rating: 225 A
	IN MCC		FEED THRU LUG	GROUND BUS:
			NUMBER OF POLES: 42	ISOLATED GROUND BUS:

CKT No.	LOAD	TRIP (AMP)	KVA / PHASE A	KVA / PHASE B	KVA / PHASE C	KVA / PHASE A	KVA / PHASE B	KVA / PHASE C	TRIP (AMP)	LOAD	CKT No.
1	CU-2	50/3	3.80			7.70			90/3	RTU-5	2
3				3.80			7.70				4
5					3.80			7.70			6
7	VAV-4,5,6,7,8	20	0.20			0.10			20/2	AC-7	8
9	AC-6	20/2	0.10				0.10				10
11				0.10				0.10	20/2	AC-9	12
13	AC-8	20/2			0.10	0.10					14
15			0.10				0.10		20/2	AC-11	16
17	AC-10	20/2		0.10				0.10			18
19					0.10	0.10			20/2	AC-4	20
21	AC-1	20/2		0.10			0.10				22
23					0.10			0.10	20/2	AC-5	24
25	AC-2	20/2	0.10			0.10					26
27				0.10			3.80		50/3	CU-1	28
29	AC-3	20/2			0.10			3.80			30
31			0.10			3.80					32
33	SPARE	20							20	SPARE	34
35	SPARE	20							20	SPARE	36
37	SPARE	20							20	SPARE	38
39	SPARE	20							20	SPARE	40
41	SPARE	20							20	SPARE	42

SUBTOTALS		4.40	4.20	4.20	11.90	11.80	11.80		SUBTOTALS
TOTAL LOADS	16.3	KVA	PHASE A					LIGHTING:	0.00 KVA
	16.0	KVA	PHASE B					RECEPTACLE:	0.20 KVA
	16.0	KVA	PHASE C					KITCHEN:	0.00 KVA
TOTAL CONN. LOAD	48.3	KVA	132.0	A				MOTOR:	47.50 KVA
TOTAL DEMAND LOAD	47.7	KVA	132.0	A				POWER:	0.00 KVA
< Load & Total not equal >								TOTAL:	47.70 KVA

BRANCH CIRCUIT PANEL SCHEDULE

PNL: PL-EQ1
208Y/120, 3 PHASE, 4 WIRE

MOUNTING:	SURFACE	X	MAIN LUGS ONLY	X
	FLUSH		SHUNT TRIP MAIN	Bus Rating: 400 A
	IN MCC		FEED THRU LUG	GROUND BUS: X
			NUMBER OF POLES: 42	ISOLATED GROUND BUS:

CKT No.	LOAD	TRIP (AMP)	KVA / PHASE A	KVA / PHASE B	KVA / PHASE C	KVA / PHASE A	KVA / PHASE B	KVA / PHASE C	TRIP (AMP)	LOAD	CKT No.
1	RTU-1	90/3	8.00			1.30			30/3	CU-3	2
3				8.00			1.30				4
5					8.00			1.30			6
7	RTU-3	90/3	7.68			3.96			45/3	RTU-8	8
9				7.68			3.96				10
11					7.68			3.96			12
13	CU-4	30/3	2.30			0.80			20/3	KX-1	14
15				2.30			0.80				16
17					2.30			0.80			18
19	SPARE	20	0.00			1.20			20	DXF-1	20
21	SPARE	20		0.00					20	SPARE	22
23	SPARE	20			0.00				20	SPARE	24
25	SPARE	20							20	SPARE	26
27	SPARE	20							20	SPARE	28
29	SPARE	20							20	SPARE	30
31	SPARE	20							20	SPARE	32
33	SPARE	20							20	SPARE	34
35	SPARE	20							20	SPARE	36
37	SPACE									SPACE	38
39	SPACE									SPACE	40
41	SPACE									SPACE	42

SUBTOTALS		17.98	17.98	17.98	7.26	6.06	6.06		SUBTOTALS
TOTAL LOADS	37.2	KVA	PHASE A					LIGHTING:	5.87 KVA
	31.7	KVA	PHASE B					RECEPTACLE:	19.32 KVA
	31.7	KVA	PHASE C					KITCHEN:	0.00 KVA
TOTAL CONN. LOAD	100.6	KVA	279.0	A				MOTOR:	75.42 KVA
TOTAL DEMAND LOAD	97.4	KVA	270.0	A				POWER:	0.00 KVA
								TOTAL:	100.61 KVA

BRANCH CIRCUIT PANEL SCHEDULE

PNL: LP-1-1
208Y/120, 3 PHASE, 4 WIRE
SECTION 1

MOUNTING:	SURFACE	X	MAIN LUGS ONLY	X
	FLUSH		SHUNT TRIP MAIN	Main Lugs Only: 100 A
	IN MCC		FEED THRU LUG	GROUND BUS: X
			NUMBER OF POLES: 30	ISOLATED GROUND BUS:

CKT No.	LOAD	TRIP (AMP)	KVA / PHASE A	KVA / PHASE B	KVA / PHASE C	KVA / PHASE A	KVA / PHASE B	KVA / PHASE C	TRIP (AMP)	LOAD	CKT No.
1	LIGHTING S1- LT9 SYNAGOGUE	20	0.60			1.60			20	LIGHTING SYNAGOGUE	2
3	LIGHTING SYMAGOGUE	20		1.60			1.60		20	LIGHTING SOSIAL HALL	4
5	LIGHTING SOSIAL HALL	20			1.60			1.60	20	LIGHTING	6
7	LIGHTING GUEST ROOMS	20	1.00			1.40			20	LIGHTING	8
9	LIGHTING GUEST COR. & THE WEL	20		0.30			1.50		20	LIGHTING MAIN CORRIDOR	10
11	LIGHTING LOBBY & MAIN CORRIDO	20			1.60			1.40	20	LIGHTING MAIN CORRIDOR	12
13	LIGHTING PARSONAGE APT.	20	0.60			0.60			20	EXTERIOR LIGHTING	14
15	LIGHTING PARSONAGE APT.	20		0.60			1.60		20	EXTERIOR LIGHTING	16
17	LIGHTING (CELLAR)	20			0.60				20	SPARE	18
19	SPARE	20							20	SPARE	20
21	SPARE	20							20	SPARE	22
23	SPARE	20							20	SPARE	24
25	SPARE	20							20	SPARE	26
27	SPARE	20							20	SPARE	28
29	SPARE	20							20	SPARE	30

SUBTOTALS		2.20	2.50	3.80	3.60	4.70	3.00		SUBTOTALS
TOTAL LOADS	5.8	KVA	PHASE A					LIGHTING:	19.80 KVA
	7.2	KVA	PHASE B					RECEPTACLE:	0.00 KVA
	6.8	KVA	PHASE C					KITCHEN:	0.00 KVA
TOTAL CONN. LOAD	19.8	KVA	55.0	A				MOTOR:	0.00 KVA
TOTAL DEMAND LOAD	24.8	KVA	69.0	A				POWER:	0.00 KVA
								TOTAL:	19.80 KVA

FIFIELD |PIAKER |ELMAN
ARCHITECTS, PC

740 Broadway, Suite 601
New York, NY 10003
tel 212 979 9272
www.fpe-architects.com

NO USE, REPRODUCTION OR DISSEMINATION MAY BE MADE OF THIS DRAWING & CONCEPTS SET FORTH HEREON WITHOUT THE PRIOR WRITTEN CONSENT OF

FIFIELD PIAKER ELMAN ARCHITECTS P.C. COPYRIGHT © 2023

MEP CONSULTANT:
AVCON ENGINEERING PC

AVCON ENGINEERING
580 8TH AVE, 14TH FLOOR
NEW YORK, NY 10018
PH: (646) 572-0488

Project:
CHABAD DOWNTOWN

30 WALL STREET
BINGHAMTON, NY 13901

No:	Description:	Date:
06	100% CD SET / BID AND PERMIT	08/19/25
05	100% REVIEW SET	06/16/25
04	95% CD SET	01/20/25
03	80% COORDINATION SET	08/07/24
02	ISSUED FOR PROGRESS	12/01/23
01	ISSUED FOR REVIEW	10/05/23

Revisions:

Job No: 10015
Scale: AS SHOWN
Date: 10/02/23
Drawn: TL

Sheet Title:
ELECTRICAL PANEL SCHEDULES II

Drawing No.:
E-601

System No. W-L-3065

WL 3065

Classified by Underwriters Laboratories, Inc. to UL 1479 and CAN/ULC-S115

ANSI/UL1479 (ASTM E814)	CAN/ULC S115
F Ratings — 1 and 2 Hr (See Item 1)	F Ratings — 1 and 2 Hr (See Item 1)
T Rating — 0 and 3/4 Hr (See item 3)	FT Rating — 0 and 3/4 Hr (See item 3)
L Rating At Ambient — 15 CFM/sq ft	FH Ratings — 1 and 2 Hr (See Item 1)
L Rating At 400 F — 8 CFM/sq ft	FTH Rating — 0 and 3/4 Hr (See item 3)
	L Rating At Ambient — 15 CFM/sq ft
	L Rating At 400 F — 8 CFM/sq ft

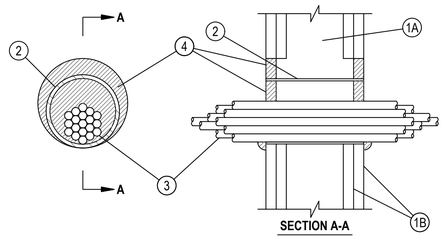

SECTION A-A

1. Wall Assembly — The 1 or 2 fire-rated gypsum wallboard/stud wall assembly shall be constructed of the materials and in the manner specified in the individual U300, U400 or V400 Series Wall and Partition Designs in the UL Fire Resistance Directory and shall include the following construction features:
   A. Studs — Wall framing may consist of either wood studs or steel channel studs. Wood studs to consist of nom 2 by 4 in. (51 by 102 mm) lumber spaced 16 in. (406 mm) OC. Steel studs to be min 2-1/2 in. (64 mm) wide and spaced max 24 in. (610 mm) OC.
   B. Gypsum Board* — Nom 5/8 in. (16 mm) thick gypsum board, with square or tapered edges. The gypsum board type, thickness, number of layers, fastener type and sheet orientation shall be as specified in the individual U300, U400 or V400 Series Design in the UL Fire Resistance Directory. Max diam of opening is 5-1/2 in. (138 mm) when sleeve (Item 2) is employed. Max diam of opening is 4 in. (102 mm) when sleeve (Item 2) is not employed.
   The F Rating of the firestop system is equal to the fire rating of the wall assembly.
2. Metallic Sleeve — (Optional) - Nom 4 in. (102 mm) diam (or smaller) steel electrical metallic tubing (EMT) or Schedule 5 (or heavier) steel pipe or min 0.016 in. thick (0.41 mm, No. 28 ga) galv steel sleeve installed flush with wall surfaces. The annular space between steel sleeve and periphery of opening shall be min 0 in. (0 mm, point contact) to max 1 in. (25mm). When Schedule 5 steel pipe or EMT is used, sleeve may extend up to 18 in. (457 mm) beyond the wall surfaces. As an option when Schedule 5 steel pipe or EMT is used, sleeve may extend continuously beyond one wall surface. When cable bundle penetrates wall assembly at an angle of 45 degrees, no metallic sleeve is used.

Hilti Firestop Systems

Reproduced by HILTI, Inc. Courtesy of Underwriters Laboratories, Inc. February 06, 2014

Page: 1 of 2

System No. W-L-3065

WL 3065

3. Cables — Aggregate cross-sectional area of cable in opening to be max 45 percent of the cross-sectional area of the opening. The annular space between the cable bundle and the periphery of the opening to be min 0 in. (point contact) to max 1 in. (25 mm). When sleeve is continuous on one side of wall (see Item 2), the cable fill may be 0 to 45% and the max annular space is not limited. Cables to be rigidly supported on both sides of the wall assembly. Cable bundle, using cables described below, may penetrate the wall at an angle not greater than 45 degrees. Any combination of the following types and sizes of copper conductor cables may be used:
   A. Max 7/C No. 12 AWG with polyvinyl chloride (PVC) insulation and jacket.
   B. Max 25 pair No. 24 AWG telephone cable with PVC insulation and jacket.
   B1. Max 4 pr No. 22 AWG Cat 5 or Cat 6 computer cables.
   C. Type RG/U coaxial cable with polyethylene (PE) insulation and PVC jacket having a max outside diameter of ½ in. (13 mm).
   C1. Max RG 6/U coaxial cable with fluorinated ethylene insulation and jacketing.
   D. Multiple fiber optical communication cable jacketed with PVC and having a max OD of 5/8 in. (16 mm).
   E. Through Penetrating Products*+— Max three copper conductor No. 8 AWG .Metal-Clad Cable+.
   AFC CABLE SYSTEMS INC
   F. Max 3/C (with ground)(or smaller) No. 8 AWG copper conductor cable with PVC insulation and jacketing.
   G. Max 3/4 in. (19 mm) diam copper ground cable with or without a PVC jacket.
   H. Fire Resistive Cables* - Max 1-1/4 in. (32 mm) diam single conductor or multi conductor Type MI cable. A min 1/8 in. (3 mm) separation shall be maintained between MI cables and any other types of cable.
   I. Max 4/C with ground 300 kcmil (or smaller) aluminum SER cable with PVC insulation and jacket.
   J. Through Penetrating Product* - Any cables, Metal-Clad Cable+ or Armored Cable+ currently Classified under the Through Penetrating Products category.
   K. Maximum 3/C No. 8 AWG metal-clad cable.
   L. Maximum 5/8 diam fiber-optic cable with PVC jacket.
   For cable bundle penetrating the wall assembly at an angle of 45 degrees, the T rating is ¾ hr for a 2 hr wall assembly.
   See Through Penetrating Product (XHLY) category in the Fire Resistance Directory for names of manufacturers.
4. Fill, Void or Cavity Material*— Sealant or Putty — Fill material applied within the annulus, flush with each end of the steel sleeve or wall surface. Fill material installed symmetrically on both sides of the wall. A min 5/8 in. (16 mm) thickness of sealant is required for the 1 or 2 hr F Rating . An additional 1/2 in. (13 mm) diam bead of fill material shall be applied at the interface of sleeve with gypsum board.
   HILTI CONSTRUCTION CHEMICALS, DIV OF HILTI INC — CP601S, CP606, FS-One Sealants or CP618 Putty
5. Packing Material — (Optional, Not Shown) — Mineral wool forming material may be used as a backer for the fill material (Item 4). When used, it shall be firmly packed into annular space within the sleeve as a permanent form and recessed from end of sleeve to accommodate the required thickness of fill material.

*Bearing the UL Classification Mark
+Bearing the UL Listing Mark

Hilti Firestop Systems

Reproduced by HILTI, Inc. Courtesy of Underwriters Laboratories, Inc. February 06, 2014

Page: 2 of 2

Classified by Underwriters Laboratories, Inc. to UL 1479 and CAN/ULC-S115

ANSI/UL1479 (ASTM E814)	CAN/ULC S115
F Ratings —1 and 2 Hr (See Items 1 and 3)	F Ratings — 1 and 2 Hr (See Items 1 and 3)
T Rating — 0 Hr	FT Rating — 0 Hr
L Rating at Ambient — Less Than 1 CFM/sq ft	FH Ratings —1 and 2 Hr (See Items 1 and 3)
L Rating at 400 F — Less Than 1 CFM/sq ft	FTH Rating — 0 Hr
	FTH Rating — 0 Hr
	L Rating at Ambient — Less Than 1 CFM/sq ft L Rating at 400 F — Less Than 1 CFM/sq ft

System No. W-L-1054

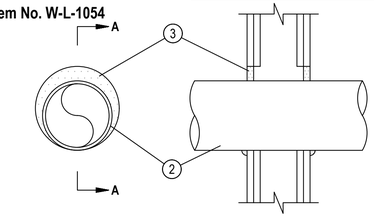

1. Wall Assembly — The 1 or 2 hr fire-rated gypsum wallboard/stud wall assembly shall be constructed of the materials and in the manner specified in the individual U300 or U400 Series Wall and Partition Designs in the UL Fire Resistance Directory and shall include the following construction features:
   A. Studs — Wall framing may consist of either wood studs or steel channel studs. Wood studs to consist of nom 2 by 4 in. lumber spaced 16 in. OC. Steel studs to be min 2-1/2 in. wide and spaced max 24 in. OC. When steel studs are used and the diam of opening exceeds the width of stud cavity, the opening shall be framed on all sides using lengths of steel stud installed between the vertical studs and screw-attached to the steel studs at each end. The framed opening in the wall shall be 4 to 6 in. wider and 4 to 6 in. higher than the diam of the penetrating item such that, when the penetrating item is installed in the opening, a 2 to 3 in. clearance is present between the penetrating item and the framing on all four sides.
   B. Gypsum Board* — 5/8 in. thick, 4 ft wide with square or tapered edges. The gypsum board type, thickness, number of layers, fastener type and sheet orientation shall be as specified in the individual U300 or U400 Series Design in the UL Fire Resistance Directory. Max diam of opening is 32-1/4 in. for steel stud walls. Max diam of opening is 14-1/2 in. for wood stud walls.
   The F Rating of the firestop system is equal to the fire rating of the wall assembly.
2. Through-Penetrants — One metallic pipe, conduit or tubing to be installed either concentrically or eccentrically within the firestop system. The annular space shall be min 0 in. to max 2-1/4 in. Pipe may be installed with continuous point contact. Pipe, conduit or tubing may be installed at an angle not greater than 45 degrees from perpendicular. Pipe, conduit or tubing to be rigidly supported on both sides of wall assembly. The following types and sizes of metallic pipes, conduits or tubing may be used:
   A. Steel Pipe — Nom 30 in diam (or smaller) Schedule 10 (or heavier) steel pipe.
   B. Iron Pipe — Nom 30 in. diam (or smaller) cast or ductile iron pipe.
   C. Conduit — Nom 4 in diam (or smaller) steel electrical metallic tubing or 6 in. diam steel conduit.
   D. Copper Tubing — Nom 6 in. diam (or smaller) Type L (or heavier) copper tubing.
   E. Copper Pipe — Nom 6 in. diam (or smaller) regular (or heavier) copper pipe.
3. Fill, Void or Cavity Material* — Sealant — Min 5/8 in. thickness of fill material applied within the annulus, flush with both surfaces of wall. At the point or continuous contact locations between pipe and wall, a min 1/2 in. diam bead of fill material shall be applied at the pipe wall interface on both surfaces of wall .
   HILTI CONSTRUCTION CHEMICALS, DIV OF HILTI INC — FS-One Sealant

*Bearing the UL Classification Mark

Hilti Firestop Systems

Reproduced by HILTI, Inc. Courtesy of Underwriters Laboratories, Inc. November 26, 2012

1 METAL PIPE THROUGH CONCRETE FLOORING / WALL (2-HR.)

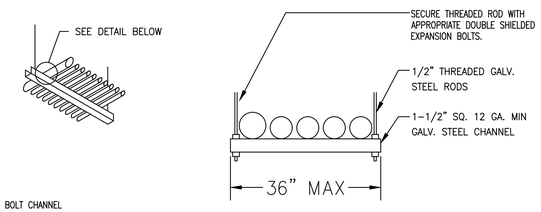

SINGLE BOLT CHANNEL CONDUIT STRAPS

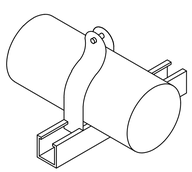

NOTES:

1. CONTRACTOR MAY USE A CONDUIT SUSPENSION SYSTEM EQUIVALENT TO THAT WHICH IS DETAILED, HAVING THE FEATURES SHOWN AND APPROVED IN ADVANCE BY THE ENGINEER.
2. CONDUIT SUSPENSION SYSTEM SHALL BE INDEPENDENT OF ANY OTHER SUSPENSION SYSTEM
3. SHOP DRAWINGS DETAILING. THE INSTALLATION AND LAYOUT OF CONDUIT SUPPORTING SYSTEM SHALL BE SUBMITTED TO THE ENGINEER FOR APPROVAL PRIOR TO START OF WORK.

2 CONDUIT HANGER DETAIL

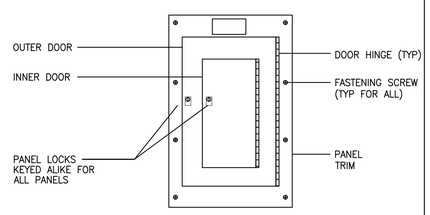

3 PANELBOARD WITH DOOR-IN-DOOR TRIM TYPE

WARNING

Arc Flash and Shock Hazard
Appropriate PPE Required

Do not operate controls or open covers without appropriate personal protection equipment.

Failure to comply may result in injury or death.

Refer to NFPA 70E for minimum PPE requirements.

NOTES:

1. PROVIDE GENERIC ARC-FLASH LABELS AS SHOWN ON ALL ELECTRIC LOAD CENTERS, PANELBOARDS, SWITCHBOARDS, SWITCHGEAR, MOTOR CONTROLLERS, VFDS, ATS, ENCLOSED SWITCHES AND CIRCUIT BREAKERS, CONTROL PANELS, SPLICE BOXES AND ALL OTHER ELECTRICAL SERVICE & DISTRIBUTION EQUIPMENT.
2. LABELS TO COMPLY WITH NFPA 70, NFPA 70E, 29 CFR 1910.144, 29 CFR 1910.145 (OSHA) AND ANSI Z535 (COLORS, SYMBOLS, ETC.)
3. LABELS SHALL BE SELF-ADHESIVE, POLYESTER OR VINYL FILM LABELS; PREPRINTED, 6-MIL-THICK, FLEXIBLE LABEL LAMINATED WITH A CLEAR, WEATHERPROOF, UV-RESISTANT, CHEMICAL RESISTANT COATING. MINIMUM LETTER HEIGHT SHALL BE 3/8 INCH.
4. INSTALL IDENTIFICATION MATERIALS AND DEVICES AT LOCATIONS FOR MOST CONVENIENT VIEWING WITHOUT INTERFERENCE WITH OPERATION AND MAINTENANCE OF EQUIPMENT. APPLY TO EXTERIOR OF DOOR, COVER, OR OTHER ACCESS.

4 ARC FLASH LABEL

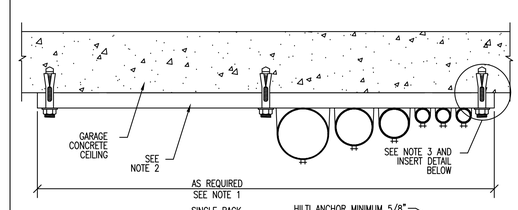

NOTES:

1. LENGTH VARIES WITH NUMBER OF CONDUITS TO BE SUPPORTED.
2. UNISTRUT WITH ALLOWABLE LOADING PER MANUFACTURER'S RECOMMENDATIONS.
3. FOR SUPPORT IN CONCRETE, USE SWIVEL CONCRETE INSERTS, AS SHOWN.
4. SUBMIT STRUCTURAL ENGINEERING CALCULATIONS BY A REGISTERED ENGINEER IN THE STATE OF CALIFORNIA TO KOCHER & SCHIRRA FOR REVIEW AND APPROVAL PRIOR TO STARTING CONSTRUCTION.

5 CONDUIT CEILING SUPPORT- SINGLE RACK

FIFIELD |PIAKER |ELMAN
ARCHITECTS, PC

740 Broadway, Suite 601
New York, NY 10003
tel 212 979 9272
www.fpe-architects.com

NO USE, REPRODUCTION OR DISSEMINATION MAY BE MADE OF THIS DRAWING & CONCEPTS SET FORTH HEREON WITHOUT THE PRIOR WRITTEN CONSENT OF

FIFIELD PIAKER ELMAN ARCHITECTS P.C. COPYRIGHT © 2023

MEP CONSULTANT:
AVCON ENGINEERING PC

AVCON ENGINEERING
580 8TH AVE, 14TH FLOOR
NEW YORK, NY 10018
PH: (646) 572-0488

Project:
CHABAD DOWNTOWN

30 WALL STREET
BINGHAMTON, NY 13901

No:	Description:	Date:
06	100% CD SET / BID AND PERMIT	08/19/25
05	100% REVIEW SET	06/16/25
04	95% CD SET	01/20/25
03	80% COORDINATION SET	08/07/24
02	ISSUED FOR PROGRESS	12/01/23
01	ISSUED FOR REVIEW	10/05/23

Revisions:

Job No: 10015
Scale: AS SHOWN
Date: 10/02/23
Drawn: TL

Sheet Title:
ELECTRICAL DETAILS

Drawing No.:
E-700

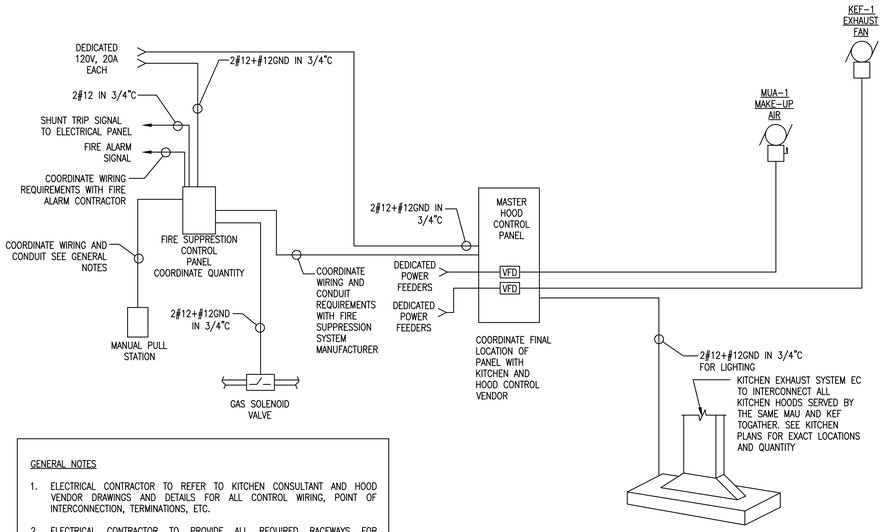

GENERAL NOTES

1. ELECTRICAL CONTRACTOR TO REFER TO KITCHEN CONSULTANT AND HOOD VENDOR DRAWINGS AND DETAILS FOR ALL CONTROL WIRING, POINT OF INTERCONNECTION, TERMINATIONS, ETC.
2. ELECTRICAL CONTRACTOR TO PROVIDE ALL REQUIRED RACEWAYS FOR CONTROL WIRING UNLESS OTHERWISE NOTED. REQUIRED RACEWAY SIZES, ROUTING ETC., SHALL BE COORDINATED WITH THE KITCHEN HOOD CONSULTANT, VENDOR AND FIELD CONDITIONS.
3. ELECTRICAL CONTRACTOR TO PROVIDE ALL REQUIRED RACEWAYS FOR CONTROL WIRING FOR THE FIRE SUPPRESSION SYSTEM. COORDINATE WITH FIRE SUPPRESSION VENDOR FOR ALL REQUIREMENTS.

6 KITCHEN HOOD AND FIRE SUPPRESSION CONTROL TYPICAL DETAIL

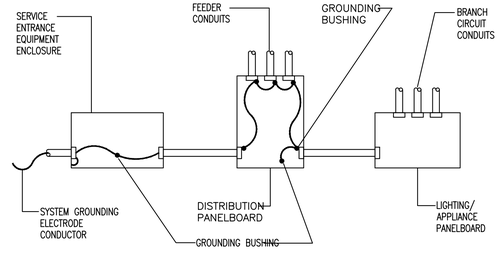

RACEWAY EQUIPMENT

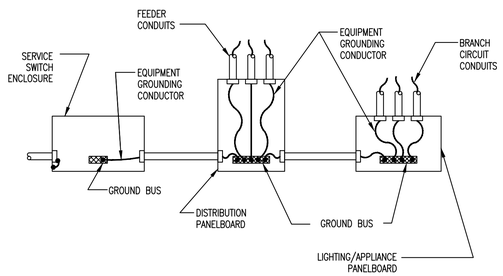

SEPARATE CONDUCTOR EQUIPMENT

7 GROUNDING SYSTEM

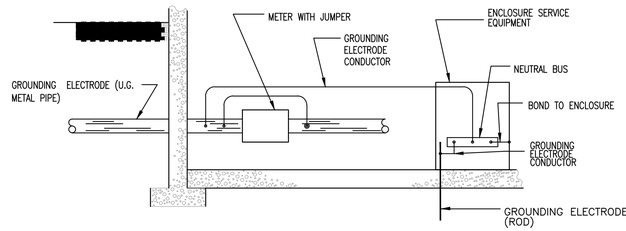

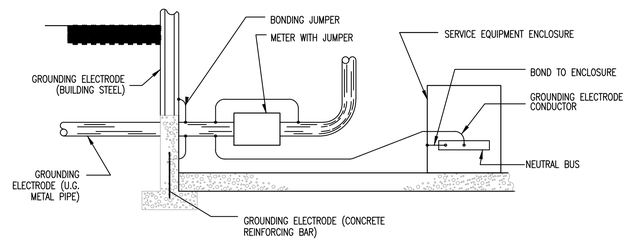

8 GROUNDING ELECTRODE SYSTEM

GENERAL NOTES:
FOR EXACT QUANTITY, SIZE, LOCATION, ETC., FOR CONDUITS SEE PLAN DRAWINGS. DETAIL IS TYPICAL FOR CONDUITS SUSPENDED FROM BUILDING STEEL ABOVE.

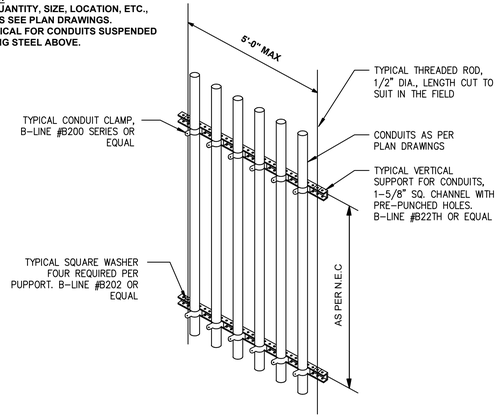

9 VERTICAL CONDUIT SUPPORT

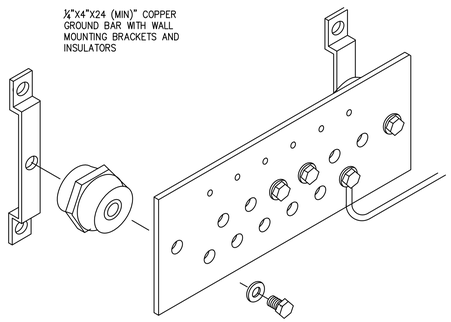

10 GROUND BUS-BAR DETAIL

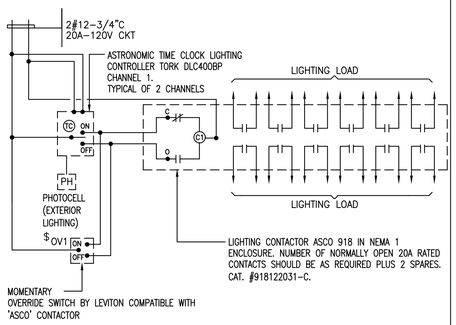

1. WIRING DIAGRAM AS INDICATED TO OUTLINE GENERAL INSTALLATION AND WIRING REQUIREMENTS ONLY. TYPICAL FOR FOUR CHANNEL.
2. PROVIDE 'ASCO' ACCESSORY 47 TO UTILIZE 2-WIRE CONTROL AS REQUIRED.
3. FOR CIRCUITRY INFORMATION SEE SCHEDULE THIS DRAWING.
4. LOCATION OF TIME CLOCK AND ASCO CONTACTOR BY ELECTRICAL PANELS. REFR TO LIGHTING DRAWINGS
5. LOCATION OF OVERRIDE SWITCHES AND PHOTOCELLS TO BE COORDINATED WITH ARCHITECT.

11 LIGHTING TIME CLOCK WIRING DIAGRAM

FIFIELD |PIAKER |ELMAN
ARCHITECTS, PC

740 Broadway, Suite 601
New York, NY 10003
tel 212 979 9272
www.fpe-architects.com

NO USE, REPRODUCTION OR DISSEMINATION MAY BE MADE OF THIS DRAWING & CONCEPTS SET FORTH HEREON WITHOUT THE PRIOR WRITTEN CONSENT OF

FIFIELD PIAKER ELMAN ARCHITECTS P.C. COPYRIGHT © 2023

MEP CONSULTANT:
AVCON ENGINEERING PC

AVCON ENGINEERING
580 8TH AVE, 14TH FLOOR
NEW YORK, NY 10018
PH: (646) 572-0488

Project:
CHABAD DOWNTOWN

30 WALL STREET
BINGHAMTON, NY 13901

No:	Description:	Date:
06	100% CD SET / BID AND PERMIT	08/19/25
05	100% REVIEW SET	06/16/25
04	95% CD SET	01/20/25
03	80% COORDINATION SET	08/07/24
02	ISSUED FOR PROGRESS	12/01/23
01	ISSUED FOR REVIEW	10/05/23

Revisions:

Job No: 10015
Scale: AS SHOWN
Date: 10/02/23
Drawn: TL

Sheet Title:
ELECTRICAL DETAILS II

Drawing No.:
E-701

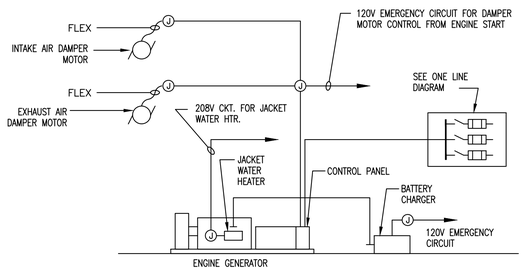

12 GENERATOR ACCESSORIES

IMPORTANT
THE DETAIL BELOW SHOWS THE GENERAL INSTALLATION METHOD.

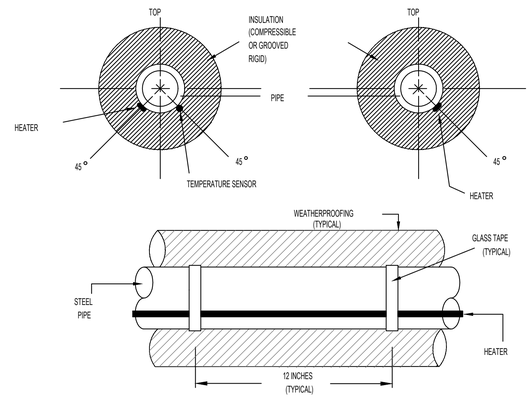

13 TYPICAL PLACEMENT OF HEAT TRACE AND TEMPERATURE SENSOR

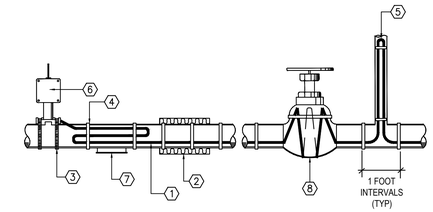

NOTES:

1. HEATING CABLE
2. INSULATION
3. STAINLESS STEEL CLAMPS
4. FIBERGLASS TAPE
5. HEATING CABLE LOOP
6. POWER CONNECTION KIT WITH CABLE POWER SEAL KIT
7. PIPE SUPPORT
8. VALVE

HEATING CABLE POWER CONNECTIONS AND END SEALS ARE REQUIRED FOR EACH HEATER.

14 HEAT TRACING DETAIL

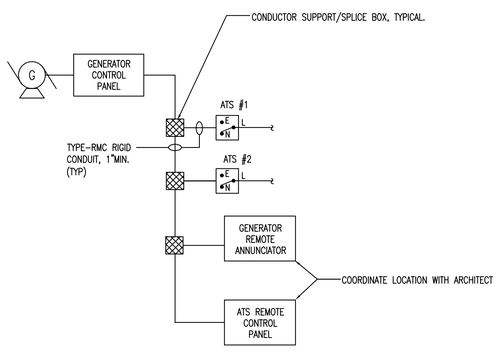

NOTES:

1. CONTRACTOR SHALL COORDINATE ALL CONTROLS WIRING REQUIREMENTS WITH VENDORS OF ALL EQUIPMENT.
2. CONTRACTOR TO SUBMIT DETAILED, POINT-TO-POINT WIRING DIAGRAM TO ENGINEER FOR REVIEW & APPROVAL.
3. ALL CONTROL WIRING SHALL MEET THE REQUIREMENTS OF NFPA 70, ARTICLE 700.9(D); INCLUDING ROUTING AND PROTECTION REQUIREMENTS.
4. AC POWER TO ALL CONTROLS SHALL BE FROM LOAD SIDE OF EMERGENCY POWER ATS.
5. QUANTITY OF ATS, DESIGNATIONS AND LOADS SERVED ARE TYPICAL. REFER TO ELECTRICAL ONE-LINE / RISER DIAGRAMS AND OTHER CONTRACT DOCUMENTS FOR SPECIFIC INFORMATION.

15 TYPICAL GENERATOR CONTROLS WIRING DIAGRAM

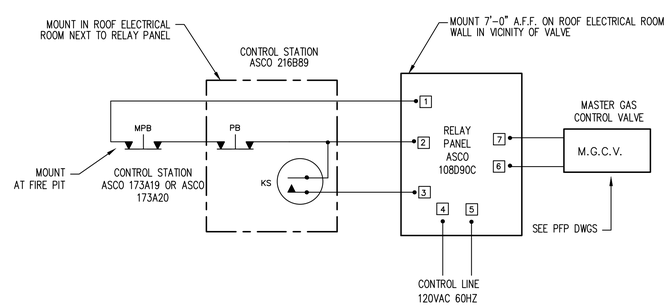

SYMB	ABB	DESCRIPTION
	MPB	MUSHROOM TYPE PUSHBUTTON SWITCH
K	PB KS	PUSHBUTTON SWITCH KEY-OPERATED SWITCH

16 MASTER GAS CONTROL VALVE SCHEMATIC WIRING DIAGRAM

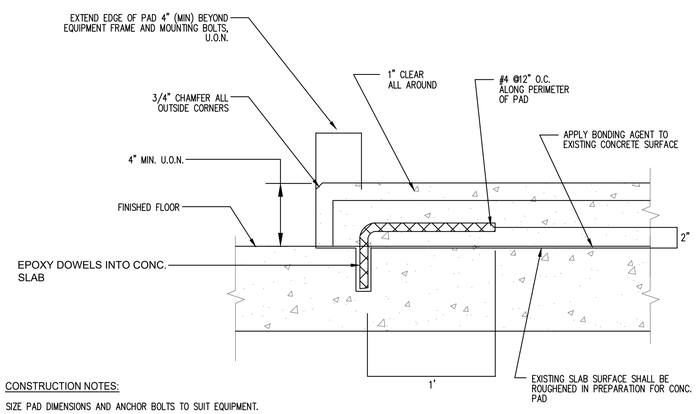

CONSTRUCTION NOTES:

SIZE PAD DIMENSIONS AND ANCHOR BOLTS TO SUIT EQUIPMENT.

PROVIDE 3000 PSI CONCRETE MINIMUM.

PROVIDE SMOOTH AND LEVEL FINISH WITH STEEL TROWEL OR FLOAT.

17 CONCRETE HOUSEKEEPING PAD DETAIL

FIFIELD |PIAKER |ELMAN
ARCHITECTS, PC

740 Broadway, Suite 601
New York, NY 10003
tel 212 979 9272
www.fpe-architects.com

NO USE, REPRODUCTION OR DISSEMINATION MAY BE MADE OF THIS DRAWING & CONCEPTS SET FORTH HEREON WITHOUT THE PRIOR WRITTEN CONSENT OF

FIFIELD PIAKER ELMAN ARCHITECTS P.C. COPYRIGHT © 2023

MEP CONSULTANT:
AVCON ENGINEERING PC

AVCON ENGINEERING
580 8TH AVE, 14TH FLOOR
NEW YORK, NY 10018
PH: (646) 572-0488

Project:
CHABAD DOWNTOWN

30 WALL STREET
BINGHAMTON, NY 13901

No:	Description:	Date:
06	100% CD SET / BID AND PERMIT	08/19/25
05	100% REVIEW SET	06/16/25
04	95% CD SET	01/20/25
03	80% COORDINATION SET	08/07/24
02	ISSUED FOR PROGRESS	12/01/23
01	ISSUED FOR REVIEW	10/05/23

Revisions:

Job No: 10015
Scale: AS SHOWN
Date: 10/02/23
Drawn: TL

Sheet Title:
ELECTRICAL DETAILS III

Drawing No.:
E-702

ELECTRICAL SPECIFICATION

PART 1 GENERAL

1.01 GENERAL REQUIREMENTS:

A. ALL WORK SHALL COMPLY WITH REQUIREMENTS OF THE NEW YORK STATE ELECTRIC CODE, THE NEW YORK STATE BUILDING CODE, BUILDING MANAGEMENT AND ALL AUTHORITIES HAVING JURISDICTION (AHJ). APPLICABLE NATIONAL, STATE AND LOCAL CODES, LAWS AND REGULATIONS GOVERNING OR RELATING TO ANY PORTION OF THIS WORK SHALL BE INCORPORATED INTO AND MADE A PART OF THESE SPECIFICATIONS.

B. IF A CONFLICT OCCURS IN THE SPECIFICATIONS AND/OR ON THE DRAWINGS, THE MORE STRINGENT SITUATION SHALL APPLY.

C. ALL MATERIALS AND WORKMANSHIP SHALL BE GUARANTEED FOR A PERIOD OF ONE YEAR FROM DATE OF FINAL ACCEPTANCE OF THIS WORK. FINAL ACCEPTANCE SHALL BE DEFINED AS THE TIME AT WHICH THE ELECTRICAL WORK IS TAKEN OVER AND ACCEPTED BY THE OWNER. ENGAGE THE SERVICES OF VARIOUS MANUFACTURERS SUPPLYING THE EQUIPMENT FOR THE PROPER STARTUP, OPERATION AND TRAINING OF ALL SYSTEMS INSTALLED. INSTRUCT THE OWNERS PERSONNEL IN THE PROPER OPERATION AND SERVICING OF THE EQUIPMENT.

D. ELECTRICAL CONTRACTOR SHALL VISIT AND EXAMINE CAREFULLY THE EXISTING AREAS AFFECTED BY THIS WORK TO BECOME FAMILIAR WITH EXISTING CONDITIONS AND WITH DIFFICULTIES THAT WILL ATTEND THE EXECUTION OF THE WORK. CONTRACTOR SHALL PERFORM THIS, PRIOR TO SUBMITTING HIS PROPOSAL. SUBMISSION OF A PROPOSAL WILL BE CONSTRUED AS EVIDENCE THAT SUCH AN EXAMINATION HAS BEEN MADE AND LATER CLAIMS WILL NOT BE RECOGNIZED FOR EXTRA LABOR, EQUIPMENT OR MATERIALS REQUIRED BECAUSE OF DIFFICULTIES ENCOUNTERED WHICH COULD HAVE BEEN FORESEEN HAD SUCH AN EXAMINATION BEEN UNDERTAKEN.

E. DRAWINGS ARE DIAGRAMMATIC AND INDICATE GENERAL ARRANGEMENT OF WORK. REFER TO ARCHITECTURAL DRAWINGS FOR EXACT LOCATIONS OF ALL DEVICES INCLUDING DIMENSIONS AND ELEVATIONS. WORK SHALL BE COORDINATED WITH OTHER TRADES TO AVOID CONFLICTS.

F. ALTHOUGH NOT SPECIFICALLY MENTIONED HEREIN OR SHOWN ON THE DRAWINGS, ANY EQUIPMENT, MATERIALS, ACCESSORIES, OR LABOR REQUIRED FOR PROPER AND COMPLETE INSTALLATION OF THE ELECTRICAL WORK SHALL BE FURNISHED AND INSTALLED AS PART OF THE ORIGINAL BID.

G. THIS CONTRACTOR SHALL BE RESPONSIBLE FOR OBTAINING THE LATEST COPY OF THE BUILDING RULES AND REGULATIONS TO DETERMINE THE EXTENT OF PREMIUM TIME WORK REQUIRED. BASE BUILDING SYSTEM INTERRUPTIONS ARE TO BE PERFORMED OUTSIDE OF NORMAL BUSINESS HOURS. COORDINATE WITH BUILDING OWNER FOR ANY SERVICE INTERRUPTION OF EXISTING SYSTEMS AND GIVE NOTICE AS REQUIRED BY BUILDING RULES AND REGULATIONS.

H. ANY DAMAGE TO EXISTING PARTITIONS, FLOORS, CEILINGS OR ANY PART OF THE BUILDING OR EQUIPMENT HOUSED THEREIN CAUSED BY THE WORK OF THE CONTRACTOR SHALL BE REPAIRED AT NO ADDITIONAL EXPENSE TO THE OWNER.

I. ALL NEW MATERIALS REQUIRED SHALL CONFORM WITH THE STANDARDS OF THE UNDERWRITERS LABORATORIES, INC. (UL) IN EVERY CASE WHERE SUCH A STANDARD EXISTS.

J. DURING THE PROJECT DURATION, THE BUILDING MANAGEMENT OFFICE AND ITS DESIGNATED REPRESENTATIVE SHALL BE ABLE TO INSPECT THE WORK IN PROGRESS. ANY WORK WHICH THE BUILDING MANAGEMENT DEEMS UNACCEPTABLE SHALL BE REMOVED AND REPLACED AT THE EXPENSE OF CONTRACTOR/TENANT.

K. ALL EQUIPMENT INSTALLED OR CONNECTED INTO THE BUILDING RISERS, SYSTEMS, AND INFRASTRUCTURE SHALL BE APPROVED IN ADVANCE BY THE BUILDING PRIOR TO INSTALLATION.

1.02 SCOPE OF WORK:

A. PROVIDE ALL LABOR, MATERIALS AND EQUIPMENT NECESSARY FOR COMPLETE, SAFE INSTALLATION OF ALL ELECTRICAL WORK. THE SCOPE OF WORK SHALL INCLUDE, BUT NOT BE LIMITED TO, THE FOLLOWING:

1. INSTALLATION OF LIGHTING FIXTURES AND LAMPS INCLUDING EXIT AND EMERGENCY LIGHTING.
2. INSTALLATION OF WALL SWITCHES, RECEPTACLES, VOICE/DATA, OUTLETS, ETC.
3. INSTALLATION OF NEW RACEWAY AND CONDUCTORS FOR LIGHTING AND POWER.
4. ADDITION OR MODIFICATION OF EXISTING ELECTRICAL DISTRIBUTION EQUIPMENT.
5. INSTALLATION OF MECHANICAL EQUIPMENT FEEDERS AND FINAL CONNECTIONS TO MECHANICAL EQUIPMENT.
6. GROUNDING OF ALL EQUIPMENT AS REQUIRED BY CODE AND AS SPECIFIED.
7. MODIFICATION OF EXISTING FIRE ALARM SYSTEM.
8. TEMPORARY LIGHTING AND POWER DURING CONSTRUCTION.
9. CUTTING, CHANNELING, CORING, AND CHASING REQUIRED TO ACCOMMODATE ELECTRIC INSTALLATION AND ROUGH PATCHING.
10. DEMOLITION AND REMOVAL OF ELECTRICAL EQUIPMENT AS REQUIRED INCLUDING ALL CONDUCTORS AND CONDUIT BACK TO THEIR SOURCE.
11. MAINTENANCE AND PROPER OPERATION OF EXISTING BASE BUILDING SYSTEMS WITHIN THE CONTRACT AREA IN ACCORDANCE WITH THE REQUIREMENTS OF BUILDING MANAGEMENT.
12. PROVISION OF SECURITY SYSTEM INFRASTRUCTURE AS DETAILED.
13. PROVISION OF AUDIO VISUAL SYSTEM INFRASTRUCTURE AS DETAILED.
14. RECEIPT AND INSTALLATION OF DEVICES, EQUIPMENT, SYSTEMS, SUPPLIED BY OTHERS AS DETAILED.
15. COORDINATION WITH OTHER TRADES.

1.03 SUBSTITUTIONS:

A. NO SUBSTITUTE MATERIAL OR MANUFACTURER OF EQUIPMENT SHALL BE PERMITTED WITHOUT A FORMAL WRITTEN SUBMITTAL TO THE ENGINEER WHICH INCLUDES ALL DIMENSIONAL, PERFORMANCE AND MATERIAL SPECIFICATIONS. ANY CHANGES IN LAYOUT, MECHANICAL CHARACTERISTICS, STRUCTURAL REQUIREMENTS, OR DESIGN DUE TO THE USE OF A SUBSTITUTION SHALL BE SUBMITTED TO THE ENGINEER AS PART OF THIS PROPOSAL. THE CONTRACTOR TAKES FULL RESPONSIBILITY FOR THE SUBSTITUTION AND ALL CHANGES RESULTING FROM SUBSTITUTION. ALL ITEMS SHALL BE SUBMITTED FOR REVIEW IN CONJUNCTION WITH THE SUBMITTAL OF THE ALTERNATE. ANY SUBSTITUTION MUST BE SUBMITTED WITH AN EXPLANATION WHY SUBSTITUTION IS BEING UTILIZED. IF THE SUBSTITUTED ITEM DEVIATES FROM THE SPECIFIED ITEM, THOSE DEVIATIONS ARE TO BE IDENTIFIED ON A LINE BY LINE BASIS. IF THE SUBSTITUTION IS BEING UTILIZED FOR FINANCIAL REASONS, THE ASSOCIATED CREDIT MUST BE SIMULTANEOUSLY SUBMITTED.

B. ALL SUBSTITUTED EQUIPMENT SHALL CONFORM TO SPACE REQUIREMENTS AND PERFORMANCE REQUIREMENTS SHOWN ON CONTRACT DOCUMENTS.

C. CONTRACTOR SHALL SUBMIT BID BASED ON SPECIFIED ITEMS AND SHALL SUPPLY AS AN ALTERNATE PRICE ANY SUBSTITUTIONS.

D. ALL EQUIPMENT SHALL BE APPROVED FOR USE IN NEW YORK STATE.

1.04 SHOP DRAWINGS:

A. SHOP DRAWINGS SUBMISSION SHALL INCLUDE, BUT NOT BE LIMITED TO, THE FOLLOWING:

1. DISTRIBUTION EQUIPMENT (PANELS, SWITCHES, ETC.).
2. OVERCURRENT PROTECTIVE DEVICES (FUSES AND BREAKERS).
3. LIGHTING FIXTURES.
4. WIRING DEVICES.
5. FIRE ALARM EQUIPMENT, WIRING SCHEMATIC AND SEQUENCE OF OPERATION.
6. COORDINATION DRAWINGS OF ELECTRIC CLOSET LAYOUTS INCLUDING ELEVATIONS AND MOUNTING DETAILS OF PANELBOARDS, TRANSFORMERS, ETC.
7. FLOOR BOXES/ POKE THRU DEVICES.
8. GROUNDING EQUIPMENT/DEVICES.
9. CONDUIT, RACEWAYS, WIREWAYS
10. WIRING
11. LIGHTING CONTROL SYSTEMS
12. TESTING AND COMMISSIONING SCHEDULE.
13. SCALED FIELD DRAWINGS.

B. PROVIDE A MINIMUM OF THREE (3) COPIES OF 8-1/2"x 11" SUBMISSIONS AND TWO (2) SETS OF ALL DRAWINGS.

1.05 AS-BUILT DRAWINGS:

A. CONTRACTOR SHALL MAINTAIN RECORD DRAWING PRINTS ON JOB SITE AND RECORD, AT TIME OF OCCURRENCE, DEVIATIONS FROM CONTRACT DOCUMENTS.

B. CONTRACTOR SHALL REVISE SHOP DRAWINGS TO CONFORM TO RECORD DRAWINGS AND SUBMIT AN AS-BUILT CONDITION (DEVICES, EQUIPMENT, CIRCUITRY, ETC.) DRAWINGS, IN AUTOCAD FORMAT, UPON COMPLETION OF THE PROJECT. FINAL SUBMISSION OF AS-BUILT DRAWINGS TO BE CERTIFIED BY INSTALLING CONTRACTOR. LANDLORD TO RECEIVE ONE HARD COPY SET AND AUTOCAD DWG FORMAT DRAWINGS ON DISC OF AS-BUILT DRAWINGS.

1.06 UNIT PRICES:

A. SUBMIT THE FOLLOWING LIST OF UNIT PRICES:

1. LIGHT FIXTURES -FOR EACH TYPE SPECIFIED ON DRAWINGS ($/FIXTURE).
2. RECEPTACLES - ADD/DEDUCT PRICE FOR EACH TYPE SPECIFIED ON DRAWINGS ($/RECEPTACLE).
3. DATA/TELEPHONE OUTLET -ADD/DEDUCT PRICE FOR WALL MOUNTED TELEPHONE OUTLET WITH 1" CONDUIT STUBBED INTO HUNG CEILING ($/OUTLET).
4. RACEWAYS - ALL SIZES ON PROJECT ($/LIN FT), CONDUCTORS ($/LIN FT),
5. FIRE ALARM DEVICES.
6. ELECTRICAL PANELS - ALL TYPES INDICATED ON DRAWINGS.

PART 2 PRODUCT/APPLICATION

2.01 WIRING DEVICES:

A. WIRING DEVICES SHALL BE SPECIFICATION GRADE, DECORATIVE STYLE, UNLESS OTHERWISE NOTED.

B. SWITCHES SHALL BE 120/277 VOLTS, RATED AT 20 AMPERES, QUIET OPERATION ROCKER TYPE.

C. MULTIPLE DEVICES AT A COMMON LOCATION SHALL BE INSTALLED IN A COMMON MULTI-GANG BOX WITH A COMMON FACEPLATE. DERATE DIMMER SWITCHES PER MANUFACTURER'S REQUIREMENTS WHEN GANGED.

D. RECEPTACLE SHALL BE 120V, 20A, 2P, 3W GROUNDING TYPE.

E. DEVICES GANGED TOGETHER IN MULTI-GANG BOX SHALL BE MOUNTED UNDER A SINGLE COVERPLATE.

5. DRAWINGS AND SPECIFICATIONS

THE SPECIFICATIONS AND ACCOMPANYING DRAWINGS ARE INTENDED TO DESCRIBE THE SCOPE OF ALL ELECTRIC/MECHANICAL WORK. THE DRAWINGS ARE AN OUTLINE TO INDICATE THE APPROXIMATE LOCATION AND ARRANGEMENT OF RACEWAYS, WIRING AND EQUIPMENT. THE DRAWINGS SHALL BE FOLLOWED AS CLOSELY AS POSSIBLE IN EXECUTING OF THE WORK. SHOULD THERE BE A CONFLICT BETWEEN DRAWINGS AND SPECIFICATIONS, THIS CONTRACTOR SHALL REFER THE MATTER TO THE OWNER'S REPRESENTATIVE FOR A DECISION AS TO METHOD OR MATERIAL. ELECTRICAL CONTRACTOR SHALL REFER TO DRAWINGS OF ALL OTHER TRADES FOR DETAILS, DIMENSIONS AND LOCATIONS OF OTHER WORK AND ROUTE HIS WORK SO AS NOT TO CONFLICT WITH ANY OTHER BRANCH. THIS CONTRACTOR SHALL BE RESPONSIBLE FOR CHECKING QUANTITIES OF EQUIPMENT MENTIONED IN THE SPECIFICATIONS WITH THOSE SHOWN ON THE DRAWINGS. IF DISCREPANCIES ARE NOTED, PROVIDE THE GREATER OF THE QUANTITIES OR THE BETTER OF THE QUALITIES AS APPLICABLE.

6. MATERIALS AND EQUIPMENT

ALL MATERIALS AND EQUIPMENT SHALL BE NEW. ALL MATERIALS, APPARATUS AND EQUIPMENT SHALL BEAR THE UNDERWRITER'S LABORATORIES INC., LABEL WHERE REGULARLY SUPPLIED. CERTAIN MANUFACTURERS OF MATERIAL AND EQUIPMENT ARE SPECIFIED AND PLANS ARE DETAILED ACCORDING TO THIS MATERIAL. THIS CONTRACTOR SHALL BASE HIS BID ON FURNISHING AND INSTALLING THIS MAKE OF MATERIAL AND EQUIPMENT. WHERE MORE THAN ONE MAKE OF MATERIAL OR EQUIPMENT IS SPECIFIED, THE CONTRACTOR SHALL STATE IN HIS BID WHICH MAKE HE PROPOSES TO FURNISH.

7. ELECTRICAL IDENTIFICATION

PROVIDE MANUFACTURER'S STANDARD SELF-ADHESIVE VINYL TAPE NOT LESS THAN 3 MILS THICK BY 1-1/2" WIDE. WHERE APPLICABLE, INSTALL ON ALL CONCEALED RACEWAYS AT CONNECTION TO ALL JUNCTION BOXES, PULL BOXES, EQUIPMENT, WALL/FLOOR/, ETC. UNLESS OTHERWISE INDICATED OR REQUIRED BY GOVERNING REGULATIONS, PROVIDE ORANGE TAPE WITH BLACK LETTERS.

PROVIDE CIRCUIT IDENTIFICATION BANDS FOR ALL CABLES AND CONDUCTORS. PROVIDE MANUFACTURER'S STANDARD COLOR CODING FOR CABLE/CONDUCTOR JACKET AND/OR INSULATION FOR ALL CABLES AND CONDUCTORS OF ALL SYSTEMS. MATCH IDENTIFICATION WITH MARKING SYSTEM USED IN EXISTING SYSTEMS (WHERE APPLICABLE), SHOP DRAWINGS, CONTRACT DOCUMENTS, AND SIMILAR PREVIOUSLY ESTABLISHED IDENTIFICATION FOR PROJECT'S ELECTRICAL WORK. PROVIDE ON ALL CONDUCTORS OF ALL SYSTEMS.

INSTALL ENGRAVED PLASTIC-LAMINATE SIGN ON MAJOR UNITS OF ELECTRICAL EQUIPMENT, INCLUDING CENTRAL OR MASTER UNIT OF EACH ELECTRICAL SYSTEM INCLUDING COMMUNICATION/CONTROL/SIGNAL SYSTEMS, UNLESS UNIT IS SPECIFIED WITH ITS OWN SELF-EXPLANATORY IDENTIFICATION OR SIGNAL SYSTEM. EXCEPT AS OTHERWISE INDICATED, PROVIDE SINGLE LINE OF TEXT, 1/2" HIGH LETTERING, ON 1-1/2" HIGH SIGN (2" HIGH WHERE 2 LINES ARE REQUIRED), WHITE LETTERING IN BLACK FIELD. UNLESS DETERMINED OTHERWISE IN FIELD, PROVIDE TEXT MATCHING TERMINOLOGY AND NUMBERING OF THE CONTRACT DOCUMENTS AND SHOP DRAWINGS. SECURE TO SUBSTRATE WITH FASTENERS, EXCEPT USE ADHESIVE WHERE FASTENERS SHOULD NOT OR CANNOT PENETRATE SUBSTRATE. AS A MINIMUM PROVIDE SIGNS FOR EACH UNIT OF THE FOLLOWING CATEGORIES OF ELECTRICAL WORK WHERE SUCH WORK EXISTS ON THE PROJECT ALL STARTERS AND DISCONNECTS; ALL REMOTE FIXTURE OR EQUIPMENT SWITCHING DEVICES (VIA ENGRAVED WALLPLATES); ALL SYSTEM DEVICES, PORTS, TAPS, J.B.'S, P.B.S, ETC.; PANELBOARDS, ELECTRICAL CABINETS; ANY OTHER EQUIPMENT DESIGNATED BY OWNER OR ENGINEER IN FIELD.

ALL EQUIPMENT & SYSTEM IDENTIFICATION NOMENCLATURE SHOWN ON DRAWINGS OR LISTED HEREIN IS SHOWN FOR GENERAL DESIGN AND INSTALLATION REFERENCE ONLY. THE ACTUAL NAMEPLATE, ETC. NOMENCLATURE FOR THIS PROJECT SHALL BE VERIFIED BY ELECTRICAL CONTRACTOR IN FIELD PRIOR TO FABRICATION AND WHERE APPLICABLE, SHALL BE AN EXTENSION OF EXISTING NOMENCLATURE USED ON THE SITE AS DETERMINED IN FIELD BY ELECTRICAL CONTRACTOR.

IN ADDITION TO THE ABOVE, ALL LABELING FOR ALL ELECTRICAL WIRING WORK (FOR ALL SYSTEMS) SHALL BE 3M DCI NO. 054007-11954 "SWD" WRITE-ON TAPE DISPENSER KIT WITH FACTORY PROVIDED SPECIAL FAST DRYING MARKER INCLUDED WITH KIT. ALL MARKINGS SHALL BE CLEAR AND LEGIBLE.

AS DETERMINED IN FIELD, PROVIDE COLOR-CODING FOR JUNCTION BOXES, PULL BOXES AND ASSOCIATED PLATES TO MATCH EXISTING BUILDING STANDARDS. THE FOLLOWING INSULATION COLOR CODE SHALL BE USED FOR SYSTEM AND VOLTAGE IDENTIFICATION FOR FEEDER AND BRANCH CIRCUIT WIRING.

480Y/277V SYSTEM - BROWN, ORANGE, YELLOW & GRAY (NEUT.) 208Y/120V SYSTEM - BLACK, RED, BLUE & GRAY (NEUT.) EQUIPMENT GROUNDING - GREEN EQUIPMENT GROUNDING - GREEN SYSTEMS - TO MATCH EXISTING - VERIFY IN FIELD. SYSTEMS - TO MATCH EXISTING - VERIFY IN FIELD.

8. GROUNDING

ALL METALLIC CONDUIT, SURFACE WIREWAYS, SUPPORTS, CABINET AND EQUIPMENT SHALL BE GROUNDED IN ACCORDANCE WITH THE LATEST ISSUE OF THE NATIONAL ELECTRICAL CODE AND SHOWN ON PLANS. THE GROUND TERMINALS OF RECEPTACLES SHALL BE CONNECTED TO THE EQUIPMENT GROUND BUS OF THE SOURCE BRANCH CIRCUIT PANELBOARD. ALL GROUNDING CONDUCTORS SHALL BE PROTECTED FROM MECHANICAL INJURY. ALL CONNECTIONS TO EQUIPMENT OR CONDUIT SHALL BE MAKE WITH AN APPROVED CONDUCTOR AND SAME SHALL BE BOLTED OR CLAMPED TO EQUIPMENT AND CONDUIT. ALL CONTACT SURFACES SHALL BE THOROUGHLY CLEANED AND BRIGHT BEFORE CONNECTIONS TO INSURE A GOOD METAL CONTACT.

9. CONDUIT AND FITTINGS

ALL WIRING FOR DIFFERENT POWER VOLTAGES SHALL BE INSTALLED IN RACEWAY SYSTEMS SEPARATE FROM EACH OTHER (I.E. 24V SEPARATE FROM 120/208V).

ONLY VOICE AND DATA CABLES MAY SHARE RACEWAYS. ALL WIRING RUN IN FINISHED SPACES SHALL BE RUN IN WIREMOLD STEEL RACEWAY.

ALL CONDUIT INSTALLED INDOORS SHALL BE GALVANIZED STEEL EMT (3/4" MINIMUM); ALL FITTINGS FOR SAME SHALL BE SET SCREW TYPE STEEL, WITH INSULATED THROATS. ALL WIRING OF ALL SYSTEMS SHALL BE INSTALLED IN CONDUIT UNLESS SPECIFICALLY INDICATED OTHERWISE HEREIN OR ON DRAWINGS.

CONDUIT RUNS EXCEEDING 100 FEET IN LENGTH OR HAVING IN EXCESS OF THREE 90 DEGREE TURNS SHALL BE PROVIDED WITH PULL BOXES. CONDUIT FILL SHALL NOT EXCEED 30 PERCENT. ALL CONDUIT SYSTEMS (INCLUDING J.B.'S, P.B.'S, ETC.) SHALL BE PERMANENTLY IDENTIFIED. NEW BRANCH CIRCUIT HOME-RUN CONDUITS SHALL BE NO LARGER THAN 1-1/4" DIAMETER. CONDUIT FILL SHALL NOT EXCEED NEC REQUIREMENTS.

CONDUIT SHALL BE CLEANED INSIDE BEFORE ANY WIRES ARE PULLED. CONDUIT ENDS SHALL BE CAPPED AND PLUGGED WITH STANDARD ACCESSORIES AS SOON AS CONDUIT HAS BEEN PERMANENTLY INSTALLED. CONDUIT INSTALLED WITHOUT CONDUCTORS SHALL BE PROVIDED

WITH SWEEP BENDS AND BALING WIRE FOR PULLING. ALL JOINTS SHALL BE MADE TIGHT WITH WATERTIGHT COUPLINGS MATCHING CONDUIT AND ALL CORNERS SHALL BE MAKE WITH LONG RADIUS. THE ENDS OF ALL CONDUITS SHALL BE CUT SQUARE AND REAMED AND ALL JOINTS BROUGHT TO A SHOULDER. CONDUIT SHALL BE CONTINUOUS BETWEEN OUTLETS TO MAKE A COMPLETE INSTALLATION AND TO EFFECT A CONTINUOUS GROUND. SUITABLE SUPPORTS AND FASTENING SHALL BE PROVIDED FOR CONDUIT. CONDUIT SHALL BE SUPPORTED BY APPROVED STRAPS, FASTENERS AND HANGERS. HANGERS SHALL BE SUSPENDED FROM RODS. PERFORATED STRAPS WILL NOT BE ACCEPTABLE. FASTENERS SHALL BE LEAD EXPANSION SHIELDS IN BLOCK OR CONCRETE, TOGGLE BOLTS IN HOLLOW WALLS, MACHINE SCREWS ON METAL SURFACES AND WOOD SCREWS ON WOOD CONSTRUCTION. ALL CONDUIT SHALL BE SUPPORTED INDEPENDENTLY FROM ALL OTHER BUILDING SYSTEMS AND SHALL BE SUPPORTED DIRECTLY FROM STRUCTURAL COMPONENTS.

PROVIDE SLEEVES FOR ALL FIREWALL AND SMOKE PARTITION PENETRATIONS (SEALED ACCORDINGLY). ALL RACEWAYS SHALL BE ENTIRELY FREE OF PLASTER, MORTAR, WATER AND OTHER FOREIGN MATTER. RACEWAYS INSTALLED UNDER THIS CONTRACT WITHOUT CONDUCTORS SHALL HAVE BALING WIRE LEFT IN RACEWAYS FROM OUTLET TO OUTLET FOR FUTURE PULLING OF CONDUCTORS. RACEWAYS OPEN ENDS SHALL BE PLUGGED OR CAPPED IN AN APPROVED MANNER.

10. METHOD OF WIRING - POWER

BRANCH SUB FEEDER CIRCUITS SHALL BE INSTALLED AS SHOWN ON THE FLOOR PLANS. WHERE OUTLETS ARE INDICATED BY LETTERS ON PLANS, THEY SHALL BE CONTROLLED BY CORRESPONDING SWITCHES. NO WIRE SIZE SMALLER THAN NO. 12 SHALL BE USED FOR ANY BRANCH CIRCUIT UNLESS OTHERWISE NOTED ON PLANS FOR CONTROL CIRCUITS. LARGER SIZES SHALL BE USED WHERE REQUIRED AND/OR INDICATED ON THE PLANS. DISTANCES FROM PANEL TO FIRST OUTLET OF A 15 OR 20 AMPERE BRANCH CIRCUIT SHALL REQUIRE THE FOLLOWING MINIMUM WIRE SIZE TO THE FIRST OUTLET.

UP TO 100 FEET:	#12
100 TO 200 FEET:	#10
MORE THAN 200 FEET:	# 8

ALL BRANCH CIRCUITS MORE THAN 200 FEET IN LENGTH SHALL BE MINIMUM NO. 10 TO THE LAST OUTLET. CONTROL CIRCUITS SHALL BE NO. 14 EXCEPT FOR RUNS EXCEEDING 300 FEET WHERE THEY SHALL BE NO. 12. OUTLETS SHALL BE LOCATED APPROXIMATELY AS SHOWN ON THE PLANS AND SHALL BE WIRED TO PROVIDE CONTROL OF OUTLETS INDICATED. ALL WIRES OF ANY ONE CIRCUIT SHALL BE RUN IN THE SAME CONDUIT. ALL WIRES SHALL BE RUN CONTINUOUS FROM OUTLET TO OUTLET. INSULATION VALUE OF JOINTS TO BE 100% IN EXCESS OF WIRE. MECHANICAL WIRE SPLICERS SHALL BE SCOTCHLOCK INSULATED TYPE, T&B STAKON OR APPROVED EQUAL. THE CONDUCTORS TERMINATING AT EACH WIRED OUTLET SHALL BE LEFT NOT LESS THAN 8" LONG AT THEIR OUTLET FITTINGS TO FACILITATE INSTALLMENT OF DEVICES OF FIXTURES. FRICTION AND RUBBER TAPE CONFORM TO FEDERAL SPECIFICATIONS HH-T-11 AND HH-T-111. PLASTIC ELECTRICAL TAPE SHALL BE SCOTCH #33+ OR APPROVED EQUAL.

11. METHOD OF WIRING - COMMUNICATIONS

ALL WIRING/CABLES OF VOICE/DATA SYSTEMS AND ALL OTHER SYSTEMS SHALL BE INSTALLED IN CONDUIT, 3/4" MINIMUM AS INDICATED ON PLANS AND DETAILS.

OUTLETS SHALL CONSIST OF A FLUSH WALL MOUNTED 4" SQUARE X 2-1/8" DEEP BOX WITH A SINGLE GANG PLASTER RING. MAXIMUM CONDUIT FILL FOR NEW WORK SHALL BE 40%, BASED ON MANUFACTURE'S PUBLISHED DATA OF CABLE OUTSIDE DIAMETER. PROVIDE, CABLE, TERMINATIONS, JACKS, LABELING, HARDWARE, ETC. AS REQUIRED FOR COMPLETE WORKING SYSTEMS.

DETERMINE EXACT LOCATIONS OF COMMUNICATION TECHNOLOGY EQUIPMENT, EQUIPMENT OUTLETS, ETC. IN FIELD. USE CAUTION NOT TO EXCEED THE ALLOWED BENDING RADIUS FOR RESPECTIVE CABLES AND NOT TO COMPROMISE THE INTEGRITY OF THE CABLES DURING INSTALLATION BY PULLING TIE-WRAPS TOO TIGHTLY, DAMAGING CABLES, ETC. RACEWAY/CABLING BENDING RADII SHALL BE MINIMUM AS DIRECTED BY CABLE MANUFACTURER. USE PULLING COMPOUND OR LUBRICANT, WHERE NECESSARY; COMPOUND MUST NOT DETERIORATE CONDUCTOR OR INSULATION. NEATLY DRESS ALL CABLE WORK. WORK SHALL BE INSTALLED IN A MANNER WHICH RESULTS IN MAINTAINING A MINIMUM DISTANCE OF 24 INCHES FROM FEEDER/BRANCH CIRCUIT RACEWAYS AND FROM ANY BALLASTED LIGHTING FIXTURE.

PROVIDE COLOR CODED JACKETS TO IDENTIFY RUNS OF DIFFERENT SYSTEMS. NEATLY ROUTE CABLES PARALLEL AND PERPENDICULAR TO BUILDING ARCHITECTURAL LINES. GROUP CABLES BY SYSTEM TYPE WHEREVER POSSIBLE. VERIFY EXACT LOCATIONS OF TELEPHONE SWITCH, DATA SERVER(S), HEAD-END EQUIPMENT, EQUIPMENT OUTLETS, ETC. IN FIELD.

REVIEW ALL TERMINATION AND LABELING REQUIREMENTS WITH OWNER IN ADVANCE. ALL CABLE SHALL BE PROVIDED WITH PERMANENT ADHESIVE LABELING IDENTIFICATION BY THIS CONTRACTOR. PROVIDE TRANSPARENT ADHESIVE COVERINGS OVER EACH LABEL, WRAPPED AROUND THE LABELS AT LEAST TWO TIMES. THE LONG AXIS OF THE LABELS SHALL INSTALLED BE PARALLEL TO THE LONG AXIS OF THE RESPECTIVE CABLE ASSEMBLIES. LABELS SHALL BE APPROXIMATELY 1-1/2" LONG BY 3/8" HIGH CONDUIT

12. OUTLET, JUNCTION AND SWITCHBOXES

GANG TYPE OUTLET BOXES SHALL NOT BE USED. THE OUTLET BOX LOCATIONS INDICATED ON DRAWINGS SHALL BE CONSIDERED APPROXIMATE, AND THEREFORE, IT SHALL BE INCUMBENT UPON THIS CONTRACTOR TO STUDY THE GENERAL CONSTRUCTION WITH RELATION TO SPACES AND EQUIPMENT SURROUNDING EACH OUTLET. ALL OUTLET, SWITCH AND JUNCTION BOXES SHALL BE MADE OF CODE GALVANIZED STEEL COMPLETE WITH RINGS AND SCREW COVER PLATES AND LOCATED WHERE SHOWN AND NOTED ON DRAWINGS. WHERE CONDUIT IS CONCEALED, BOXES SHALL NOT BE LESS THAN 4" SQUARE X 1-1/2" DEEP. ALL BOXES SHALL BE EQUIPPED WITH PROPER COVERS TO BRING FLUSH WITH FINISHED WALL SURFACE.

WHERE OUTLET BOXES OCCUR IN BLOCK, CINDER, OR CONCRETE BLOCK, FACING TILE OR OTHER MATERIAL WHERE SUCH MATERIALS FORM THE FINISHED WALL SURFACE, THE OPENING FOR THE BOX SHALL BE CUT NEATLY AND OF THE SIZE THAT THE COVER PLATE WILL COVER ALL PARTS OF THE OPENING. IN GENERAL, JUNCTION BOXES SHALL BE FURNISHED AND REQUIRED BY THE NATIONAL ELECTRIC CODE, OF THE PROPER SIZES, AND SHALL BE CONSTRUCTED OF #12 GAUGE STEEL WITH REMOVABLE FRONT FASTENED ON WITH COUNTER SUNK HEAD SCREWS OR OTHER APPROVED MEANS. FOR SPECIAL APPLICATION, JUNCTION BOXES SHALL BE NOTED, DETAILED AND/OR SIZED ON THE DRAWINGS OR IN THE FIELD AS REQUIRED.

13. HEIGHT OF BOXES

PRIOR TO ROUGH-IN, VERIFY ALL BOX/DEVICE MOUNTING HEIGHTS AND LOCATIONS IN FIELD WITH OWNER'S REPRESENTATIVE RELATIVE TO EQUIPMENT BEING SERVED AND RELATIVE TO EXISTING CONDITIONS WHERE APPLICABLE. IN GENERAL, WHERE NOT LOCATED AT COUNTER AREAS, THE HEIGHT OF BOXES FROM FINISHED FLOOR TO CENTER OF BOXES SHALL BE AS FOLLOWS, UNLESS OTHERWISE NOTED ON PLANS:

SWITCHES	4'0" (3'8" IN RESTROOMS)
RECEPTACLES	1'6"
TELEPHONE OUTLETS (DESK PHONE)	1'6"
TELEPHONE OUTLETS (WALL PHONE)	4'0"
DATA CABLE OUTLETS	1'6"
DEVICES AT SPECIAL HEIGHTS	AS DIRECTED IN FIELD.

14. WIRE AND CABLE

FURNISH AND INSTALL ALL NECESSARY CABLE OF THE SIZE AND TYPE INDICATED ON THE DRAWINGS OR SPECIFIED HEREINAFTER. ALL WIRE SHALL BE COPPER. ALL WIRING SHALL BE NEW. NO WIRE SMALLER THAN #12 AWG SHALL BE INSTALLED UNLESS SPECIFICALLY DESIGNATED. USE OF #14 COLOR CODED WIRE WILL BE ALLOWED FOR CONTROL CIRCUITS ONLY. ALL WIRING SHALL BE IN CONDUIT UNLESS SPECIFICALLY INDICATED OTHERWISE HEREIN. ALL CONDUCTORS SHALL BE COPPER. PROVIDE STRANDED CONDUCTORS FOR ALL SIZES UNLESS INDICATED OTHERWISE.

PROVIDE THHN/THWN INSULATION FOR ALL CONDUCTORS SIZE 500 MCM (KCMIL) AND LARGER, AND NO. 8 AWG AND SMALLER. FOR ALL OTHER SIZES PROVIDE THW OR THHN/THWN INSULATION AS APPROPRIATE FOR THE LOCATIONS WHERE INSTALLED. PROVIDE COLOR CODED INSULATION/JACKET FOR PHASE IDENTIFICATION. ALL WIRES SHALL BE RATED AT 600 VOLTS.

KEEP CONDUCTOR SPLICES TO MINIMUM. PULL CONDUCTORS SIMULTANEOUSLY WHERE MORE THAN ONE IS BEING INSTALLED IN SAME RACEWAY. USE UL LISTED PULLING COMPOUND OR LUBRICANT, WHERE NECESSARY. INSTALL SPLICE AND TAP CONNECTORS WHICH POSSESS EQUIVALENT OR BETTER MECHANICAL STRENGTH AND INSULATION RATING THAN CONDUCTORS BEING SPLICED. USE SPLICE AND TAP CONNECTORS WHICH ARE COMPATIBLE WITH CONDUCTOR MATERIAL. INCREASE WIRE SIZES PER NEC TO OFFSET VOLTAGE DROP AS/IF REQUIRED.

CABLE TYPES AC AND NMC ARE NOT PERMITTED.

15. WIRING DEVICES

DEVICE COLORS:

UNLESS INDICATED OTHERWISE WITHIN CONTRACT DOCUMENTS OR DIRECTED OTHERWISE IN FIELD, ALL NORMAL DEVICES SHALL BE WHITE IN COLOR. SPECIFICATION GRADE RECEPTACLES: DUPLEX RECEPTACLES SHALL BE EQUAL TO LEVITON #5362 SERIES (NEMA 5-20R). GROUND FAULT CIRCUIT INTERRUPTER DUPLEX RECEPTACLES SHALL BE EQUAL TO LEVITON #6898 SERIES (NEMA 5-20R). DUPLEX ISOLATED GROUND RECEPTACLES SHALL BE EQUAL TO LEVITON #5362-IG. SPECIAL PURPOSE RECEPTACLES SHALL BE OF THE SIZE, TYPE AND MANUFACTURER AS INDICATED ON THE PLANS OR AS DETERMINED IN FIELD. SWITCHES: SINGLE POLE SWITCHES SHALL BE EQUAL TO LEVITON #1221-2 SERIES. WALL PLATES:

PROVIDE WALL PLATES WITH ENGRAVED LEGENDS WHERE INDICATED ON DRAWINGS AND/OR WHERE REQUIRED PER ELECTRICAL IDENTIFICATION SECTION. ALL DEVICE WALLPLATES SHALL BE STANDARD SIZE; "MIDWAY", "OVERSIZED" ("JUMBO") OR "EXTRA DEEP" WALLPLATES SHALL NOT BE ACCEPTABLE. CONSTRUCT WITH METAL SCREWS FOR SECURING PLATES TO DEVICES; SCREW HEADS COLORED TO MATCH FINISH OF PLATES. WALLPLATES IN FINISHED AREAS SHALL BE COMMERCIAL SPECIFICATION GRADE, SATIN FINISH STAINLESS STEEL, WITH BEVELED EDGES, EQUAL TO LEVITON TYPE 430 SERIES. WALLPLATES IN UNFINISHED AREAS SHALL BE GALVANIZED STEEL.

16. SUPPORTS, INSERTS, CUTTING AND PATCHING

THIS CONTRACTOR SHALL DO ALL CUTTING AND PATCHING REQUIRED FOR THE ADMISSION OF HIS WORK. ANY DAMAGE DONE BY THIS CONTRACTOR TO THE BUILDING DURING THE PROGRESS OF HIS WORK SHALL BE MADE GOOD AT HIS OWN EXPENSE. ALL PATCHING SHALL BE DONE BY A SKILLED CRAFTSMAN IN THAT RESPECTIVE TRADE. IT SHALL BE THE RESPONSIBILITY OF THIS CONTRACTOR TO SUPERVISE THE INSTALLATION OF, AND PAY FOR ALL ADDITIONAL MEMBERS, WOOD OR METAL AND LABOR WHICH MAY BE REQUIRED TO SUPPORT ANY TYPE OF PERMANENT OR TEMPORARY ELECTRICAL APPARATUS EMPLOYED IN THE EXECUTION OF THIS CONTRACTOR'S WORK.

SEAL ALL NEW FLOOR, CEILING, WALL, SLAB, ETC. PENETRATIONS TO MATCH OR EXCEED EXISTING/NEW ASSEMBLY FIRE RATINGS. PROVIDE SLEEVE SEALS FOR ALL SLEEVES; PROVIDE SLEEVES FOR ALL PENETRATIONS. VERIFY REQUIREMENTS IN FIELD. ALL PENETRATIONS OF FIRE- RATED OR SMOKE-RATED WALLS, FLOORS, CEILINGS, ETC. SHALL BE SEALED IMMEDIATELY AFTER RACEWAYS ARE INSTALLED. ALL NEW ELECTRICALLY RELATED WORK SHALL BE SUPPORTED DIRECTLY FROM BUILDING STRUCTURAL MEMBERS. NEW ELECTRICALLY RELATED WORK SHALL NOT BE SUPPORTED FROM DUCTWORK, DUCTWORK HANGERS, CEILING SUPPORTS, EXISTING CONDUIT SUPPORTS, ETC. ALL CONDUITS (AND CABLE ASSEMBLIES, WHERE APPLICABLE) SHALL BE ROUTED PARALLEL TO BUILDING STRUCTURAL MEMBERS. ANY AND ALL NONCOMPLYING WORK INSTALLED BY THE ELECTRICAL CONTRACTOR SHALL BE REMOVED AND REINSTALLED TO THE SATISFACTION OF THE OWNER'S REPRESENTATIVE AND THE ENGINEER, AT THE EXPENSE OF THE ELECTRICAL CONTRACTOR.

17. LIGHTING FIXTURES

ALL SURFACE MOUNTED BALLASTED FIXTURES SHALL BE MOUNTED WITH AIR SPACES BETWEEN FIXTURE AND SURFACE PER LATEST EDITION OF NFPA/NEC. ALL RECESSED FIXTURES SHALL BE EQUIPPED WITH NECESSARY PLASTER FRAMES AND SURFACE TRIM. ALL RECESSED FLUORESCENT FIXTURES SHALL BE EQUIPPED AND SUITABLY CONSTRUCTED TO OPERATE WITH "P" RATED BALLASTS. ALL JUNCTION BOXES AND SERVICEABLE COMPONENTS (BALLASTS, THERMAL PROTECTION DEVICES, FUSES, ETC.) FOR RECESSED FIXTURES SHALL BE READILY ACCESSIBLE FOR SERVICE OR REPLACEMENT FROM BELOW THE CEILING, WITHOUT REMOVING ANY CEILING COMPONENTS (OTHER THAN TILES).

ALL LIGHTING FIXTURES UTILIZED FOR EMERGENCY EGRESS LIGHTING SHALL BE CONNECTED AHEAD OF SWITCHING. ALL BALLASTS OF THE SAME TYPE SHALL BE OF THE SAME MANUFACTURER AND CATALOG NUMBER. ALL LAMPS OF THE SAME TYPE SHALL BE OF THE SAME MANUFACTURER AND CATALOG NUMBER.

PROVIDE LOW ENERGY SOLID STATE RAPID START ELECTRONIC FLUORESCENT LAMP BALLASTS (LESS THAN OR EQUAL TO 20% THD) SPECIFICALLY DESIGNED FOR OPERATING LAMP TYPES INDICATED. FLUORESCENT BALLASTS SHALL BE MOTOROLA OR ADVANCE EQUAL.

INCANDESCENT LAMPS SHALL BE SYLVANIA OR PHILIPS, LONG LIFE TYPE (3000 HOURS). ALL INCANDESCENT LAMPS SHALL BE INSIDE FROSTED UNLESS SPECIFICALLY DIRECTED OTHERWISE. PROVIDE SOCKET ADAPTERS/EXTENDERS IF REQUIRED FOR ACCOMMODATING THE SPECIFIED LAMP.

FLUORESCENT LAMP COLOR TEMPERATURE SHALL BE 3500K. COMPACT FLUORESCENT TWIN TUBE/DUAL TWIN TUBE LAMPS SHALL BE OSRAM OR PHILIPS, 82 CRI, MINIMUM 10,000 HOURS RATED. LONG FLUORESCENT TWIN TUBE LAMPS SHALL BE OSRAM OR PHILIPS, 82 CRI, 3150 INITIAL LUMENS, MINIMUM 20,000 HOURS RATED.

F32T8 FLUORESCENT LAMPS SHALL BE RAPID START, ENERGY SAVING TYPE, MINIMUM 80 CRI, MINIMUM 3200 INITIAL LUMENS AND MINIMUM 20,000 HOURS RATED. LAMPS SHALL BE SYLVANIA, OSRAM OR PHILIPS, EQUAL TO SYLVANIA #FO32/RS.

PROVIDE FIXTURES AND/OR FIXTURE OUTLET BOXES WITH HANGERS TO PROPERLY SUPPORT FIXTURE WEIGHT. ALL LIGHTING FIXTURES INSTALLED IN OR ON SUSPENDED CEILING SYSTEMS SHALL BE ANCHORED DIRECTLY TO THE BUILDING STRUCTURAL SYSTEM ABOVE (ANCHORED PER NEC). SUCH ANCHORING SHALL BE INDEPENDENT OF THE CEILING SUPPORT SYSTEM. ALL FIXTURES SHALL BE INSTALLED PLUMB AND LEVEL. SUPPORT SURFACE MOUNTED FIXTURES GREATER THAN 2 FEET IN LENGTH AT A POINT IN ADDITION TO THE OUTLET BOX FIXTURE STUD.

18. MECHANICAL EQUIPMENT

PROVIDE ALL CONDUIT AND OUTLET BOXES AS REQUIRED FOR ALL CONTROL WIRING AND THERMOSTATS. FURNISH AND INSTALL POWER WIRING AND MAKE LINE CONNECTIONS TO ALL HEATING, VENTILATING AND AIR CONDITIONING EQUIPMENT. ELECTRICAL CONTRACTOR SHALL EXAMINE THE APPROVED DRAWINGS OF ALL BRANCHES AND SHALL WIRE AND CONNECT ALL MOTORS, DISCONNECTS, CONTROL DEVICES AND OTHER ITEMS REQUIRING ELECTRICITY FOR OPERATION. THIS CONTRACTOR SHALL MAKE THE NECESSARY ELECTRICAL CONNECTIONS BETWEEN THE SPECIFIED EQUIPMENT AND THE JUNCTION BOX NEAR EQUIPMENT WITH FLEXIBLE METALLIC CONDUIT AND MATCHED CONNECTORS. NO FLEXIBLE CONDUIT SHALL BE EXPOSED IN FINISHED ROOMS. EACH MOTOR SHALL HAVE DISCONNECT SWITCH OR MANUAL STARTER INSTALLED PER MECHANICAL/ELECTRICAL SCHEDULE AHEAD OF MOTOR OR MOTOR MAGNETIC STARTER. THE ELECTRICAL CONTRACTOR SHALL PROVIDE CONTROL AND INTERLOCK WIRING AS SPECIFICALLY INDICATED ON THE DRAWINGS. ALL OTHER CONTROL WIRING REQUIRED FOR OPERATION OF THE SYSTEMS SHALL BE PROVIDED BY THE HEATING CONTRACTOR.

19. ELECTRICAL DISTRIBUTION EQUIPMENT

SAFETY SWITCHES, STARTERS, CONTACTORS & TIMECLOCKS:

ALL SAFETY SWITCHES SHALL BE SAFETY TYPE, QUICK MAKE AND QUICK BREAK, EXTERNALLY OPERATED, HEAVY DUTY (TYPE HD) AS MANUFACTURED BY SQUARE D. PROVIDE NEMA 1 OR NEMA 3R ENCLOSURES AS REQUIRED. SIZE FOR LOAD UNLESS INDICATED LARGER ON DRAWINGS.

STARTERS SHALL BE ALLEN BRADLEY. STARTERS, IN GENERAL, SHALL BE EQUAL TO THAT INDICATED BELOW UNLESS OTHERWISE INDICATED ON THE PLANS:

1 PHASE MANUAL STARTER IN FINISHED AREAS

ALLEN BRADLEY BUL. 600TKX109 FLUSH MOUNTED, 2 POLE TOGGLE SWITCH TYPE WITH NEON PILOT; (FOR STARTERS SURFACE MOUNTED TO EQUIPMENT, PROVIDE SAME EXCEPT BUL. 600 TAX109 NEMA 1.

3 PHASE COMBINATION MAGNETIC STARTERS WITH DISCONNECT

SIZE 1 MINIMUM, EQUAL TO ALLEN BRADLEY BUL. 512, NEMA I ENCLOSURE.

FIFIELD | PIAKER | ELMAN
ARCHITECTS, PC

740 Broadway, Suite 601
New York, NY 10003
tel 212 979 9272
www.fpe-architects.com

NO USE, REPRODUCTION OR DISSEMINATION MAY BE MADE OF THIS DRAWING & CONCEPTS SET FORTH HEREON WITHOUT THE PRIOR WRITTEN CONSENT OF

FIFIELD PIAKER ELMAN ARCHITECTS P.C.
COPYRIGHT © 2023

MEP CONSULTANT:
AVCON
ENGINEERING PC

AVCON ENGINEERING
580 8TH AVE, 14TH FLOOR
NEW YORK, NY 10018
PH: (646) 572-0488

Project:
CHABAD DOWNTOWN

30 WALL STREET
BINGHAMTON, NY 13901

No:	Description:	Date:
06	100% CD SET / BID AND PERMIT	08/19/25
05	100% REVIEW SET	06/16/25
04	95% CD SET	01/20/25
03	80% COORDINATION SET	08/07/24
02	ISSUED FOR PROGRESS	12/01/23
01	ISSUED FOR REVIEW	10/05/23

Revisions:

Job No: 10015
Scale: AS SHOWN
Date: 10/02/23
Drawn: TL

Sheet Title:
ELECTRICAL SPECIFICATIONS I

Drawing No.:
E-800

ALL MAGNETIC STARTERS SHALL BE EQUIPPED WITH EXTERNAL PILOT LIGHTS (COLOR AS DIRECTED), EXTERNAL RESET BUTTON, EXTERNAL NON- FUSED DISCONNECT SWITCH AND EXTERNAL HOA SELECTOR SWITCHES IN COVER AND WITH AUXILIARY CONTACTS AND WITH FUSED CONTROL TRANSFORMERS. ALL STARTERS SHALL BE SIZED ACCORDING TO LOAD BEING SERVED. MANUAL AND MAGNETIC STARTERS THERMAL OVERLOAD ELEMENTS SHALL BE RATED BETWEEN 115% AND 125% FULL LOAD CURRENT OR AS CALLED FOR UNDER NEC. COORDINATE OVERLOAD REQUIREMENTS WITH RESPECTIVE EQUIPMENT MANUFACTURER PRIOR TO INSTALLATION.

MULTI-PURPOSE TIME CLOCKS SHALL BE EQUAL TO TORK #T930L-E (OR EQUAL BY PARAGON, INTERMATIC). TIME CLOCKS SHALL BE PHOTOCELL INITIATED, 7-DAY, 24 HOUR WITH EXTERNAL ACCESSIBILITY OF OVERRIDE CONTROLS. UNIT SHALL BE 3 ZONE (1-TIMER CONTROL ONLY, 1-PHOTOCELL CONTROL ONLY AND 1-PHOTOCELL CONTROL ON/TIMER CONTROL OFF). PROVIDE ALL REQUIRED EXTERNAL CONTACTORS, RELAYS, ETC. TO RENDER THE CONTROL SYSTEM FULLY OPERATIONAL. VERIFY ZONE CONTROL REQUIREMENTS IN FIELD PRIOR TO ROUGH-IN. PROVIDE POWER CARRYOVER.

TRANSFORMERS SHALL BE OPEN VENTILATED, DRY TYPE, CLASS H INSULATION, 150°C TEMPERATURE RISE. WINDINGS SHALL BE COPPER. PRIMARY AND SECONDARY WINDING SHALL BE DELTA AND WYE TYPE INCLUDING STEP UP TRANSFORMER OTHER TYPES OF WINDING SHALL BE NOTED. PRIMARY TAPS (6-2 ½% TAPS, 2 ABOVE AND 4 BELOW RATED VOLTAGE) SHALL BE PROVIDED ADJUST FOR REQUIRED VOLTAGE.

20. ELECTRICAL PANELBOARDS

SUBJECT TO COMPLIANCE WITH REQUIREMENTS, PROVIDE PANELBOARD PRODUCTS OF ONE OF THE FOLLOWING (FOR EACH TYPE AND RATING OF PANELBOARD AND ENCLOSURE): SQUARE D COMPANY, GENERAL ELECTRIC COMPANY, SIEMENS/ITE, WESTINGHOUSE/CUTLER-HAMMER.

PANELBOARDS SHALL BEAR UL LABELS FOR THEIR SPECIFIC APPLICATIONS. PANELBOARDS SHALL BE SUITABLE FOR SERVICE VOLTAGE WITH NUMBER OF BRANCH CIRCUITS OF CAPACITY SCHEDULED. UNLESS OTHERWISE INDICATED, PANELBOARDS AND SECTIONS THEREOF, IF ANY, SHALL HAVE MAIN LUGS ONLY OF CAPACITY EQUAL TO, OR GREATER THAN, THE RATING OR SETTING OF THE OVER THE CURRENT PROTECTIVE DEVICE NEXT BACK ON THE LINE. ALL CIRCUIT BREAKER PANELBOARD BUS ASSEMBLIES SHALL BE OF THE DISTRIBUTED (SEQUENCE) BUSSING TYPE THROUGHOUT, SO THAT ANY 2 ADJACENT SINGLE POLE BREAKERS AND/OR SPACES SHALL BE REPLACEABLE BY A 2 POLE INTERNAL COMMON TRIP BREAKER, AND ANY 3 ADJACENT SINGLE POLE BREAKERS AND/OR SPACES SHALL BE REPLACEABLE BY A 3 POLE INTERNAL COMMON TRIP BREAKER, 15 AMP THROUGH 70 AMP INCLUSIVE, WITHOUT DISTURBING ANY OTHER BREAKER. ALL PANELBOARDS SHALL BE UL LISTED AND LABELED FOR USE AS SERVICE ENTRANCE EQUIPMENT WHERE BEING USED AS SUCH.

DISTRIBUTION PANELS SHALL BE EQUAL TO SQUARE D I-LINE.

208Y/120V LIGHTING AND APPLIANCE PANELBOARDS SHALL BE EQUAL TO SQUARE D NQOD WITH BOLT-ON BRANCH BREAKERS.

ALL BUSSING SHALL BE COPPER.

ALL BRANCH CIRCUIT BREAKERS SHALL BE FULL AMBIENT COMPENSATED THERMAL MAGNETIC MOLDED CASE WITH QUICK-MAKE AND QUICK-BREAK ACTION AND POSITIVE HANDLE TRIP INDICATION, BOTH ON MANUAL AND ON AUTOMATIC OPERATION. BREAKERS SHALL BE OF THE OVER-THE-CENTER TOGGLE OPERATING TYPE WITH THE HANDLE GOING TO A POSITION BETWEEN "ON" AND "OFF" TO INDICATE AUTOMATIC TRIPPING.

ALL CIRCUIT BREAKERS SHALL BE FULL SIZE. "TANDEM" OR "SPLIT" BREAKERS SHALL NOT BE PERMITTED. ALL MULTI-POLE BREAKERS SHALL HAVE INTERNAL COMMON TRIP WITH ALL LOAD SIDE BOX LUGS OF ONE BREAKER IN THE SAME GUTTER. ALL CIRCUIT BREAKERS SHALL HAVE SEALED CASES TO PREVENT TAMPERING. ALL 15 AND 20 AMPERE BRANCH CIRCUIT BREAKERS SHALL BE UL LISTED AS SWD (SWITCHING DUTY). ALL 15-70 AMPERE BRANCH CIRCUIT BREAKERS SHALL BE HACR TYPE. ALL GFI CIRCUIT BREAKERS SHALL BE UL CLASS A WITH MAXIMUM THRESHOLD OF 5 MA. ALL BRANCH CIRCUIT BREAKERS SERVING ALL BALLASTED (FLUORESCENT/HID) LIGHTING LOADS SHALL BE HID RATED.

PROVIDE ALL ELECTRICAL DISTRIBUTION RELATED EQUIPMENT WITH APPROPRIATELY BRACED BUSSING AND PROPERLY RATED BREAKERS, FUSES, ETC. FOR THE AVAILABLE FAULT CURRENTS.

IN EXISTING BUILDINGS WHERE FAULT CURRENT VALUES ARE NOT INDICATED ON DRAWINGS, COORDINATE WITH EXISTING "UPSTREAM" DISTRIBUTION EQUIPMENT PROVIDE EQUIPMENT AIC RATINGS TO MEET OR EXCEED SAME.

FILL OUT PANELBOARD'S CIRCUIT DIRECTORY CARD UPON COMPLETION OF INSTALLATION WORK. DIRECTORIES SHALL BE NEATLY TYPEWRITTEN. ALL PANELBOARD DIRECTORIES SHALL INCLUDE THE ACTUAL ROOM NAMES/NUMBERS THAT ARE SELECTED FOR INTERIOR SIGNAGE/DESIGNATION.

21. TELEPHONE AND SYSTEM

FURNISH AND INSTALL A SYSTEM OF CONDUIT RACEWAYS. OUTLET BOXES AND PULL WIRES AS SHOWN ON THE DRAWINGS UNLESS OTHERWISE NOTED ON PLANS. TELEPHONE SWITCHING APPARATUS, CONDUCTORS, INSTRUMENTS, MISCELLANEOUS EQUIPMENT AND APPURTENANCES ARE NOT PART OF THIS CONTRACT AND WILL BE PROVIDED AND INSTALLED BY NY&CO.

OUTLET BOXES TO BE 4" SQUARE MINIMUM WITH SINGLE DEVICE COVER AND TELEPHONE PLATE.

CONDUIT RUNS FROM TELEPHONE EQUIPMENT BOARD IN THE BACK OF HOUSE FOR TELEPHONE AND DATE LINES TO CASHWRAP ARE TO BE CONTINUOUS WITH NO JUNCTION BOXES EXCEPT AS NOTED OTHERWISE ON DRAWINGS.

ALL PULL WIRES ARE TO BE LABELED FOR PURPOSE DESIGNATED.

NO OTHER CIRCUITS ARE TO BE RUN IN SAME CONDUIT FEEDING ISOLATED GROUND RECEPTACLES.

TESTS AND ADJUSTMENTS

ALL CONNECTIONS AT PANELS, LIGHTING, CONTACTORS AND SWITCHES ARE TO BE MADE, ALL SPLICES COMPLETE, ALL FUSES IN PLACE AND ALL CIRCUITS CONTINUOUS FROM POINT OF SERVICE CONNECTION TO ITS FINAL DESTINATION, AND ALL COVERS AND PLATES INSTALLED PRIOR TO THE TIME OF FINAL INSPECTION BY NY&CO PROJECT MANAGER.

UPON COMPLETION OF THE WORK, ALL PARTS OF THE ELECTRICAL INSTALLATION SHALL BE TESTED AND PROVED FREE OF UNWANTED GROUNDS AND OTHER DEFECTS.

ALL OVERLOAD DEVICES, INCLUDING EQUIPMENT FURNISHED UPON OTHER CONTRACTS, SHALL BE SET AND ADJUSTED TO SUIT THE LOAD CONDITIONS.

TEST AND MAKE CONNECTIONS/ ADJUSTMENTS FOR PHASE BALANCING.

THIS CONTRACTOR IS TO BALANCE THE VOLTAGE LEAVING THE STEPDOWN TRANSFORMER TO PROVIDE A SECONDARY VOLTAGE OF 120 MINIMUM TO125 VOLTS MAXIMUM BY ADJUSTING THE TRANSFORMER TAPS ONCE ALL THE FINAL CONNECTIONS HAVE BEEN MADE TO THE LOW VOLTAGE PANELBOARD. INCLUDE FINAL BALANCE REPORT WITH AS-BUILT DRAWINGS.

CLEANING

AT THE END OF THE PROJECT, THIS CONTRACTOR SHALL CLEAN ALL EQUIPMENT, INCLUDING LIGHT FIXTURES, TO THE SATISFACTION OF NY&CO. ALL DUST, DIRT, DEBRIS, AND FOREIGN MATTER SHALL BE REMOVED FROM ALL EQUIPMENT.

FIFIELD |PIAKER |ELMAN
ARCHITECTS, PC

740 Broadway, Suite 601
New York, NY 10003
tel 212 979 9272
www.fpe-architects.com

NO USE, REPRODUCTION OR DISSEMINATION MAY BE MADE OF THIS DRAWING & CONCEPTS SET FORTH HEREON WITHOUT THE PRIOR WRITTEN CONSENT OF

FIFIELD PIAKER ELMAN ARCHITECTS P.C. COPYRIGHT © 2023

MEP CONSULTANT:
AVCON ENGINEERING PC

AVCON ENGINEERING
580 8TH AVE, 14TH FLOOR
NEW YORK, NY 10018
PH: (646) 572-0488

Project:
CHABAD DOWNTOWN

30 WALL STREET
BINGHAMTON, NY 13901

No:	Description:	Date:
06	100% CD SET / BID AND PERMIT	08/19/25
05	100% REVIEW SET	06/16/25
04	95% CD SET	01/20/25
03	80% COORDINATION SET	08/07/24
02	ISSUED FOR PROGRESS	12/01/23
01	ISSUED FOR REVIEW	10/05/23

Revisions:

Job No: 10015
Scale: AS SHOWN
Date: 10/02/23
Drawn: TL

Sheet Title:
ELECTRICAL SPECIFICATIONS II

Drawing No.:
E-801